June 21, 1927.

1,633,521

W. EDWARDS

AUTOMATIC SWITCH

Filed Feb. 19, 1925

Fig. 1.

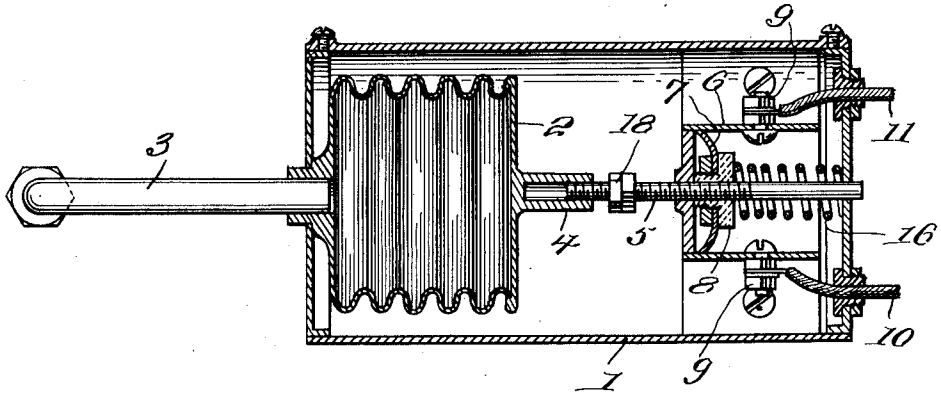

Fig. 2.

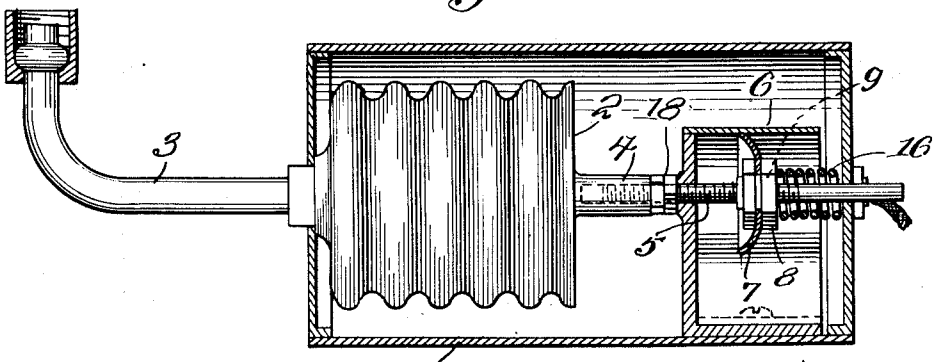

Fig. 3.

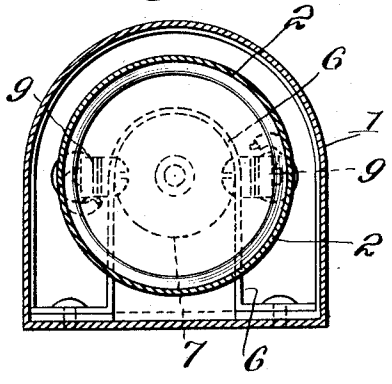

Fig. 4.

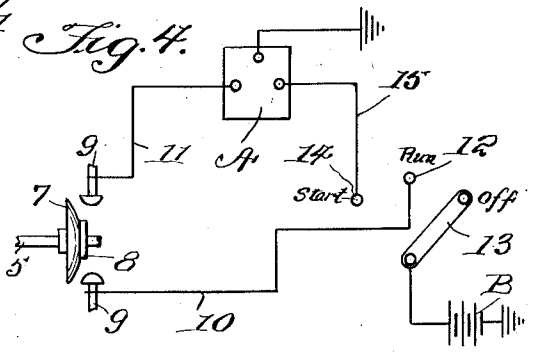

William Edwards
INVENTOR

BY Victor J. Evans
ATTORNEY

WITNESS: J. L. Wright

Patented June 21, 1927. 1,633,521

UNITED STATES PATENT OFFICE.

WILLIAM EDWARDS, OF ROCK SPRINGS, WYOMING.

AUTOMATIC SWITCH.

Application filed February 19, 1925. Serial No. 10,395.

This invention relates to an automatically operated switch which will automatically break an electric circuit when pressure in a device reduces to a low point, the general object of the invention being to provide an expansible chamber which is in communication with the oiling system of an internal combustion motor and which is attached to a switch located in the ignition circuit so that the circuit will be broken when the pressure in the oiling system drops to a dangerous low point and thus prevent damage to the motor.

Another object of the invention is to provide means whereby the motor can be initially supplied with current while the automatic switch is open so as to cause the oil pressure to close said switch and then to connect the circuit in which the automatic switch is located with the ignition circuit.

This invention also consists in certain other features of construction and in the combination and arrangement of the several parts, to be hereinafter fully described, illustrated in the accompanying drawings and specifically pointed out in the appended claim.

In describing my invention in detail, reference will be had to the accompanying drawings wherein like characters denote like or corresponding parts throughout the several views, and in which:—

Figure 1 is a sectional view through the device.

Figure 2 is a view taken at right angles to Figure 1 with parts in section and parts in elevation.

Figure 3 is a section on line 3—3 of Figure 2.

Figure 4 is a diagrammatic view of the circuit.

In these views, 1 indicates a housing in which is located an expansible member 2 which forms a chamber which is adapted to be connected with the oil system of an internal combustion motor by the pipe 3 so that said chamber will be supplied with oil from the system when the oil pump is in operation. The inner end of the member 2 is provided with a threaded socket 4 to receive one end of the threaded stem 5 which passes into a switch housing 6 arranged in the casing 1. A switch member 7 is carried by a nut 8 on the stem 5 and the switch terminals 9 are carried by the housing 6 and the conductors 10 and 11 are connected with these terminals and pass through the end of the casing 1, one terminal being connected with the motor or other device which is shown at A in Figure 4 and the conductor 10 being connected with a terminal 12 which is adapted to be engaged by a switch 13 which is connected with the source of supply, shown at B. A terminal 14 is connected with the member A by the conductor 15. A spring 16 in the housing 6 tends to hold the switch 7 in open position and the member 2 contracted.

From the foregoing it will be seen that as long as the oil pump is working and oil is supplied to the same, the oil pressure in the member 2 will expand the same and thus hold the switch 7 in engagement with the terminals 8 so that the circuit to the member A will be closed as long as the switch 13 is in engagement with the terminal 12. If the pump should cease to operate or a leak occur in the line or the oil level become low the pressure in member 2 would be reduced so that said member would be contracted by the spring 16 and thus the switch would be separated from the terminals 9 and thus the circuit to the member A would be broken so that said member would cease to function. This would prevent damage to the member A through lack of lubricant. In starting the motor or member A the switch 13 is placed in engagement with the terminal 14 so as to supply current to the member A while the automatic switch 7 is in automatic position but as soon as the motor or member A is in actuation and the oil pump is working the switch 13 is moved into engagement with the terminal 12 so that the ignition current must pass through the automatic switch and thus when the switch is moved to open position the ignition circuit will be broken. I provide nuts 18 on the stem 5 which act as an adjustable stop for limiting the expansion movement of the member 2.

It is thought from the foregoing description that the advantages and novel features of my invention will be readily apparent.

I desire it to be understood that I may make changes in the construction and in the combination and arrangement of the several parts, provided that such changes fall within the scope of the appended claim.

What I claim is:—

A device of the class described including a housing, an expansible member arranged

within the housing and forming a chamber which is adapted to be placed in communication with the oiling system of an internal combustion motor, a switch housing in the main housing in alignment with an expansible member, a threaded socket on one end of the expansible member, a threaded stem movable through one end of the switch housing and adjustably connected to the socket, nuts adjustable on the stem and disposed between the switch housing and the threaded socket for adjusting the limit of movement of the expansible member, a flexible switch member adjustable on the stem within the switch housing, oppositely disposed contacts carried by the switch housing and arranged upon opposite sides of the switch member and a coil spring mounted upon the stem within the switch housing and disposed upon one end of the main housing and the switch member whereby to normally retain the expansible member in a contractive position and the switch member out of engagement with the contacts.

In testimony whereof I affix my signature.

WILLIAM EDWARDS.