(No Model.) 3 Sheets—Sheet 1.

W. K. GORDON.

AUTOMATIC DUMPING CAGE.

No. 594,736. Patented Nov. 30, 1897.

FIG. 1.

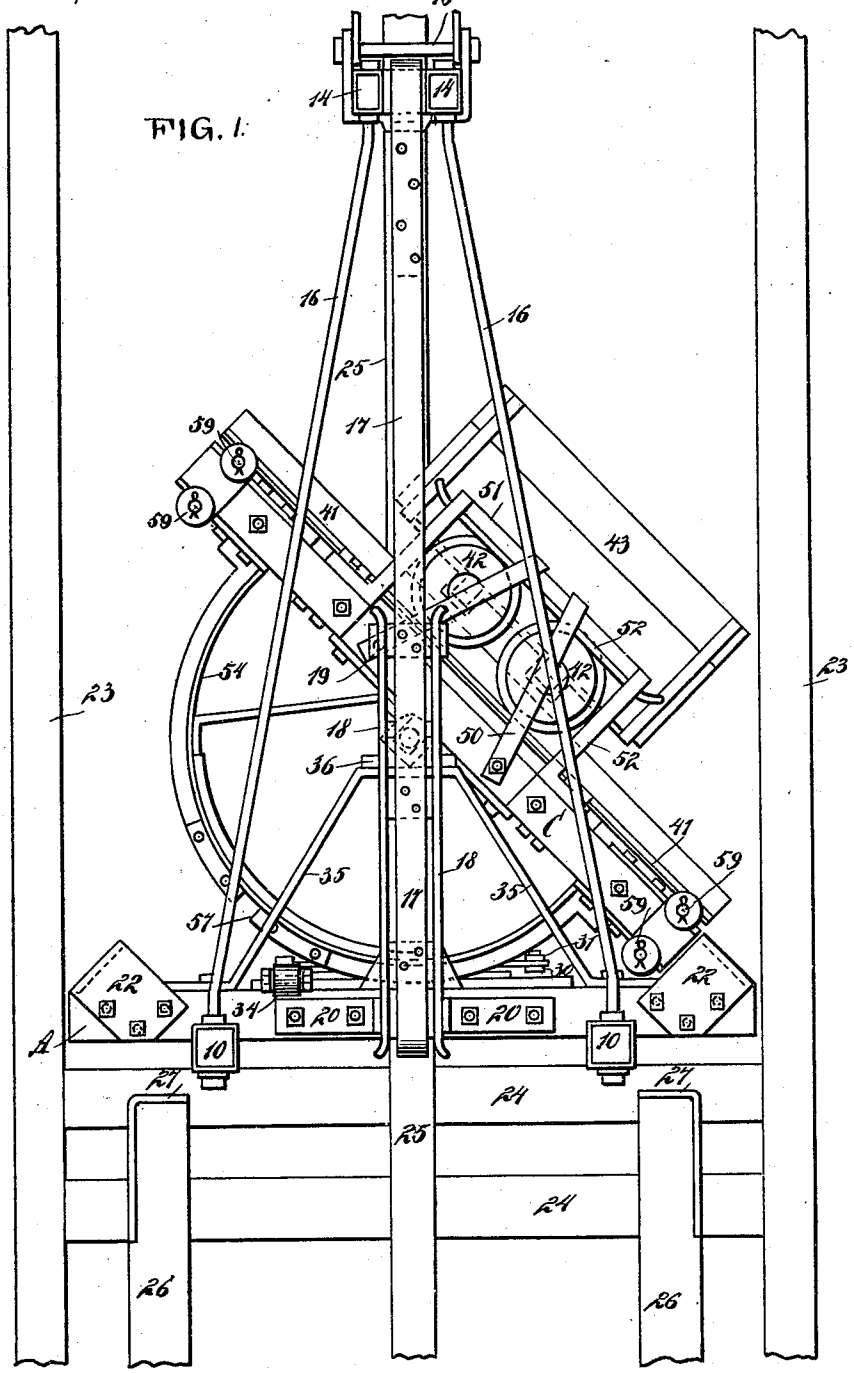

WITNESSES:

Donny Twitchell

J. Ackerson

INVENTOR

W. K. Gordon.

BY Munn & Co

ATTORNEYS.

THE NORRIS PETERS CO., PHOTO-LITHO., WASHINGTON, D. C.

(No Model.) 3 Sheets—Sheet 2.

W. K. GORDON.

AUTOMATIC DUMPING CAGE.

No. 594,736. Patented Nov. 30, 1897.

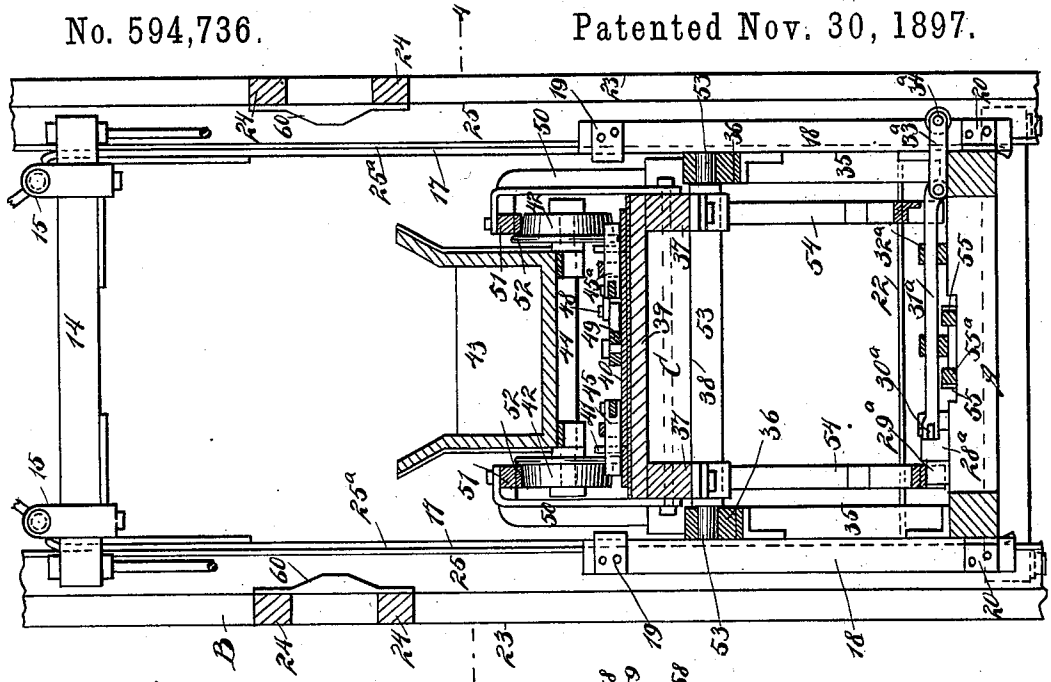

FIG. 2.

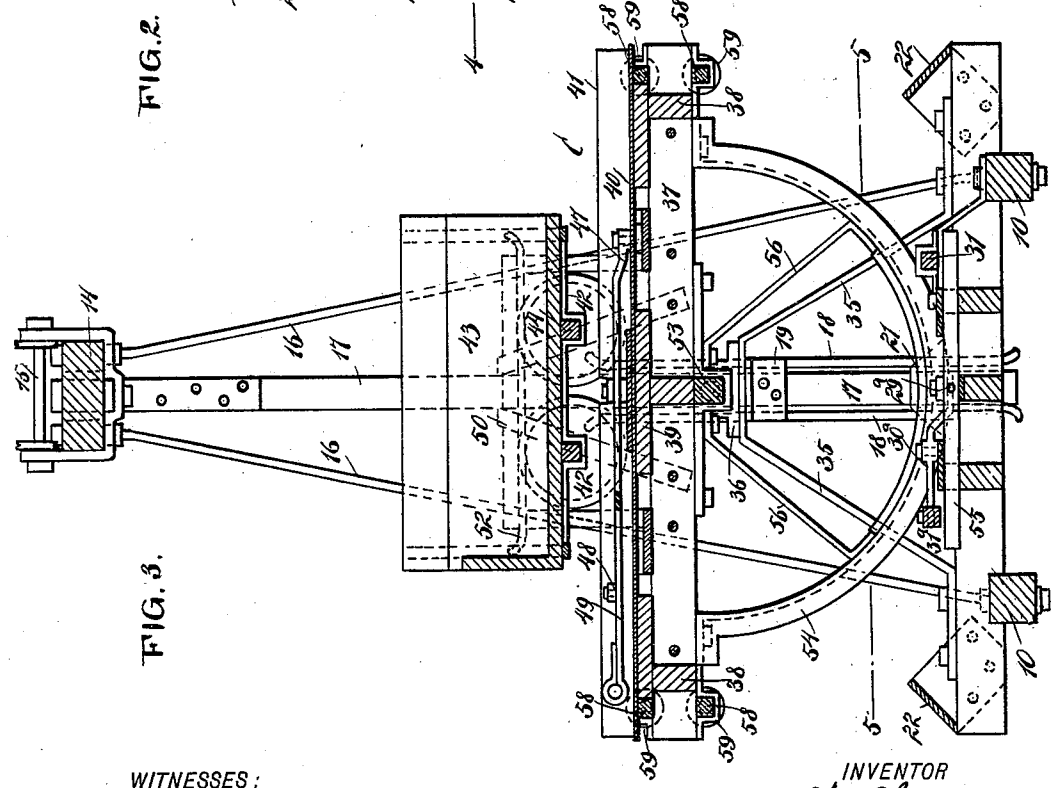

FIG. 3.

WITNESSES:

Donny Twitchell

J. Fred Acker

INVENTOR

W. K. Gordon

BY Munn & Co

ATTORNEYS.

THE NORRIS PETERS CO., PHOTO-LITHO., WASHINGTON, D. C.

(No Model.) 3 Sheets—Sheet 3.

W. K. GORDON.

AUTOMATIC DUMPING CAGE.

No. 594,736. Patented Nov. 30, 1897.

FIG. 4.

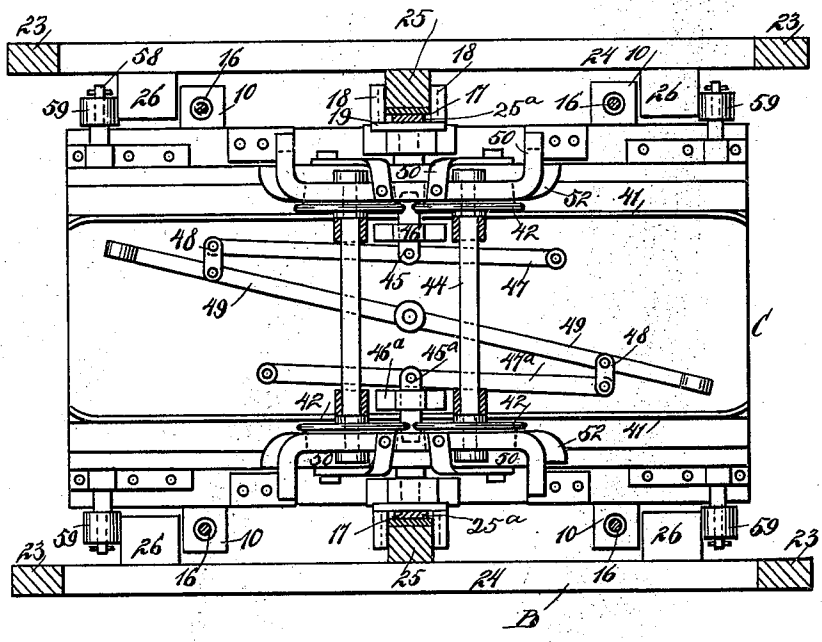

FIG. 5.

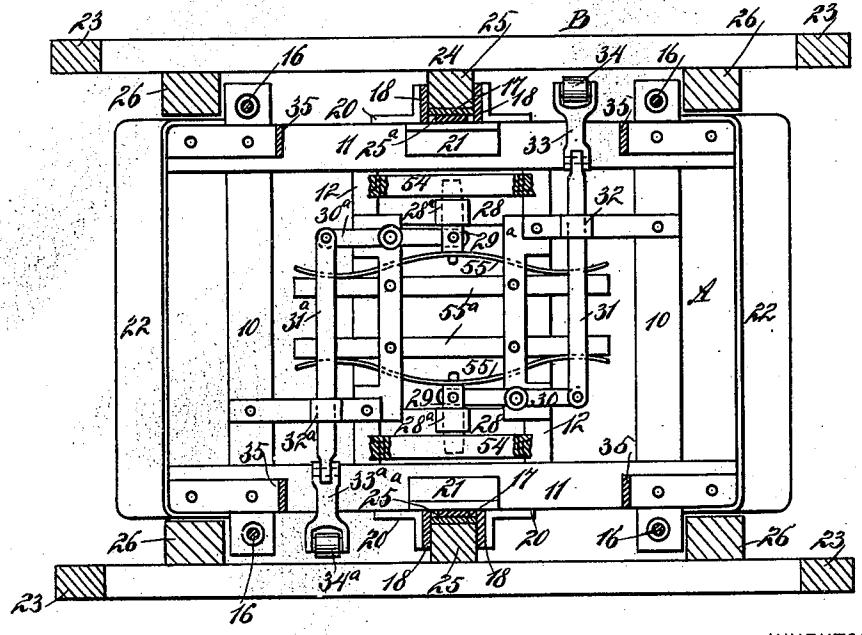

WITNESSES:

Donn Twitchell

J. W. de Ackers

INVENTOR

W. K. Gordon.

BY

ATTORNEYS.

THE NORRIS PETERS CO., PHOTO-LITHO., WASHINGTON, D. C.

UNITED STATES PATENT OFFICE.

WILLIAM K. GORDON, OF THURBER, TEXAS.

AUTOMATIC DUMPING-CAGE.

SPECIFICATION forming part of Letters Patent No. 594,736, dated November 30, 1897.

Application filed June 25, 1897. Serial No. 642,345. (No model.)

To all whom it may concern:

Be it known that I, WILLIAM KNOX GORDON, of Thurber, in the county of Erath and State of Texas, have invented a new and Improved Automatic Dumping-Cage, of which the following is a full, clear, and exact description.

My invention relates to an improvement in dumping-cages especially adapted for use in the shafts of coal and other mines.

The object of the invention is to so construct and hang the dumping-platform of the cage that it will obviate all pounding and racking of the guides and tower-building, the said platform turning upon a true circle.

Another object of the invention is to provide for automatically restoring the platform to a horizontal or carrying position after it has been dumped and at the same time locking the platform and also to provide means for automatically unlocking the platform, enabling it to dump.

Another object of the invention is to provide a simple and effective means for locking a car upon the platform.

A further object of the invention is to provide a platform capable of dumping at either end and means for preventing coal from spilling from the platform or the car into the shaft and endangering the lives of the "cagers" below.

The invention consists in the novel construction and combination of the several parts, as will be hereinafter fully set forth, and pointed out in the claims.

Reference is to be had to the accompanying drawings, forming a part of this specification, in which similar characters of reference indicate corresponding parts in all the figures.

Figure 1 is a side elevation of the improved cage. Fig. 2 is a central transverse section through the cage and a portion of the shaft. Fig. 3 is a vertical longitudinal section through the cage. Fig. 4 is a transverse section on the line 4 4 of Fig. 2, the body of the car having been broken away; and Fig. 5 is a transverse section taken substantially on the line 5 5 of Fig. 3.

The fixed platform A of the cage consists of cross-beams 10, upon which longitudinal beams 11 are laid and secured, and the cross-beams extend beyond the longitudinal beams, while cross-bars 12 are located between the cross-beams 10. The top or crown beam 14 of the cage may be made in one piece, as shown, or may be constructed of a number of pieces. This crown-beam 14 is provided with a clevis 15 for attachment to the hoisting ropes, chains, or links. Each end of the crown-beam 14 is connected by brace-rods 16 with the outer extremities of the cross-beams 10, as shown in Figs. 1 and 3. A guide-plate 17 is firmly secured to the outer side face of the fixed platform A at the center, and the said guide-plate is secured at the top to the ends of the crown-beam 14. Guide-strips 18 are located at each side of each guide-plate 17, at the lower end of the latter, as illustrated in Figs. 1, 4, and 5, the guide-strips 18 extending outward from the sides of the fixed platform A and are separated a predetermined distance from the guide-plates. The guide-strips 18 are of metal and are attached to the guide-plates at the top by cross-bars 19 and are secured to the platform A at the bottom by brackets 20, (shown in Fig. 5,) secured to the outer faces of the platform, and likewise by a bracket 21, secured on the platform and to the inner face of both the guide-plates and the inner edges of the guide-strips, as shown in Fig. 5.

At each end of the fixed platform A a shield 22 is secured, extending from side to side, and these shields are given a downward and outward inclination, as is particularly shown in Figs. 3 and 5. The shaft B is represented as consisting of two side sections which may be properly connected, and each side section comprises end uprights 23, connected by horizontal beams 24, and an upright beam 25, which is secured to the inner faces of the horizontal beams 24 at or near their centers, as illustrated in Fig. 5. Each upright beam 25 serves as a guide for the cage and is provided with a metal wear-plate 25^a. In addition to the uprights and beams above mentioned in the construction of the shaft two shorter uprights 26 are located, one at each side of the guide-beam 25, being also on the inner portion of the shaft, and the uprights 26, if necessary, may be carried from the bottom of the shaft or may stop at any point in the length of the same, but of necessity the side uprights 26 terminate below the point where the cage is to discharge its load, as

illustrated in Fig. 1. In practice the uprights need not be any longer than required to bring the dumping-platform of the cage to its horizontal position, such being the function of the said uprights, but auxiliary devices may be employed to assist the uprights in restoring the dumping-platform to its carrying position. Longitudinal plates 28 are secured to the cross-bars 12 at each side of the fixed platform A, and on each of the plates 28 a box or a bearing 28^a is secured. A bolt 29 is held to slide in one of the boxes or bearings, and a bolt 29^a has movement in the opposing box or bearing. The bolt 29 at its inner end is pivotally connected with a lever 30, fulcrumed upon a suitable support, and the outer end of the lever 30 is pivotally attached to a link 31, which extends, for example, toward the right-hand side of the fixed platform A and is connected with an arm 33, which extends beyond the right-hand side of the platform and carries a friction-roller 34. The opposite bolt 29^a is pivotally connected to a lever 30^a, the said lever in its turn being pivotally attached to a link 31^a, extending in direction of the left-hand side of the fixed platform A, as is shown in Fig. 5, the outer end of the lever 31^a being attached to an arm 33^a, which is carried beyond the left-hand side of the platform A and is provided with a friction-roller 34^a. The link 31 moves in a suitable guide 32, and a corresponding guide 32^a is provided for the link 31^a. Springs 55 bear one against the inner end of each bolt 29 and 29^a, the said springs also having bearing against longitudinal bars 55^a, secured upon the cross-bars 12 of the aforesaid fixed platform. The springs 55 tend to hold the bolts in their extreme outer position.

A truss 35 is secured upon the fixed platform A at each side thereof, and each truss is made to carry a box 36. (Shown in Fig. 2.) The cage is provided above the fixed platform A with a dumping-platform C. This dumping-platform usually consists of side beams 37, connected by sills 38 and upper cross-bars 39, upon which a floor 40 is laid. A track 41 is secured longitudinally upon the said floor near each side of the dumping-platform, extending from end to end thereof, as shown in Fig. 4. These tracks 41 are substantially L-shaped in cross-section and receive the wheels 42 of a car 43, the wheels being mounted upon suitable axles 44, attached to the car. The car is held in place on the platform by means of bolts 45 and 45^a, which bolts are adapted to extend through openings in the upright portions of the rails between the wheels of the car. The bolt 45 has movement in a bearing 46 and the bolt 45^a in a bearing 46^a, as shown in Fig. 4. The bolt 45 is attached to a lever 47, near the center of the latter, the lever being fulcrumed at one end on the flooring of the dumping-platform or to other suitable support, and the bolt 45^a is in like manner connected with a lever 47^a, which is pivoted to the dumping-platform at the end opposite to the pivoted end of the lever 47, so that the pivot of one lever is near one end of the dumping-platform, while the pivot of the other lever is near the opposite end of the said platform. The front ends of the two levers 47 and 47^a are pivotally connected by links 48 with a manipulating-lever 49, which is usually operated by hand, the manipulating or hand lever 49 being pivoted at its center, and its ends extend beyond the links 48. By the operation of the hand-lever 49 the bolts 45 and 45^a may be carried to the position to lock the car on the platform or be withdrawn from locking engagement with the car.

At the central portion of each side of the dumping-platform C bars 50 are carried upward through the platform and at their upper ends are bent over the platform, the bars 50 at each side of the dumping-platform being connected by a beam or cross-bar 51, to which beam or cross-bar a longitudinal spring 52 is secured. These springs 52 serve as brake-shoes and will bear firmly upon the upper peripheral surfaces of the wheels of the car when the car has been properly placed on the platform, and therefore each group of bars 50 and the spring 52, carried thereby, may be termed a "brake device."

A shaft 53 is secured upon the under side of the dumping-platform at its center, and the shaft is reduced at its extremities to form spindles, which are journaled in the boxes 36, as shown in Fig. 2. Under this construction the dumping-platform has a central pivoted bearing and may work readily without any jar to the cage or to the shaft in which the cage moves. A segment 54 is attached to the under side of the dumping-platform at each side thereof, and the bottom of the segment closely approaches the upper face of the fixed platform A of the cage. Each segment is preferably strengthened by braces 56, (shown in Fig. 3,) and each segment at its lower central portion is provided with an opening 57, adapted when the dumping-platform is in its horizontal position to receive the bolts 29 and 29^a, located on the fixed platform and heretofore described, as shown in Fig. 5.

At a point slightly below that portion of the shaft B at which the platform is to be dumped inclined blocks or projections 60 are secured to the inner face of the shaft, being so located that as the cage is drawn upward the rollers 34 and 34^a, projecting beyond the sides of the fixed platform, will engage with the blocks and force inward the arms to which the rollers are attached and cause the levers connected with said arms to withdraw the bolts 29 and 29^a from engagement with the segments 54, permitting the dumping-platform to be inclined at either end to discharge its load.

Fixed shafts 58 are secured at the top and bottom of each end portion of the dumping-platform, and these shafts are provided at

their outer ends with friction-rollers 59. When the cage is located in a shaft, the guide-plate 17 of the cage will engage with the wear-plates 25ª on the guide-beams 25 of the shaft, while the guide-strips 18, carried by the cage, will engage with the side faces of the said guide-beams 25, as shown in Figs. 4 and 5, and these side faces of the guide-beams may be protected by metal, if desired. When the cage is traveling upward or downward, the rollers 59 at the ends of the dumping-platform will engage with the outer faces of the shorter beams 26, which serve in the capacity of guides for the said dumping-platform while the platform is in its horizontal position. The beams 26, however, have another function. After the load has been dumped and the dumping-platform is yet in its dumping position and the cage is lowered the rollers 59 at the depressed end of the dumping-platform will strike upon the wear-plate 27 of the adjacent short guide-beams 26, and the rollers, moving along the tops of these shorter guide-beams, will gradually restore the dumping-platform to its horizontal position and will then travel down the sides of the said shorter guide-beams. As soon as the dumping-platform has assumed its horizontal position the spring-controlled bolts 29 and 29ª will enter the openings 57 in the segments 54 and lock the dumping-platform in its carrying position.

One of the main features of the invention consists in centrally pivoting the dumping-platform and providing for its being automatically locked in the carrying position, and another essential feature of the invention lies in the shields 22, as shown in Fig. 1, since when the platform is brought to its dumping position the floor of the platform at its depressed end will be in alinement with the upper inclined surface of the shield at the corresponding end of the fixed platform, and the material delivered from the car will pass over this shield and be conducted thereby entirely outside of the shaft, thus preventing the possibility of any of the coal or material carried by the car falling into the shaft and endangering the lives of the cagers below.

Having thus described my invention, I claim as new and desire to secure by Letters Patent—

1. The combination with a cage and a fixed platform, of a dumping-platform fulcrumed above the fixed platform, a segment extended downward from the dumping-platform and an automatically-actuated locking device for said segment.

2. The combination, with a cage, its fixed platform and boxes supported by the fixed platform, of a dumping-platform provided with a central shaft entering the said boxes, segments extending downward to the fixed platform, and locking devices for the segments.

3. The combination, with a cage and its fixed platform, of a dumping-platform centrally fulcrumed above the fixed platform, segments extending downward from the dumping-platform, and spring-controlled bolts capable of being operated in an automatic manner, arranged for locking engagement with the said segments.

4. The combination, with a cage and its fixed platform and shields located at the ends of the fixed platform, having downward and outward inclination and extending from side to side of the platform, of a dumping-platform located above the fixed platform, the floor-section of the said dumping-platform at its ends being arranged to register with the inclined face of one of the said shields when the upper platform is in dumping position.

5. In a cage for mining purposes, a fixed platform and a dumping-platform located above the fixed platform, and inclined shields attached to the end portions of the fixed platform, extending from side to side, the inclination of the shields being such that when the dumping-platform is carried to a dumping position the material will be conducted by the said shields beyond the ends of the fixed platform of the cage, for the purpose described.

6. A cage for mining purposes, consisting of a fixed platform, a dumping-platform pivoted above the fixed platform, guide-plates extending upward from the fixed platform at each side, and guide-strips located at the sides of each guide-plate, extending outwardly at an angle thereto, for the purpose specified.

7. In a cage for mining purposes, the combination, with a dumping-platform, segments attached to said dumping-platform, and a fixed platform over which the segments have movement, of spring-controlled bolts adapted to normally have locking engagement with the said segments, levers connected with the said bolts, and trips for the said levers, extending beyond opposite sides of the said fixed platform, for the purpose described.

8. In a cage for mining purposes, a fixed platform, a dumping-platform supported upon the fixed platform and pivoted to its center, and inclined shields secured at the ends of the fixed platform, having downward and outward inclination and arranged for registry with the floor-section of the depressed end of the dumping-platform, as described.

9. The combination, with a dumping-platform provided with tracks to receive a car, bolts carried by said platform, arranged to enter the space between the wheels of the car, means for operating said bolts, and brakes supported over the side portions of the platform, in a position to engage with the upper portion of the wheels of a car.

WILLIAM K. GORDON.

Witnesses:
THOS. R. HALL,
G. C. HAMILTON.