R. B. BENJAMIN.

CONDUCTOR GRIPPING DEVICE.

APPLICATION FILED MAY 2, 1916.

1,376,066. Patented Apr. 26, 1921.

Fig. 1.

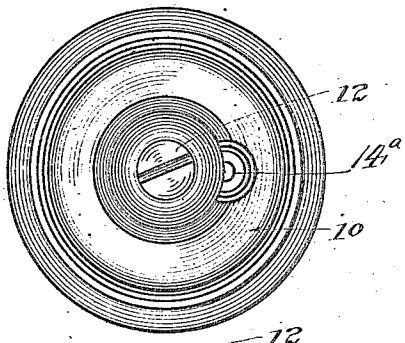

Fig. 2.

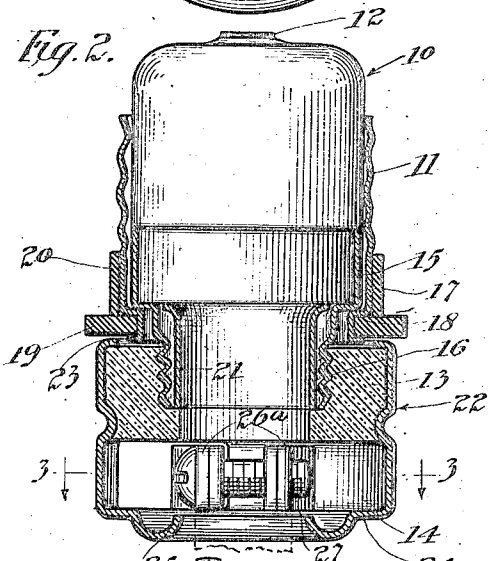

Fig. 3.

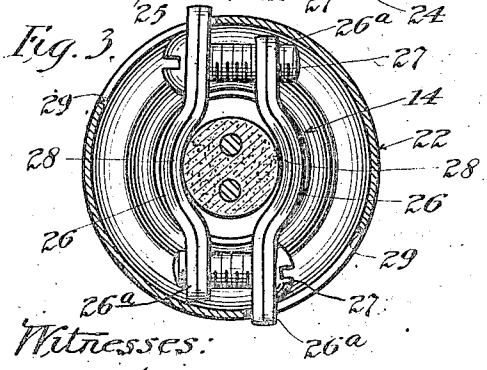

Witnesses:

W. F. Smith

Fig. 4.

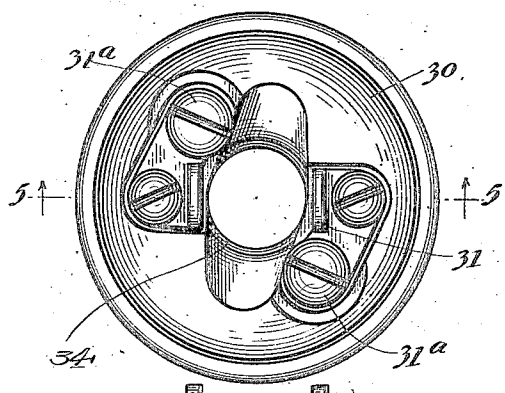

Fig. 5.

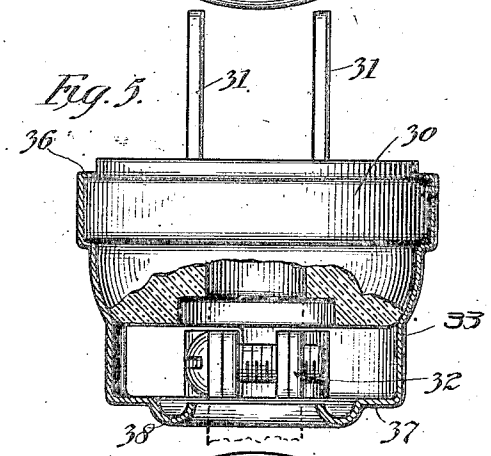

Fig. 6.

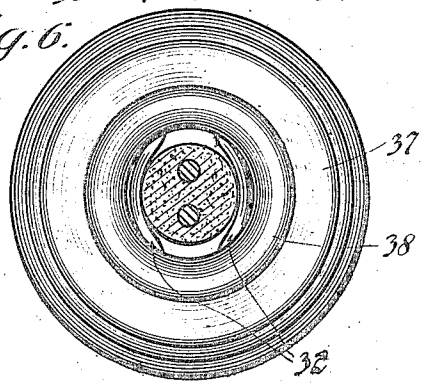

Inventor:

Reuben B. Benjamin

by Jones Addington, Ames & Seibold

Attys.

UNITED STATES PATENT OFFICE.

REUBEN B. BENJAMIN, OF CHICAGO, ILLINOIS, ASSIGNOR TO BENJAMIN ELECTRIC MANUFACTURING COMPANY, OF CHICAGO, ILLINOIS, A CORPORATION OF ILLINOIS.

CONDUCTOR-GRIPPING DEVICE.

1,376,066. Specification of Letters Patent. Patented Apr. 26, 1921.

Application filed May 2, 1916. Serial No. 94,861.

To all whom it may concern:

Be it known that I, REUBEN B. BENJAMIN, a citizen of the United States, residing at Chicago, in the county of Cook and State of Illinois, have invented new and useful Improvements in Conductor-Gripping Devices, of which the following is a full, clear, concise, and exact description, reference being had to the accompanying drawing, forming a part of this specification.

My invention relates to conductor gripping devices.

One of the objects of my invention is to provide an improved cord grip which will securely hold the cord and which will be durable and efficient in use.

In the drawings, in which two embodiments of my invention are shown—

Figure 1 is a plan view of an attachment plug provided with my improved cord grip;

Fig. 2 is an axial section of Fig. 1;

Fig. 3 is a section substantially on the line 3—3 of Fig. 1, showing the cord grip;

Fig. 4 is a plan view of the cap for a separable attachment plug provided with my improved cord grip;

Fig. 5 is a side elevation of the cap shown in Fig. 4, parts being broken away to show the cord grip; and

Fig. 6 is a bottom plan view of Fig. 5.

Referring to the drawings in detail, and first to the form shown in Figs. 1, 2 and 3, the attachment plug here shown comprises an insulating base 10, a shell contact 11, swiveled on the base 10, a center contact 12 which also forms a binding terminal secured on the base 10, and a lower base 13 forming a thumb piece and serving to hold the swiveled shell 11 in place, and also forming a support for the cord grip 14. A center contact which also forms a binding-terminal is shown in my patent Serial No. 1,012,970, dated December 26, 1911. The conductor is led to the binding-terminal 12 through an opening 14^a in the insulating base 10. For connecting the bases 10 and 13 a tubular sheet metal member is provided having a cylindrical portion 15 surrounding the lower end of the base 10, and a portion 16 threaded into the lower base 13. For holding the swiveled shell contact 11 in place the sheet metal connecting member is provided with a shoulder 17 which engages a corresponding shoulder portion 18 on the shell contact 11. For manipulating the shell contact 11 it is provided with an insulating thumb ring 19. To prevent persons accidentally coming in contact with the charged part of the plug the lower part of the shell contact 11 is provided with an insulating band 20. To prevent possible short circuiting between the conductor and the threaded portion 16 an insulating sleeve 21 is inserted within the threaded portion. For housing the cord grip 14 and holding it in position on the lower base 13 a sheet metal cap or housing 22 is provided which is flanged over at 23 to hold it on the base 13, and is flanged inwardly at 24 beneath the cord grip 14. To prevent wear on the cord this flange 24 is rounded over as shown at 25.

The cord grip 14 is located in the chamber formed between the lower base 13 and the flange 24 and comprises a pair of arcuate clamping members 26 having ears 26^a which are secured together by means of screws 27. If desired insulating strips 28 may be placed between the clamping members 26 and the conductor. The housing 22 is provided with a pair of openings 29 on opposite sides to permit access to the heads of the screws 27 for tightening up the cord grip.

The separable plug cap shown in Figs. 4, 5 and 6 comprises an insulating base 30, a pair of contact blades 31 and a pair of binding terminals 31^a supported on the base 30, a cord grip 32 for holding the conductors, to take the strain off the binding terminals, and a cap or housing 33 for housing the cord grip 32 and holding it in position on the base 30. The base 30 has a central opening 34 through which the conductors are led to the binding terminals 31^a. The housing 33 is secured to the base 30 by being flanged over at the top as indicated at 36. The lower part of the housing 33 is flanged inwardly beneath the cord grip, as shown at 37, and the inner portion of this flange is rounded over as shown at 38, to prevent wear on the cord.

Having thus described my invention what I claim as new and desire to secure by Letters Patent is:—

1. An electrical connector comprising a wiring terminal; and conductor-gripping means comprising metallic gripping members, means for drawing said members toward and from each other to grip the con-

ductor, and an insulating lining for said conductor-gripping members.

2. An electrical connector comprising a wiring terminal; and conductor-gripping means comprising sheet-metal gripping members movable toward and from each other to grip the conductor, and insulating members of sheet-material for lining said sheet-metal gripping members.

3. An electrical connector comprising a wiring terminal; and conductor-gripping means comprising a metal strap having a curved portion for embracing and gripping the conductor, and a strap of insulating material lining said metal strap.

In witness whereof, I have hereunto subscribed my name.

REUBEN B. BENJAMIN.