Aug. 29, 1967 L. L. MARRAFFINO 3,338,479

MIXING HEAD WITH SECONDARY FLUID ADAPTED FOR CONNECTION WITH DISCHARGE MEANS OF PRIMARY FLUID CONTAINER

Filed April 4, 1966 2 Sheets-Sheet 1

FIG.1

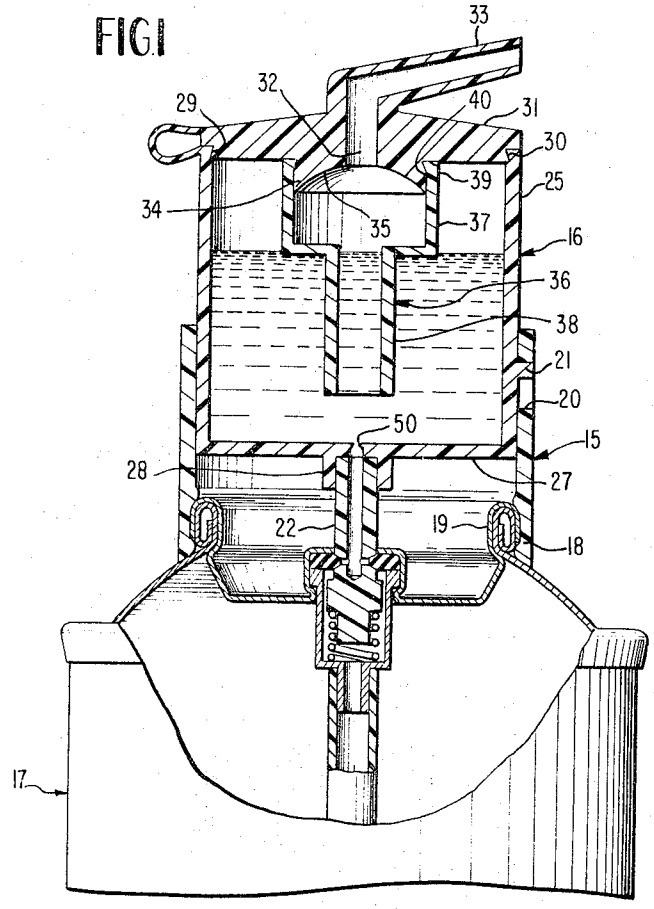

FIG.2

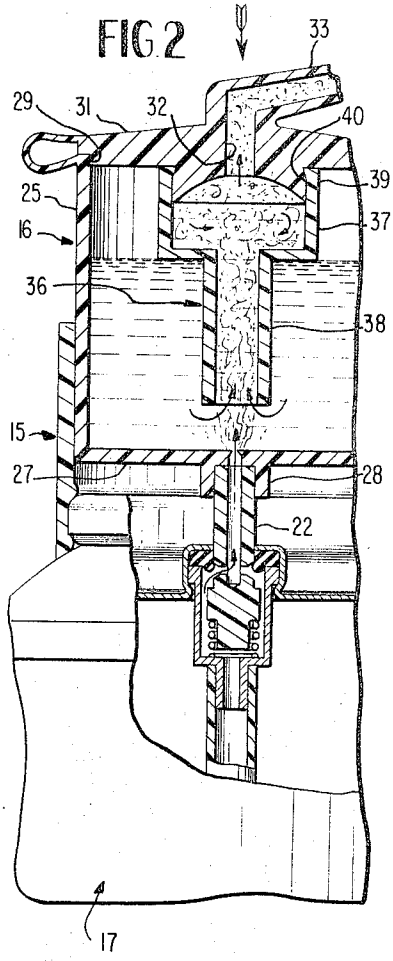

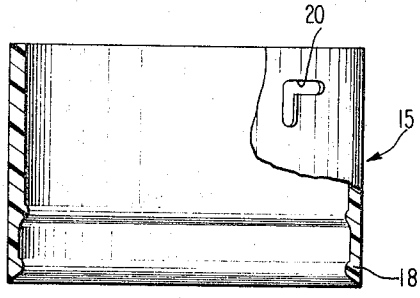

FIG.3

INVENTOR.
LEONARD L. MARRAFFINO

BY Wynne + Finken

ATTORNEYS

Aug. 29, 1967 L. L. MARRAFFINO 3,338,479

MIXING HEAD WITH SECONDARY FLUID ADAPTED FOR CONNECTION WITH DISCHARGE MEANS OF PRIMARY FLUID CONTAINER

Filed April 4, 1966 2 Sheets-Sheet 2

FIG. 4

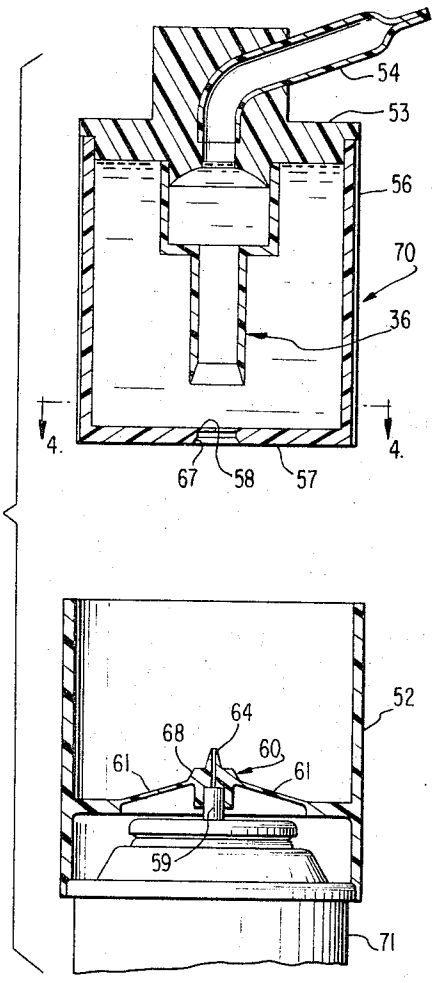

FIG. 5

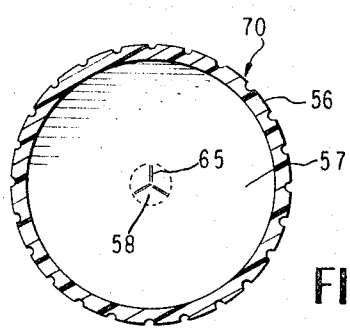

FIG. 6

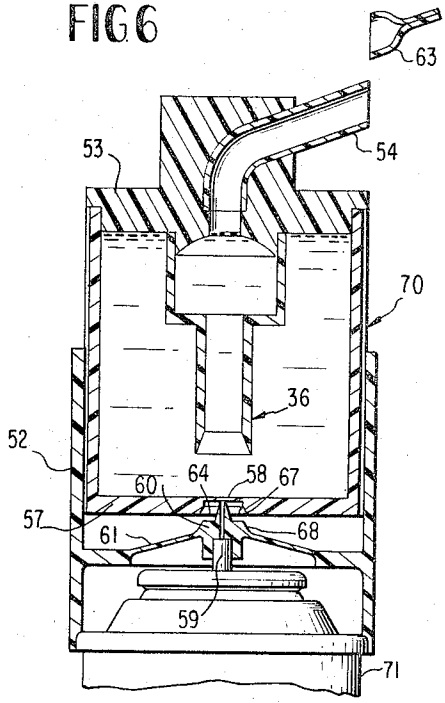

FIG. 7

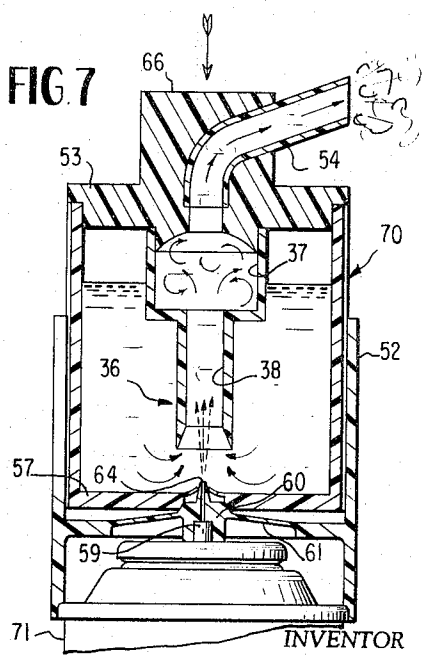

INVENTOR

LEONARD L. MARRAFFINO

BY Wynne + Finken

ATTORNEY

United States Patent Office 3,338,479
Patented Aug. 29, 1967

3,338,479

MIXING HEAD WITH SECONDARY FLUID ADAPTED FOR CONNECTION WITH DISCHARGE MEANS OF PRIMARY FLUID CONTAINER

Leonard L. Marraffino, 1824 NW. 36th Court, Oakland Park, Fort Lauderdale, Fla. 33309

Filed Apr. 4, 1966, Ser. No. 547,688
10 Claims. (Cl. 222—193)

This is a continuation-in-part of application Ser. No. 425,772, filed Jan. 15, 1965, now abandoned.

This invention relates to a mixing head for use with a pressurized aerosol-type container, the mixing head having a housing for containing a secondary fluid to be blended in a mixing means with the primary fluid of the container prior to final dispensing through a spout.

This invention is particularly adapted for use with hair sprays and spray shampoos where it is desired to add a dye or tinting color. Other cosmetic uses are possible. Also, it will be understood that the mixing head may be used to combine foods, paints, and other fluids.

The mixing head may be mounted on the discharge valve of a pressurized shampoo can. When the movable element of the mixing head is moved downwardly to open the discharge valve, shampoo or primary fluid from the can is projected into entraining contact with a hair tinting liquid or secondary fluid. The flow of the two fluids is directed by a small-bore delivery conduit into a large-bore dwell conduit. The violent entrainment action in the delivery conduit followed by a turbulent mixing action in the dwell conduit completely combines and blends the shampoo and hair tinting liquid prior to final dispensing.

The mixing head has a housing which has a predetermined maximum capacity for hair tinting fluid. The user may fill the housing to less than the full amount, if desired. Preferably, the mixing head provides visibility of the contents to enable the user to gauge the degree of application and insure an even treatment.

A sealed capsule is provided by the instant invention for handling secondary fluids, this sealed capsule being equipped with a puncturable membrane in its bottom wall and a top spout having a closed severable terminal end. In use, a guide means is rigidly attached to the pressurized primary fluid container and the sealed capsule slidably inserted into the guide means. The spout is opened by cutting the terminal end therefrom and the membrane is punctured upon downward movement of the capsule into a primary fluid discharge position. Preferably, the guide means flexibly supports an adapter which snugly receives the discharge valve of the container and which has a discharge nozzle or jet means. This nozzle engages the hub of radiating score lines on the membrane and accomplishes a rupture of the membrane with a liquid seal being provided around the membrane by the upper portion of the discharge nozzle. A fluid tight unit is then provided which can be used in the manner previously discussed. Fabricating and distribution advantages of importance are provided by this sealed capsule. A single primary fluid container can be used with a plurality of sealed capsules with a minimum of inconvenience and concern.

These and further objects and advantages of the present invention will become more apparent upon reference to the following specification, appended claims and drawings wherein:

FIG. 1 is a side view in section of the mixing head mounted on a pressurized container;

FIG. 2 is a view similar to FIG. 1 showing the mixing head in a discharge position;

FIG. 3 is a view of the collar which connects the mixing head to the pressurized container;

FIG. 4 is a side view in section of the components of a preferred sealed capsule embodiment in separated condition;

FIG. 5 is a view taken on line 4—4 of FIG. 4;

FIG. 6 is a side view in section of the components of FIG. 4 combined and in condition for rupturing the membrane of the sealed capsule; and

FIG. 7 is a side view in section of the mixing head in use.

Referring now to the drawing, it will be seen that the mixing head includes a collar **15** and a housing **16**, the collar **15** serving to mount the housing **16** on the pressurized primary fluid container **17** by means of a bottom peripheral clamping edge **18** which snaps over and rigidly engages the rim **19** of the container **17**. The collar **15** has a bayonet slot **20** in its sidewall which receives lug **21** extending outwardly from the sidewall of the housing **16**; the horizontal portion of the slot **20** serving as a lock against vertical movement of the housing **16** and the vertical portion of the slot **20** restricting vertical movement to the amount required for actuation of the discharge valve **22**.

The housing **16** provides a secondary fluid chamber and includes a main body portion **25** and a cap **31**. The bottom wall **27** of the main body portion has an apertured socket **28** which snugly receives the discharge valve **22** for actuation thereof. The top of the main body portion **25** provides a large opening to facilitate the measured pouring therein of hair coloring liquid, the top inwardly-facing rim **29** around the opening being notched to provide a wedged interlock with the outwardly-facing bottom rim **30** of the removable cap **31** which closes the mixing head.

The cap **31** has an opening **32** and a spout **33** extending outwardly therefrom. Preferably the bottom opening **32** is surrounded by a bottom annular ring **34** which has a downwardly-facing surface **35** in the form of an upright truncated cone for directing combined primary and secondary fluids through opening **32** and into spout **33**.

A mixing means **36** is connected to and depends from the cap **31** and includes an upper large-bore dwell conduit **37** and a lower small-bore delivery conduit **38**. Preferably the mixing means is a separate element which has a top rim **39** which snaps into a wedged interlock with the outer undercut edge **40** of the annular ring **34** on the cap **31**; this enables the removal of the cap **31** and the mixing means **36** as a unit when filling the main body portion **25**.

To accomplish the desired mixing and dispensing of a completely combined primary and secondary fluid stream, the apertured socket **28** for the discharge valve **22** is vertically centrally aligned with the cap opening **32**. Further, the mixing chamber or means **36** is arranged so that its dwell conduit **37** and delivery conduit **38** are similarly vertically centrally aligned. Of particular importance also is the relative proportions and arrangements of the elements whereby a predetermined peripheral entrainment of the secondary fluid is accomplished by the rapidly flowing primary fluid. The venturi-like action of the mixing head provides the required entrainment in the delivery conduit **38** followed by a turbulent mixing in the dwell conduit **37**. The housing **16**, collar **15** and mixing means **36** are preferably in the form of vertical cylinders, the housing **11** having a height about equal to its diameter, the dwell conduit **37** having a height about one third the height of the housing and a diameter about one half the diameter of the housing and the delivery conduit **38** having a height about the same as the dwell conduit **37** and a diameter about one-third the diameter of the dwell conduit. It will be noted that the delivery conduit terminates directly above and in vertical alignment with the apertured socket **28**.

The mixing head is particularly designed to carry about 2½ ounces of an activating fluid for combination with the primary fluid to produce a hair dyeing material suitable for convenient and safe home and professional use. The housing **16** may be manufactured and sold as a separate item and the collar **15** may be designed with a removable cap to serve the dual purpose of a valve protector and bearing collar. In this manner the user may separately purchase the desired activating fluid as needed and use it with the primary fluid.

As mentioned, the proportions of the mixing head are important. The relative sizes of the openings also affect the operation and consistency of the dispensed mixture. A cylindrical housing having an inside diameter and height of about 1½ to 1¾ inches will function most satisfactorily when the lower end of the delivery conduit **38** terminates about ¼ inch above the orifice **70** at the top of the socket **28**. The bottom orifice **50** is about .030 to .060 inch in diameter and the top orifice **51** in the dome **35** is about .250 inch in diameter.

Research has established the operating characteristics of this invention and of important interest is the fact that a substantial variation of the ¼ inch dimension between orifice **50** and delivery conduit **38** will result in discharge from the nozzle of primarily primary fluid if this dimension is importantly reduced and an initial discharge of secondary fluid or activating fluid if this dimension is importantly increased. In the first instance, little secondary fluid is contacted and entrained resulting in a discharge stream of primary fluid. In the second instance, the power of the primary fluid on discharge from the valve **22** is substantially dissipated before reaching the delivery conduit **38** and no high-speed entraining stream is developed therein.

The entraining stream must have sufficient velocity in the delivery conduit to provide the power for the swirling mixing action produced when the stream reaches the dwell conduit **37** where it spreads out and is guided in its mixing flow by the truncated cone or convex dome-like surface **35** which acts as a baffle.

It will be noted in the diagrammatic showing of FIG. 2 that the entraining stream is visible and through the use of transparent material for the housing **16**, the level of the activating secondary fluid can be easily watched by a professional beautician or by the user to insure even application of the hair coloring material.

Referring now to the preferred embodiment of FIGS. 4–7, a sealed capsule **70** is provided which may be produced and merchandised as a replacement cartridge-type item for use with a container **71** and guide means **52** thereon for controlling vertical movement for valve actuation. Preferably, the capsule **70** is formed of a top member **53** from which extends a spout **54** and to which is integrated through cementing, heat joining and the like, mixing means **36**. This assembly is then joined to the main body portion **56** in a fluid tight manner, thereby providing the sealed capsule. The capsule would be filled with the desired secondary fluid prior to final sealing. A protective member (not shown) could be applied to the bottom wall **57** to protect the puncturable membrane **58** during shipment and merchandising. To adapt the container **71** for use with the sealed capsule **70**, a guide means **52** is provided in which the housing or sealed capsule reciprocates. While it is recognized that the discharge valve **59** could be equipped with the required jet means for accomplishing membrane rupture and a high velocity jet stream of primary fluid, the preferred embodiment provides an adapter **60** for use with the more commonly used discharge valves **59**. This adapter **60** is connected to the rigid guide means **52** by a flexible means **61** which can be in the form of an annular web or spaced radial legs or the like. The function of the flexible means **61** is to support and orient the adapter **60** for firm and fluid-tight housing of the discharge valve **59** as shown in the lower portion of FIG. 4 and to enable vertical movement of the adapter.

In use, the sealed capsule **70** is slid into the guide means **52** as shown in FIG. 6, the terminal end **63** of its spout **54** being severed and the top discharge nozzle **64** of the jet means of the adapter **60** being centrally positioned for rupture of the membrane **58**. FIG. 5 shows radiating score lines **65** from the center or hub of the membrane for facilitating the opening thereof. The vertical sidewall of the main body portion **56** may be fluted to facilitate vertical movement of the capsule **50**. As seen in FIG. 7, further downward movement by pressure on the knob **66** first causes the jet means **64** to puncture the membrane **58** and then form a sealed engagement of the capsule with the adapter. The bottom wall **57** of the capsule has a downwardly facing annular tapered seat **67** which surrounds the membrane **58** and which is forced into fluid-tight sealing engagement with a cooperating upwardly facing annular tapered surface **68** of the jet means **64** which surrounds the top discharge nozzle (FIG. 4). Further downward movement depresses the discharge valve **59** of the container **71**, thereby releasing primary fluid for entraining high velocity flow through the lower small-bore delivery conduit **38** to the upper large-bore dwell conduit **37** where turbulent mixing takes place prior to discharge through the spout **54**. The top discharge nozzle **64** of the adapter means is provided with a bore of fine size, as previously discussed, to produce the required high velocity jet stream.

While the invention has been described with reference to certain embodiments, they are to be considered illustrative rather than limiting, and it is intended to cover all further embodiments that fall within the spirit and scope of the appended claims.

I claim:

1. A mixing head for use with a pressurized primary fluid container having a discharge valve of the type which is normally biased to a closed condition, said mixing head comprising a housing defining a secondary fluid chamber adapted to contain said second fluid when it is connected to said primary fluid container and having a main body portion and a cap, a collar having a bottom peripheral clamping edge for connection to the rim of a pressurized primary fluid container, said housing being operatively mounted in said collar for vertical movement therein, said main body portion having a bottom wall with a socket therein for snugly receiving the discharge valve stem and actuating said discharge valve, said cap having an opening and a spout extending outwardly therefrom, a mixing means connected to and depending from said cap including an upper large-bore dwell conduit and a lower small-bore delivery conduit, said delivery conduit terminating above and in vertical alignment with said socket.

2. A mixing head as defined in claim **1** and wherein said socket in the bottom wall and said opening in said cap are vertically centrally aligned in said housing and said mixing chamber is vertically centrally aligned therebetween providing a central and substantially straight flow path from said socket to said spout.

3. A mixing head as defined in claim **2** and wherein said cap includes a bottom annular ring surrounding said opening, said annular ring having a downwardly facing surface in the form of a truncated cone for directing combined primary and secondary fluids from said dwell conduit through said opening to said spout.

4. A mixing head as defined in claim **3** and wherein said housing, collar and mixing means are in the form of vertical cylinders, said housing having a height about equal to its diameter, said dwell conduit having a height about one third the height of said housing and a diameter about one half the diameter of said housing, said delivery conduit having a height about the height of said dwell conduit and a diameter about one third the diameter of said dwell conduit.

5. A mixing head as defined in claim 4 and wherein said delivery conduit terminates ¼ inch above said socket.

6. A mixing head for use with a pressurized primary fluid container having a discharge valve of the type which is normally biased to a closed condition, said mixing head comprising a housing defining a secondary fluid chamber adapted to contain said secondary fluid when it is connected to the stem of said discharge valve of said primary fluid container and having a bottom wall and a top spout for discharging a mixture of primary and secondary fluids, guide means for enabling guided reciprocating movement of said housing with respect to said container, jet means for producing a jet stream of primary fluid through said bottom wall when said discharge valve is open, mixing means having an upper large-bore dwell conduit in fluid communication with said spout and a lower small-bore delivery conduit, said delivery conduit terminating above said bottom wall and said jet means and in vertical alignment with the jet stream produced by said jet means.

7. A mixing head as defined in claim 6 and wherein said top spout has a closed severable terminal end and said bottom wall has a puncturable membrane thereby defining a fluid tight secondary fluid sealed capsule until used.

8. A mixing head as defined in claim 7 and wherein said jet means includes an adapter having a bottom inlet socket for snugly receiving said discharge valve and a top discharge nozzle having a bore of fine size to produce a high velocity jet stream.

9. A mixing head as defined in claim 8 and wherein said guide means includes a collar having a bottom peripheral clamping edge for rigid connection to the rim of said container, a flexible means interconnecting said adapter and said collar to enable vertical valve opening and closing movement of said adapter, said puncturable membrane being puncturable by said top discharge nozzle upon downward valve opening movement of said housing, said bottom wall having a downwardly facing annular tapered seat surrounding said membrane, said jet means having an upwardly facing annular tapered surface which sealably coacts with said seat.

10. A mixing head as defined in claim 9 and wherein said puncturable membrane has radiating score lines from its center to facilitate the opening thereof.

References Cited

UNITED STATES PATENTS

2,971,793	2/1961	Peterson et al.	239—303 X
3,080,094	3/1963	Modderno	222—80
3,135,428	6/1964	Gallo	222—136 X
3,181,737	5/1965	Chaucer	222—399 X
3,182,860	5/1965	Gallo	222—136
3,217,938	11/1965	Ayres	239—135 X
3,235,126	2/1966	Shay	222—193 X
3,240,396	3/1966	Friedenberg	222—394 X
3,291,346	12/1966	Marraffino	222—136
3,297,209	1/1967	Pungitore	222—136 X

FOREIGN PATENTS

622,420	1/1961	Canada.

RAPHAEL M. LUPO, *Primary Examiner.*