July 7, 1953 J. S. PALMER 2,644,605

BREAKER STRIP CONSTRUCTION

Filed Feb. 28, 1950

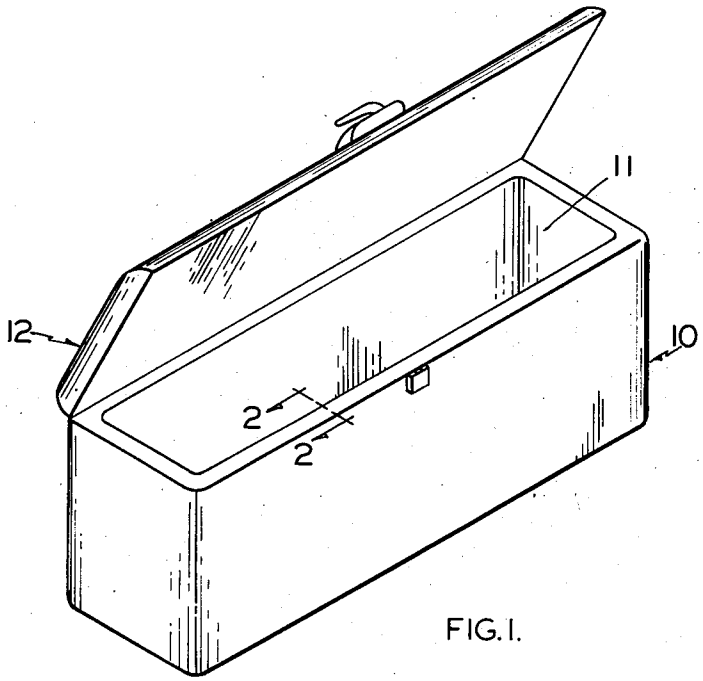

FIG. 1.

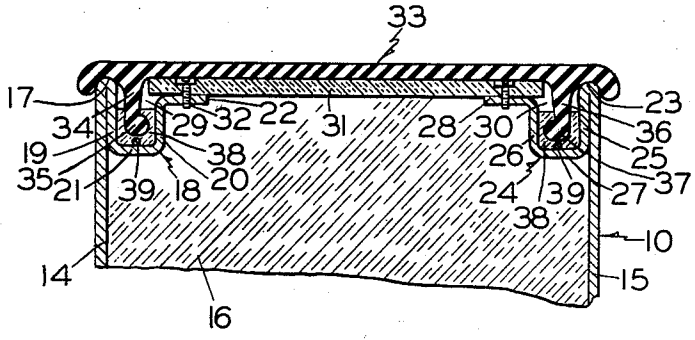

FIG. 2.

INVENTOR
JOHN S. PALMER
Paul O. Pippel
ATT'Y

Patented July 7, 1953

2,644,605

UNITED STATES PATENT OFFICE

2,644,605

BREAKER STRIP CONSTRUCTION

John S. Palmer, Evansville, Ind., assignor to International Harvester Company, a corporation of New Jersey

Application February 28, 1950, Serial No. 146,652

4 Claims. (Cl. 220—15)

1

This invention relates to refrigerator cabinet constructions having spaced apart walls and particularly to a breaker strip construction for bridging the space between the outer wall and inner wall at the door opening side of such cabinet.

It is the primary purpose of the present invention to provide a breaker strip assembly in which a sealing material seals the space between the walls of a refrigerator cabinet and also secures the breaker strip to said walls.

Another object is to provide a breaker strip construction which is rugged, inexpensive and easily assembled.

Still another object is to provide a breaker strip construction which holds the walls of a refrigerator cabinet in spaced apart relationship and blends in smoothly with the lines of said cabinet.

A further object is to provide a breaker strip construction which is a good heat break member between the walls of a refrigerator cabinet and does not sacrifice insulating space between said walls.

Other objects and advantages of the invention will be apparent from the following description of a specific embodiment taken in connection with the accompanying drawing in which:

Fig. 1 is a top view of a top opening type of refrigeration cabinet or chest having the food storage compartment door in open position.

Fig. 2 is an enlarged sectional view taken on the line 2—2 of Fig. 1.

In the drawing, numeral 10 designates a refrigerator cabinet having a food storage compartment 11 and a door 12 hingedly supported on the cabinet wall. The illustrated wall of the cabinet includes an outer wall 14 and an inner wall 15 with insulating material 16 therebetween. The outer wall 14 has a portion bent downwardly and inwardly at edge 17 to form an upwardly opening channel shaped bracket 18 having legs 19 and 20, bottom 21 and a flat portion 22 extending from leg 20 at right angles to wall 14 and spaced below edge 17. The inner wall 15 has a portion bent downwardly and outwardly at edge 23 to form an upwardly opening channel shaped bracket 24 having legs 25 and 26, bottom 27 and a flat portion 28 extending from leg 26 at right angles to inner wall 15 and spaced below edge 23. The channel shaped brackets 18 and 24 extend the complete length of the inner and outer walls, thus forming grooves or pockets 29 and 30 completely around the periphery of the door opening which are filled with sealing material as hereinafter described. If desired, brackets 18 and 24 could be fabricated as separate parts and then attached to the inner and outer cabinet walls.

2

A supporting strip 31 of rigid material having good insulating qualities and substantial mechanical strength, such as compressed fiber board, is secured to the flat portions 22 and 28 by sheet metal screws 32. The top surface of supporting member 31 is located in substantially the same horizontal plane as edges 17 and 23. This supporting member serves to hold the inner and outer wall members in spaced apart relationship and to provide a support for a breaker strip member as hereinafter described.

A resilient breaker strip 33 of moisture proof, rubber-like material overlaps the edges 17 and 23 and fits down against supporting member 31. If desired, a cementing material may be used to secure the breaker strip 33 to supporting member 31. The breaker strip is formed with longitudinal rib-like projections 34 and 36 on its under side spaced inwardly from the breaker strip edges. These projections extend a substantial distance below said breaker strip and terminate into nubs or enlarged portions 35 and 37. The grooves 29 and 30 are filled with a sealing material 38 of a bituminous nature or a material havng similar properties into which the projections 34 and 36 are imbedded. The sealing material 38 seals the insulating space between the walls 14 and 15 to prevent entrance of any air or moisture and also secures the breaker strip in position.

In assembling said breaker strip, supporting member 31 is first secured to flat portions 22 and 28 by sheet metal screws 32. The bituminous sealing material 38 is then poured into grooves 29 and 30 while hot and in the liquid state. The breaker strip 33 is then fitted over supporting member 31 and the projections 34 and 36 are forced down into grooves 29 and 30 and imbedded in the sealing material. As the sealing material cools to room temperatures, it solidifies and thus holds the projections securely in place. If desired, heater wires 39 may be disposed in grooves 29 and 30 with provisions for passing an electrical current through said wire. This current will produce heat in the heater wire which will, in turn, heat the sealing material, thus maintaining the sealing material in a liquid state during the assembly or disassembly of said breaker strip.

From the above description it will be ap-

preciated that the invention provides a novel breaker strip construction which is inexpensive and easily installed, acts as a good heat break member and sacrifices little of the insulation space between the cabinet walls.

While one embodiment of the invention has been described for purposes of illustration, it should be understood that various modifications may be made without departing from the spirit of the invention or the scope of the appended claims.

What is claimed is:

1. In a refrigerator cabinet having spaced inner and outer walls provided with adjacent edge portions, channel-shaped brackets positioned adjacent said edge portions, a support member connecting said brackets, a breaker strip bridging between said walls, said breaker strip having longitudinal ribs formed on one side, said ribs spaced inwardly from the breaker strip edges, said ribs being relatively thin and terminating into nubs, said ribs extending into said brackets, and a sealing material disposed in said brackets, said nubs embedded in said sealing material.

2. In a refrigerator cabinet having spaced inner and outer walls provided with adjacent edge portions, a breaker strip bridging between said walls, said edge portions bent inwardly toward each other into U-shaped channels having flat portions extending toward each other, a support member connecting said channels and secured to said flat portions, said breaker strip having longitudinal projections along each edge thereof, said projections extending into said channels, and a sealing material disposed in said channels and surrounding said projections, said sealing material securing said breaker strip in place and sealing the space between said walls.

3. In a refrigeration cabinet construction, inner and outer walls having heat insulation therebetween and being provided with a door opening, said walls having edge portions spaced apart peripherally of the door opening, bracket means positioned adjacent to said edge portions, said bracket means forming grooves around the periphery of said door opening, a support member secured to said brackets and extending therebetween, a breaker strip positioned between said walls and overlapping said edge portions, said breaker strip and said supporting member disposed in adjacent parallel planes, said breaker strip having longitudinal projections spaced inwardly from each edge thereof, said projections extending down into said grooves, and means for sealing the space between said walls and for securing the breaker strip in place, said means including a sealing material disposed in said grooves into which said projections are embedded.

4. In a refrigerator cabinet construction, inner and outer walls having heat insulation therebetween and being provided with a door opening, said walls having edge portions spaced apart peripherally of the door opening, the outer wall edge portion bent inwardly into a U-shaped channel with a flat portion extending toward the inner wall and perpendicular to the outer wall, said inner wall edge portion bent outwardly into a U-shaped channel with a flat portion extending toward the outer wall and perpendicular to the inner wall, a supporting member secured to said flat portion and connecting said channels, a breaker strip positioned between said walls and overlapping the edge portions, said breaker strip and said supporting member disposed in adjacent parallel planes, said breaker strip having longitudinal projections spaced inwardly from each edge thereof, said projections extending into said channels, and means for securing said projections in said channels and for sealing the space between said walls, said means comprising a sealing material which substantially fills the channels and surrounds said projections.

JOHN S. PALMER.

References Cited in the file of this patent

UNITED STATES PATENTS

Number	Name	Date
1,369,919	Eliel	Mar. 1, 1921
1,404,113	Gonnella	Jan. 17, 1922
2,119,438	O'Leary	May 31, 1938
2,123,403	Connelly	July 12, 1938
2,147,886	Devine	Feb. 21, 1939
2,162,271	Munters	June 13, 1939
2,179,542	Claxton et al.	Nov. 14, 1939
2,243,506	Mitchell	May 27, 1941
2,273,976	Mitchell	Feb. 24, 1942
2,464,526	Palmer	Mar. 15, 1949
2,480,257	Palmer et al.	Aug. 30, 1949

FOREIGN PATENTS

Number	Country	Date
537,438	Germany	Nov. 3, 1931