United States Patent

Wheeler

[15] **3,652,854**

[45] **Mar. 28, 1972**

[54] CARD-FORMAT PERSONNEL DOSIMETER

[72] Inventor: **Robert V. Wheeler,** Lemont, Ill.

[73] Assignee: **Technical Operations, Incorporated,** Burlington, Mass.

[22] Filed: **Dec. 9, 1970**

[21] Appl. No.: **96,664**

[52] **U.S. Cl.** .....**250/71 R**

[51] **Int. Cl.** **G01t 1/11**

[58] **Field of Search** .....250/71 R, 83, 83 CD, 83 PH

[56] **References Cited**

UNITED STATES PATENTS

3,243,590 3/1966 Forsman et al. .....250/71 R X

3,417,497 12/1968 Hannon 40/2.2

Primary Examiner—Archie R. Borchelt

Assistant Examiner—Davis L. Willis

Attorney—Alfred H. Rosen and John H. Coult

[57] **ABSTRACT**

A dosimeter in the form of a laminate card is depicted. More specifically, a dosimeter card is shown which comprises a stiff but flexible backing plate having apertures for holding one or more materials sensitive to high energy radiation. Adhesive-backed stickers carrying identification and/or instructional information are adhered back-to-back on the plate, securing the radiation sensitive materials in their respective apertures. The plate and stickers are encapsulated between heat-bonded polyester and Mylar sheets.

10 Claims, 2 Drawing Figures

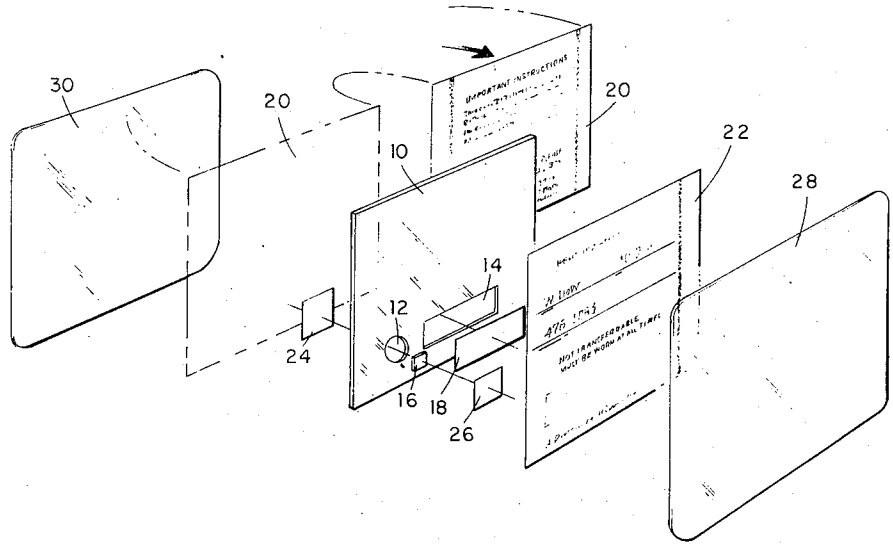

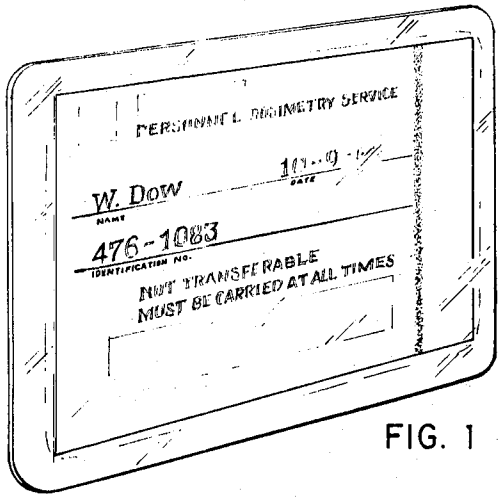

FIG. 1

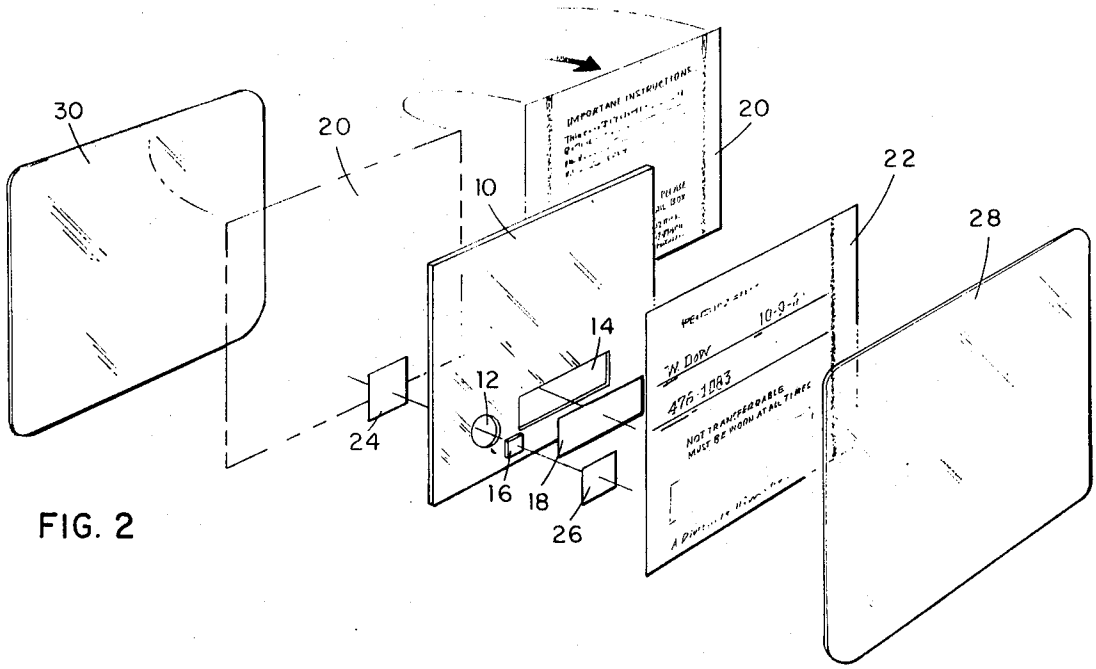

FIG. 2

ROBERT V. WHEELER
INVENTOR

BY: ALFRED H. ROSEN
and
JOHN H. COULT
ATTORNEYS

CARD-FORMAT PERSONNEL DOSIMETER

This is a continuation of Ser. No. 767,791 filed Oct. 15, 1968, now abandoned.

BACKGROUND OF THE INVENTION

The monitoring of radiation doses received by personnel working near sources of high energy radiation is conventionally carried out with film badges worn by the susceptible personnel. Each film badge contains a strip of radiation-sensitive film which is periodically returned to a service organization which develops the film and issues reports on received dosages. Film badges of this type serve a very worthwhile purpose when used by personnel associated with high energy radiation on a day-to-day basis, however, they are not entirely satisfactory for use by personnel whose contact with high energy radiation is sporadic, since the badges have a relatively short useful life. Also, because of the limited dynamic range of the photosensitive materials used, the film badges are also unsatisfactory where very large doses of the radiation are encountered.

Interest has been shown recently in thermoluminescent dosimeters (TLD's) which have a much longer useful life and which are capable of detecting much higher levels of radiation before saturating. Prior art TLD's have been susceptible, however, to many of the drawbacks existing in film badge-type dosimeters. These TLD's have been in some cases susceptible to shock, abrasion, or chemical degradation; in all cases they have been used in the manner of the film badges, being designed to be worn on the person only during working hours after which they are stored on a common rack. It is manifest that prior art dosimetric structures and techniques do not yield a completely accurate record of radiation dosages received by the badge wearer, but rather represent the cumulative dosage taken by the wearer during working hours and by the storage rack during non-working hours. Further, it has been found that with present badges and dosimetric techniques, due largely to the fact that present badges are not intended to be worn on the person at all times, when large doses of radiation are received unexpectedly, the exposed individuals often are not wearing their badges.

OBJECTS OF THE INVENTION

It is an object of this invention to introduce an entirely new concept in personnel dosimetry. This concept involves the use of a dosimeter, especially a thermoluminescent dosimeter, in the form of a card adapted, for example, for storage in a wallet. The dosimeter is carried on the person at all times, thus precluding the possibility that an unexpected exposure to a substantial quantity of high energy radiation will find the involved individual without some means of detecting the amount of radiation received.

It is another object of this invention to provide a disposable, low-cost, one-use personnel dosimeter.

It is a further object to provide a dosimeter which is extremely resistant to wear, abrasion, impact, and chemical attack.

It is yet another object to provide a TLD in the form of a card which is interchangeable with film packets in conventional film badge dosimeters.

Further objects and advantages of the invention will in part be obvious and will in part become apparent as the following description proceeds. The features of novelty which characterize the invention will be pointed out with particularity in the claims annexed to and forming a part of this specification.

BRIEF DESCRIPTION OF THE DRAWINGS

For a fuller understanding of the invention, reference may be had to the following detailed description taken in connection with the accompanying drawings wherein:

FIG. 1 is a perspective view of a laminate TLD card embodying the principles of the invention; and

FIG. 2 is an exploded view of the card shown in FIG. 1 with an instruction-bearing sticker constituting one lamina of the card being shown with a hidden surface revolved into view.

DESCRIPTION OF THE PREFERRED EMBODIMENTS

A preferred embodiment of the inventive concepts is shown in FIGS. 1 and 2. The illustrated embodiment comprises a laminate card adapted especially for storage in the wallet of the individual whose radiation exposure is to be monitored. The card comprises a backing plate **10** (of linear-polyethlene, for example) which gives shape and skeletal support to the card. The plate **10** may have one or more apertures, for example, as shown at **12** and **14**, adapted to respectively hold a radiation-sensitive material. In the illustrated embodiment, a chip **16** of lithium fluoride and a strip **18** of indium foil are shown supported in the apertures **12** and **14**, respectively typifying two of the many radiation-sensitive materials which are available. Lithium fluoride, or alternatively such materials as synthetic $CaF_2(Mn)$, natural based calcium fluorides, $Li_2B_4O_1$ (Mn), and others may be used to detect ionizing radiation. Indium, or alternatively, silver, gold, or other neutron-activated materials may be used to detect the presence of neutrons.

Indicia means in the form of a pair of adhesive-backed stickers **20, 22** serve to carry identification and/or instructional information and further function to trap the radiation-sensitive materials in their respective apertures in the plate **10**. Non-adhesive patches **24, 26** may be provided in registration with the lithium fluoride chip **16** to prevent adhesion of the chip to either of the stickers **20, 22**.

The plate **10** and adhered stickers **20, 22** are encapsulated between a polyester sheet **28** and a Mylar sheet **30** which are heat-bonded along the marginal areas thereof to provide a hermetic wear-resistant seal for the radiation-sensitive materials and the identification materials.

The invention is not limited to the particular details of construction of the embodiment depicted, and other modifications and applications are contemplated. For example, means other than a plate as shown at **10** might be provided for giving shape and support to the card. A great many approaches might be taken to securing the radiation-sensitive materials on the card; the method shown is preferred since it causes the materials to be supported coplanarly with the backing plate to provide a thin overall construction.

Alternative means for exhibiting identification and/or instructional information might be employed, for example, the information might be impressed directly into the backing means. Rather than adapting the card for use in a wallet, the format may be changed to be compatible with conventional film badges for substitution for conventional film packets.

Therefore, because certain changes may be made in the above-described article without departing from the true spirit and scope of the invention herein involved, it is intended that the subject matter of the above depiction shall be interpreted as illustrative and not in a limiting sense.

What is claimed is:

1. A personnel dosimeter in the form of a wallet card, comprising:

at least one thermoluminescent material;

stiff, flexible synthetic resin plate means for supporting said thermoluminescent material and for giving skeletal shape and support to the card;

indicia-bearing means for exhibiting user information; and

a pair of synthetic resin sheets heat-bonded around said plate means for encapsulating said indicia-bearing means and said thermoluminescent material.

2. The dosimeter defined by claim **1** wherein said indicia-bearing means comprises at least one adhesive-backed sticker serving to at least partially support said thermoluminescent material on said plate means.

3. The dosimeter defined by claim **2** wherein said plate means comprises a single plate having an aperture for receiving said thermoluminescent material, and wherein said indicia-bearing means includes a pair of adhesive-backed stickers adhered back-to-back on said plate to support said thermoluminescent material in said aperture.

4. The dosimeter defined by claim **3** wherein said thermoluminescent material is lithium fluoride.

5. A personnel dosimeter in the form of a wallet card, comprising:

a relatively thin element of thermoluminescent material;

a stiff, flexible synthetic resin plate of substantially uniform thickness for giving skeletal shape and support to the card, said plate having an area at least as large as said element in which a portion of said thickness at least as great as the thickness of said element has been omitted to receive said element;

retaining means for retaining said element in said area of said plate; and

synthetic resin sheet means heat-bonded around said plate for encapsulating and protecting said plate, said retaining means, and said element of thermoluminescent material.

6. The dosimeter defined by claim 5 wherein said retaining means comprises at least one adhesive-backed sticker adhered to said plate means over said area and serving to hold said element on said plate means.

7. The apparatus defined by claim 5 wherein said retaining means carries indicia exhibiting user information.

8. A thermoluminescent personnel dosimeter in the form of a wallet card, comprising:

a plurality of radiation-sensitive materials including at least one thermoluminescent material;

planar backing means comprising a stiff, flexible synthetic resin plate for supporting said radiation-sensitive materials and for giving skeletal shape and support to the card, said plate including a plurality of apertures for holding said radiation-sensitive materials; and

indicia means for exhibiting user information comprising a pair of adhesive-backed stickers adhered back-to-back on said plate to support a radiation-sensitive material in each of said apertures.

9. The dosimeter defined by claim 8 including a pair of synthetic resin sheets heat-bonded around said plate and said stickers to provide a protective seal therefore.

10. The dosimeter defined by claim 9 wherein said radiation-sensitive materials include indium foil and lithium fluoride.

* * * * *