May 13, 1947. M. M. HALL 2,420,594

CABLE ANCHOR FOR WINCHES

Filed Nov. 15, 1945

Fig. 1.

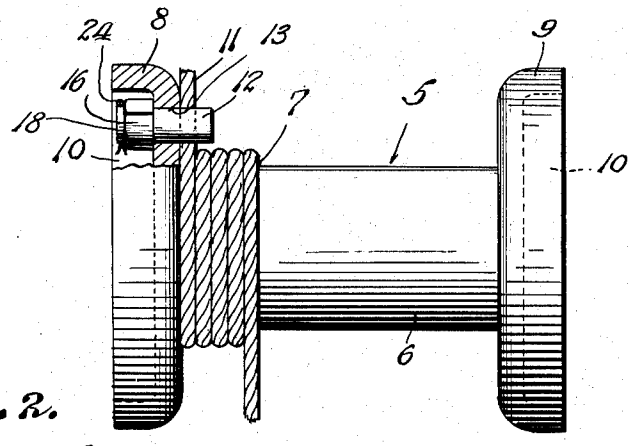

Fig. 2.

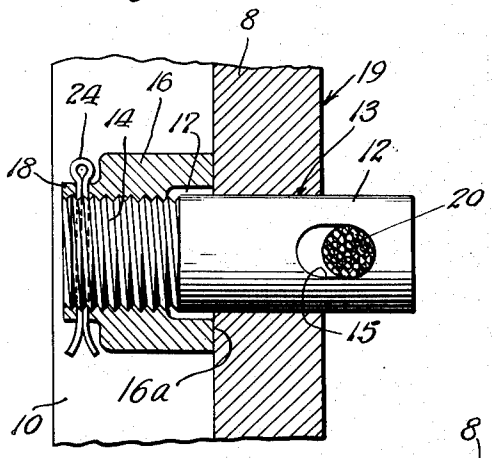

Fig. 3.

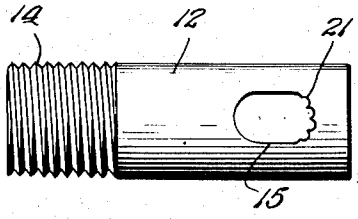

Fig. 4.

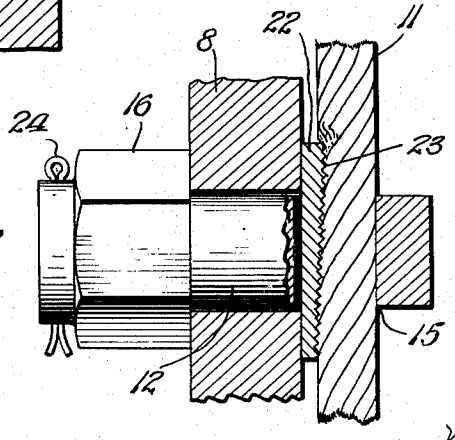

INVENTOR.

BY Mark M. Hall

Mason, Porter & Diller

ATTORNEYS.

Patented May 13, 1947 2,420,594

UNITED STATES PATENT OFFICE

2,420,594

CABLE ANCHOR FOR WINCHES

Mark Manley Hall, Prescott, Ariz., assignor of one-third to Delmar F. Reeves, Phoenix, Ariz.

Application November 15, 1945, Serial No. 628,852

2 Claims. (Cl. 242—117)

1

The present invention relates broadly to winches and more particularly to improved means for anchoring one end of a cable to the winch.

It has heretofore been the practice when fastening one end of a cable to the winch to provide a series of holes in the flange of the winch through which the cable is woven or threaded back and forth. This threading or weaving causes kinks in the cable resulting in frequent breakage under strain or overload.

It is an important object of the invention, therefore, to provide means for anchoring one end of the cable to the winch in a manner to obviate kinking thereof with the resultant breakage when the cable is placed under strain.

Another object of the invention is to provide cable clamping means in the form of a pin receivable in one flange of the winch, said pin being formed with an elongated opening adjacent one end thereof for receiving the end of the cable, and a nut on the other end of the pin whereby when the pin is drawn up by the nut the cable will be securely clamped between the inner end of the opening and the inner face of the flange.

A further object of the invention is to provide a cable anchoring member for winches wherein the elongated slot or opening is serrated or burred to aid in providing a firmer grip on the cable as the cable is drawn tightly against the inner face of the winch flange.

A still further object of the invention is to provide a cable anchoring member of the above character wherein the nut which is threadedly secured on the outer end of the pin is counterbored so that the end of said pin will not protrude beyond the outer face of the nut when tightened thereby.

The above and other objects of the invention will in part be obvious and will be hereinafter more fully pointed out.

In the drawings:

Figure 1 is an elevational view, partly in section, of a standard type winch with the cable anchoring member attached to the flange thereof.

Figure 2 is an enlarged sectional view of the cable anchoring member, with the parts in the position assumed when anchoring the cable to the winch.

Figure 3 is an elevational view in modified form of pin.

Figure 4 is a partial sectional view of a modified form of the invention in which a knurled wedge is used in conjunction with the pin and nut.

Referring to the drawing for a more detailed description thereof, a winch of standard construction is generally designated by the reference numeral 5 and is shown to include a cylindrical shaped drum 6 on which the cable 7 is wound. The winch 5 further includes flanges 8 and 9 suitably secured to each end of the drum 6, said flanges being of greater diameter than the drum 6. Each flange is counterbored as indicated at 10, and as is to be understood, the counterbored flanges 8 and 9 and drum 6 are of standard and well-known construction and, therefore, form no part of the present invention.

2

The anchoring of one end 11 of the cable 7 has heretofore presented a problem. One practice widely followed in anchoring the cable end is to provide a series, for example, three or more, of openings in one of the flanges 8 or 9 through which the cable end is threaded or woven. This threading or weaving of the cable end served to lock the cable end but has not proven satisfactory in that kinks were formed in the cable resulting in frequent breakage when placed under strain or overload. In accordance with the present invention the end 11 of the cable is securely anchored to the winch without liability of the cable kinking and breaking. This improved cable anchoring means includes a cylindrical pin 12 of substantially uniform diameter which slidably fits an opening 13 formed in the flange 8 adjacent the outer periphery thereof. The pin projects from the inner and outer faces of the flange. The outer end of the pin is threaded as indicated at 14 while the inner end is formed with an elongated opening 15. The pin is of considerable greater diameter than the cable to be clamped and the opening has a width which permits the free insertion of the end of the cable therein. The threaded end 14 carries a nut 16, which nut is counterbored as indicated at 17. The pin 12 and nut 16 are designed so that the end of the pin 12 will not protrude beyond the outer face 18 of the nut 16. This is accomplished by limiting the number of threads 14 on the pin and forming the counterbore 17 in the nut 16. The counterbore at the inner end of the nut 16 provides an annular abutment face 16a which abuts against the outer face of the flange 8. This permits of the threaded portion of the pin being disposed on the outside of the flange and provides for a firm but slidable mounting of the pin in the opening in the flange.

In the use of the device for anchoring the cable, the pin minus the nut 16 will be inserted through the flange opening 13 in such position that the elongated opening 15 will be projected beyond

the inner face 19 of the flange 8. The end 11 of the cable 7 is then inserted upwardly through the opening 15 to substantially the position shown in Figure 1. The nut 16 is then tightened on the threads 14, which action will draw the pin 12 outwardly of the flange 8 until the cable becomes firmly gripped between the inner face 19 of the flange and the wall 20 of the elongated opening 15. As more particularly shown in Figure 2, when the cable is firmly anchored the nut 16 will bear against the outer face of the flange 8 and be completely confined within the counterbore 10 thereof. The nut 16 is confined within the flange 8 to prevent injury to the operator of the winch or the catching of his clothes thereon. Thus, it will be seen that by the new and improved anchoring means, one end of the cable 11 will be firmly clamped so that said cable can be wound on the drum 6 in the normal manner. Through the use of the improved cable anchoring means, kinking or breakage is obviated.

In Figure 3 of the drawing there is shown a modified form of pin in which the elongated opening 15 has one wall thereof formed with serrations 21. These serrations will bite into the cable when the nut is threaded thereon in the manner previously described. In some instances, where the cable is subjected to severe strain and overload, it may be desired to form the opening of the pin with the serrations in order that a firmer bite of the cable can be obtained.

In the modified form of the invention shown in Figure 4, of the drawing, there is employed a tapered wedge 22, one face of which is knurled or serrated as indicated at 23. In this form of the invention the wedge 22 is inserted in the elongated opening 15 simultaneously with the insertion of cable end 11, and upon tightening the nut 16, the smooth face of the wedge will engage the inner face of the flange 8, causing the serrated area 23 to bite into and grip cable end 11.

In all forms of the invention, a cotter key 24 is provided for locking the nut 16 on the pin 12 after the cable has been securely anchored. Of course, use of the cotter key is optional.

It is to be clearly understood that various changes in the details and construction and arrangement of parts may be made without departing from the scope of the invention as set forth in the appended claims.

I claim:

1. A cable end anchoring means for winches having a drum on which the cable is wound and a flange at each end thereof comprising, a cylindrical cable clamping pin of substantially uniform diameter slidably fitting an opening in one of said flanges and projecting from the inner and outer faces of said flange, said pin being of diameter considerably greater than the cable to be clamped and having an opening diametrically therethrough adjacent the inner end adapted to receive the end of the cable, said opening being elongated axially of said pin, the outer projecting end of said pin being threaded and a nut engaging said threaded end and adapted to engage the outer face of the flange for drawing said pin outwardly of the flange whereby to clamp the cable end between the inner face of the flange and the inner end of the opening through said pin.

2. A cable end anchoring means for winches having a drum on which the cable is wound and a flange at each end thereof comprising, a cylindrical cable clamping pin of substantially uniform diameter slidably fitting an opening in one of said flanges and projecting from the inner and outer faces of said flange, said pin being of diameter considerably greater than the cable to be clamped, and having an opening diametrically therethrough adjacent the inner end adapted to receive the end of the cable, said opening being elongated axially of said pin, the outer projecting end of said pin being threaded and a nut engaging said threaded end, said nut having a counterbore in its inner end forming an annular abutment face adapted to engage the outer face of the flange for drawing said pin outwardly of the flange whereby to clamp the cable end between the inner face of the flange and the inner end of the opening through said pin.

MARK MANLEY HALL.

REFERENCES CITED

The following references are of record in the file of this patent:

UNITED STATES PATENTS

Number	Name	Date
1,894,432	Watson	Jan. 17, 1933
2,196,320	Milne	Apr. 9, 1940
1,273,922	Prattinger	July 30, 1918
2,062,882	Heinrich	Dec. 1, 1936
930,162	Dulinsky	Aug. 3, 1909
1,796,409	Schuler	Mar. 17, 1931