MEMORY FRAME MAGNET WIRE TERMINAL

Filed May 9, 1968 2 Sheets-Sheet 1

FIG.1

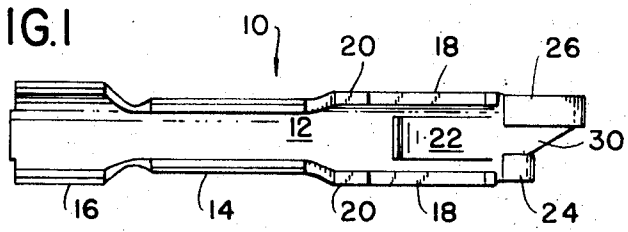

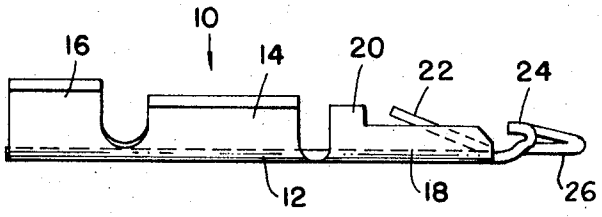

FIG.2

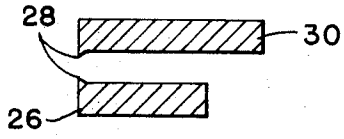

FIG.4

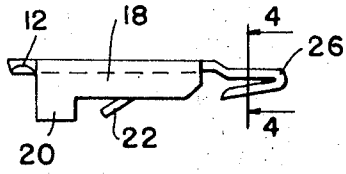

FIG.3

FIG.5

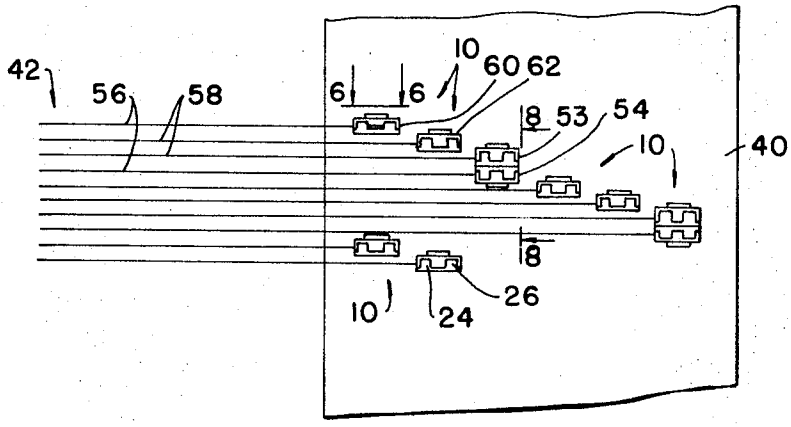

INVENTOR
BILLY E. OLSSON

BY Whittemore, Hulbert + Belknap
ATTORNEYS

MEMORY FRAME MAGNET WIRE TERMINAL

Filed May 9, 1968 2 Sheets-Sheet 2

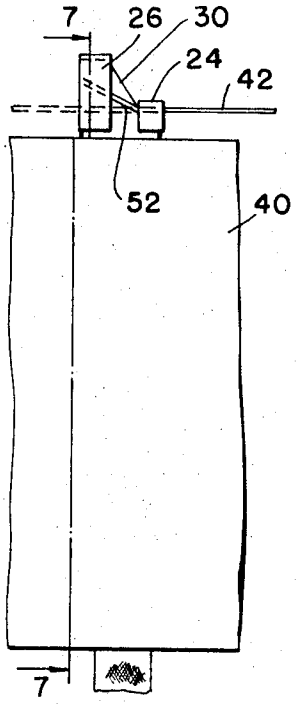

FIG. 6

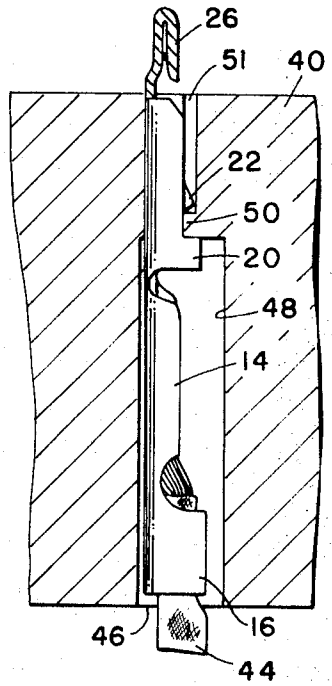

FIG. 7

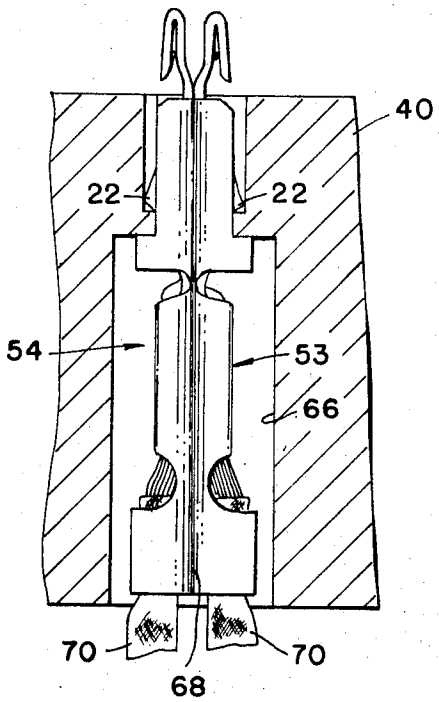

FIG. 8

INVENTOR
BILLY E. OLSSON

BY Whittemore, Hulbert & Belknap
ATTORNEYS

United States Patent Office

3,517,377

Patented June 23, 1970

1

3,517,377

MEMORY FRAME MAGNET WIRE TERMINAL

Billy E. Olsson, New Cumberland, Pa., assignor to Berg Electronics, Inc., New Cumberland, Pa., a corporation of Pennsylvania

Filed May 9, 1968, Ser. No. 727,763
Int. Cl. H01r 7/06
U.S. Cl. 339—273 4 Claims

ABSTRACT OF THE DISCLOSURE

Disclosed is a terminal for accurately locating and establishing an electrical connection with one end of a memory frame magnet wire. The terminal includes a body for forming a latch connection with a memory frame connector block and a wire mounting portion having a wire orienting finger and a wire gripping finger separated by a contact portion. The thin magnet wire is threaded through the fingers, pulled tight against the orienting finger, and then physically secured in this position by the wire gripping finger. The wire may then be soldered or welded to the contact portion between the fingers to establish an electrical connection with the terminal.

Background of the invention

The invention relates to terminals for computer memory frames and particularly to terminals for securing very fine magnet wires to memory frame connector blocks. Computer technology requires reduced size memory frames so that it is necessary to reduce the spacing between adjacent magnet wires on the frame. In conventional memory frames the magnet wire is wrapped around one end of a pin embedded in a block to establish an electrical connection. The pin extends from the other side of the block to enable a suitable connection to be made to a circuit element. Because of the size of the tooling required to establish a wire wrap connection between the magnet wire and the pin, the spacing between pins is limited and it is not practical to obtain the close spacing of magnet wires now required.

It is also conventional to secure magnet wires in memory frames by welding or soldering the wires to flush portions of contacts molded into connector blocks. In connections of this sort it is difficult to provide the minimum wire spacing now required. With this type of contact there is no assurance that the magnet wire is oriented in the proper location on the memory frame grid as the connection between the wire and the metal contact can be made on the flush contact surface with the wire slightly misaligned.

Summary of the invention

The invention relates to a sheet metal formed terminal which is insertable into a cavity in a memory frame connector block and is provided at one end with a portion which extends from one side of the block. The magnet wire is threaded through two fingers on the exposed portion. The first finger accurately orients the magnet wire in the memory frame and the second finger defines a wire engaging recess so that when the wire is moved into the recess it is held in aligned position against the first finger. Further movement of the wire into the recess of the second finger jams the wire against the finger to frictionally hold the wire to the terminal and at the same time sever the wire. The fingers are spaced apart by a contact portion so that after the wire is oriented and physically attached to the terminal, the part of the wire which runs between the fingers may be welded or soldered to the contact portion to establish an electrical connection between the wire and the terminal. The other end of the terminal is provided with conventional wire and insulation grip barrels for establishing an electrical connection with a conductor.

2

By use of a memory frame terminal according to the invention it is possible to rapidly thread the wire through the terminal and with one motion secure the wire to the terminal in the proper position on the memory frame and sever the wire from the terminal. After the wiring of the entire memory frame has been completed, the magnet wires are welded or soldered to the terminals. Thus by use of the invention it is possible to materially reduce the amount of time required to wire a memory frame while at the same time assuring that the wires are accurately located on the memory frame grid. The terminal cavities are molded into the memory frame block so that when the terminals are inserted therein the fingers are accurately aligned to receive and hold the magnet wire. The terminals are positioned on the memory frame connector block to provide the desired close spacing between adjacent magnet wires.

Description of the drawings

FIG. 1 is a top elevational view of a terminal according to the invention;

FIG. 2 is a view of one side of the terminal;

FIG. 3 is a view of a part of the other side of the terminal;

FIG. 4 is an enlarged sectional view taken along line 4—4 of FIG. 3;

FIG. 5 is a top elevational view of part of a memory frame assembly showing a number of terminals mounted in a memory frame connector block with magnet wires attached thereto;

FIG. 6 is an enlarged view taken along line 6—6 of FIG. 5;

FIG. 7 is a sectional view taken along line 7—7 of FIG. 6; and

FIG. 8 is a sectional view taken along line 8—8 of FIG. 5.

Description of the preferred embodiment

As illustrated in FIGS. 1 and 2, the memory frame terminal **10** includes a flat elongate body portion **12** with wire and insulation crimp barrels **14** and **16** formed at one end of the terminal. Flanges **18** are provided at each side of body **12** at the other end thereof and include stops **20** at the inner end of each flange. A spring latch **22** is cut from body **12** between flanges **18** and is bent out from the body so that it extends toward stops **20**. The terminal **10** may be die formed from suitable sheet metal stock, such as brass or bronze.

U-shaped magnet wire orienting finger or hook **24** is located at the end of the terminal adjacent the latch and is formed from a portion of the body **12** which is bent through 180° so that the interior opening of the finger opens toward the terminal. Orienting finger or hook **24** is located to one side of body **12** and a magnet wire securing and severing finger **26** is located at the other side of the body. Finger **26** is also formed from a bent-over portion of the body and shaped to define a narrow interior opening having the configuration of a shallow V as shown in FIG. 3 so that the magnet wire may be jammed into the V and physically secured to the finger. Fingers **24** and **26** are aligned to permit magnet wire to be fed through them in a single operation. As illustrated in FIG. 4, the interior corners of the finger **26** away from the finger **24** are provided with wire severing edges **28** so that as the magnet wire is jammed into the finger, the edges **28** engage and sever the wire. A flat contact portion **30** of body **12** extends between fin-

gers **24** and **26** for establishing an electrical connection with the magnet wire.

As illustrated in FIG. 5, terminals **10** may be mounted close together in tiers along memory frame connector block **40** with a magnet wire **42** attached to each terminal. Prior to mounting the terminals in the block, they are each attached to insulated wires **44** by crimping the wire and insulation barrels **14** and **16** as shown in FIG. 7.

The terminals are mounted in the block **40** by inserting the finger end of the terminals through the openings **46** of cavities **48**. When the terminals are fully seated in the cavities they are positively located in the block with stops **20** engaging one side of block flange **50** and spring latch **22** engaging the other side of the flange **50** to prevent axial movement of the terminal in the cavity. Lateral movement of the terminal in the cavity is prevented by a tight fit between the cavity walls and the upper end of the terminal. The cavity is recessed below flange **50** to prevent binding of the terminal in the block which could reduce the accuracy of location of the terminal. During insertion of the terminal into the cavity, latch **22** is compressed as it rides over flange **50** and snaps back to lock the terminal in the cavity when stops **20** engage the flange. When the terminal is seated in the block, fingers **24** and **26** and contact portion **30** project out of end **51** of cavity **48** and above the top of the block. Finger **24** of each terminal is located adjacent the memory frame (not shown).

The magnet wire **42** is attached to a thin needle and then is threaded through the memory frame and the open interiors of fingers **24** and **26** of one terminal so that when the wire is made taut it extends in a straight line across the memory frame and through both of the terminal fingers. After the wire has been threaded through the fingers, the end thereof adjacent finger **26** is moved upwardly to bring the wire into engagement with finger **24** so that it is located accurately on the memory frame and to wedge the wire into the shallow V of finger **26**. Upward movement of the wire into the V frictionally secures the wire in the V and also brings it into contact with cutting edges **28** so that as the wire is secured in the V it is severed from the remainder of the wire. It is important to appreciate that the upward movement of the wire which results in physically securing the wire in the V defined by finger **26** and in severing it also assures that the wire is held in the recess of finger **24**, thus properly locating the wire on the memory frame.

The fingers **24** and **26** are laterally spaced on the terminal so that portion **52** of the magnet wire **42** is positioned adjacent contact terminal portion **30**. After all of the terminals on the memory frame connector block have been wired, portions **52** of the magnet wire adjacent each terminal contact portion **30** may be readily welded or soldered to the terminal to establish an electrical connection between the magnet wires **42** and wires **44** which are crimped to the terminals.

By spacing the fingers **24** and **26** along the axis of wire **42**, the thickness of the terminal is reduced and the wires **42** can be mounted on the memory frame block at a close spacing. With the terminals **10** mounted in tiered or echelon relation as shown in FIG. 5, the individual magnet wires can be reliably spaced 0.020 inch apart from each other.

Pairs of similar terminals **53, 54** may be used in the memory frame block where it is desirable to interconnect magnet wires **56** and **58**. Wire **56** extends from terminal **60** across the memory frame to the opposite block and is bent around locating pins therein, extends back across the memory frame, and is connected to terminal **54**. Magnet wire **58** extends from terminal **64** across the memory frame and is bent around locating pins and extends back across the memory frame and is attached to terminal **53**.

Terminal pair **53, 54** is shown in further detail in FIG. 8. Terminal **53** is like terminal **10**, and terminal **54** is similar to terminal **10** with the exception that the position of fingers **24** and **26** is reversed. In both terminals **53** and **54** finger **24** is positioned adjacent the memory frame. The terminals are secured to the memory frame **40** in an enlarged single cavity **66** with the flat back surfaces **68** of the terminals in abutment. Terminal latches **22** secure terminals **53** and **54** in the connector block. A suitable connection between the terminals may be provided through wires **70** or by other means to establish a reliable electrical connection between wires **56** and **58**.

What I claim as my invention is:

1. A terminal for establishing an electrical connection with a metal wire comprising a conductive body adapted to be mounted on a support with a portion thereof projecting from the support, contact means for establishing an electrical connection with a circuit element, said portion including a finger having a concave wire-engaging surface facing in a first direction, holding means for physically engaging the wire at a point spaced from said finger a distance in a direction opposite said first direction to hold the wire adjacent said portion, and a flat contact surface adjacent the segment of wire extending between said finger and said holding means for establishing an electrical connection with the wire.

2. A terminal as in claim **1** wherein said holding means comprises a finger defining a V-shaped groove opening in said first direction and adapted to receive and frictionally engage the wire.

3. A terminal as in claim **2** wherein the open end of said V-shaped groove and said concave surface are aligned to facilitate threading of the wire through said finger and said holding means.

4. A terminal as in claim **2** wherein said holding means includes cutting means to aid severing of the wire following frictional engagement therewith.

References Cited

UNITED STATES PATENTS

2,503,559	4/1950	Miloche	339—258
2,833,998	5/1958	Alden	339—191
3,075,167	1/1963	Kinkaid	339—176
3,417,366	12/1968	Holton et al.	339—96

MARVIN A. CHAMPION, Primary Examiner

J. H. McGLYNN, Assistant Examiner

U.S. Cl. X.R.

339—275; 174—94