OPIC
Office de la propriété intellectuelle du Canada

CIPO
Canadian Intellectual Property Office

(12) (19) (CA) **Demande-Application**

(21) (A1) **2,337,143**

(86) 1999/07/14
(87) 2000/01/27

(72) WANDYEZ, GLORIA D., US
(72) GRAY, JOHN D., US
(72) DULETZKE, SCOTT J., US
(72) GALLAGHER, MICHAEL J., US
(72) IANNAZZI, PETER J., US
(72) FARRINGTON, SCOTT D., US
(71) TEXTRON AUTOMOTIVE COMPANY INC., US

(51) Int.Cl.[7] B60R 21/20, B60H 1/24, B60R 13/10, B60R 11/02, B60R 21/04, B60R 7/04, B60R 16/02, B60R 13/02
(30) 1998/07/16 (09/116,163) US
(30) 1998/07/16 (60/093,099) US
(30) 1998/07/16 (09/116,413) US
(30) 1998/07/22 (09/120,510) US
(30) 1998/07/31 (09/127,681) US

(54) **EQUIPEMENT INTERIEUR POUR AUTOMOBILE**
(54) **MOTOR VEHICLE INTERIOR COMPONENTS**

(57) La présente invention concerne un procédé permettant de réaliser une planche de bord d'automobile comprenant une porte de déploiement d'airbag retenue prisonnière en souplesse par moulage d'un premier puis d'un second matériau plastique. L'invention concerne également un ensemble console pour habitacle d'automobile constitué d'un corps de console fait d'une coque extérieure et d'une ouverture d'accès disposée dans la coque, et comportant au moins deux modules de rangement qui sont disposés dans la coque et qui sont supportés séquentiellement mobiles entre, d'une part une ou plusieurs positions cachées décalées par rapport à l'ouverture d'accès, et d'autre part une position apparente voisine de l'ouverture d'accès. L'invention concerne également un ensemble garniture de pavillon incluant un substrat qui est configuré pour se monter sur un véhicule dans une position venant généralement couvrir une face inférieure du pavillon. Des cavités sont réalisées dans la masse du substrat, entre ses faces supérieure et inférieure, de façon à constituer des évidements pour le câblage électrique. L'invention concerne enfin un ensemble de retenu gonflable constitué d'un panneau de garnissage, d'une porte d'airbag disposée de façon à recouvrir une ouverture de déploiement d'airbag dans le panneau de garnissage, d'un joint de soudure frangible par déchirure définissant au moins une partie de la porte d'airbag, et d'un collier en plastique dur fixé au panneau de garnissage, la porte de l'airbag étant réalisée d'un seul tenant avec le collier en plastique dur.

(57) A method of forming a motor vehicle instrument panel with a flexibly tethered air bag deployment door by molding first and second plastics materials is described. Also described is a vehicle passenger compartment console assembly including a console body having an outer shell and an access opening disposed in the console body outer shell, and having at least two storage modules disposed within the shell and sequentially movably supported between one or more concealed positions displaced from the access opening and a displayed position adjacent the access opening. Also described is an automotive headliner assembly which includes a substrate that is configured to mount to a vehicle in a position generally covering a lower surface of a passenger compartment roof. Cavities are integrally formed into the substrate between the upper substrate surface and the lower substrate surface to provide receptacles for electrical wiring, fiber optic cabling, EA foam and the like or to form a duct for directing air flow. Also described is an inflatable restraint assembly comprising a trim panel, an air bag door positioned spanning an air bag deployment opening in the trim panel, a frangible tear seam defining at least a portion of the air bag door, and a hard plastic collar is attached to the trim panel, wherein the air bag door is integrally formed with the hard plastic collar.

PCT WORLD INTELLECTUAL PROPERTY ORGANIZATION
International Bureau

INTERNATIONAL APPLICATION PUBLISHED UNDER THE PATENT COOPERATION TREATY (PCT)

(51) International Patent Classification 7 : B60R 21 /00

A2

(11) International Publication Number: **WO 00/03899**

(43) International Publication Date: 27 January 2000 (27.01.00)

(21) International Application Number: PCT/US99/15831

(22) International Filing Date: 14 July 1999 (14.07.99)

(30) Priority Data:

09/116,163	16 July 1998 (16.07.98)	US
09/116,413	16 July 1998 (16.07.98)	US
60/093,099	16 July 1998 (16.07.98)	US
09/120,510	22 July 1998 (22.07.98)	US
09/127,681	31 July 1998 (31.07.98)	US

(71) Applicant *(for all designated States except US)*: TEXTRON AUTOMOTIVE COMPAGNY INC. [US/US]; 750 Stephenson Highway, Troy, MI 48083 (US).

(72) Inventors; and

(75) Inventors/Applicants *(for US only)*: WANDYEZ, Gloria, D. [US/US]; 983 Rivenoak, Birmingham, MI 48009 (US). GRAY, John, D. [US/US]; Box 279, Union, NH 03887 (US). DULETZKE, Scott, J. [US/US]; 39354 Charbeneau Street, Clinton Township, MI 48036 (US). GALLAGHER, Michael, J. [US/US]; 84 Golfview Drive, Manchester, NH 03102 (US). IANNAZZI, Peter, J. [US/US]; 15 Bloody Brook Road, Hampstead, NH 03841 (US). FARRINGTON, Scott, D. [US/US]; 13 King Pine Way, Kingston, NH 03848 (US).

(74) Agent: SOLOWAY, Norman, P.; Hayes, Soloway, Hennessey, Grossman & Hage, 175 Canal Street, Manchester, NH 03101 (US).

(81) Designated States: AE, AL, AM, AT, AU, AZ, BA, BB, BG, BR, BY, CA, CH, CN, CU, CZ, DE, DK, EE, ES, FI, GB, GD, GE, GH, GM, HR, HU, ID, IL, IN, IS, JP, KE, KG, KP, KR, KZ, LC, LK, LR, LS, LT, LU, LV, MD, MG, MK, MN, MW, MX, NO, NZ, PL, PT, RO, RU, SD, SE, SG, SI, SK, SL, TJ, TM, TR, TT, UA, UG, US, UZ, VN, YU, ZA, ZW, ARIPO patent (GH, GM, KE, LS, MW, SD, SL, SZ, UG, ZW), Eurasian patent (AM, AZ, BY, KG, KZ, MD, RU, TJ, TM), European patent (AT, BE, CH, CY, DE, DK, ES, FI, FR, GB, GR, IE, IT, LU, MC, NL, PT, SE), OAPI patent (BF, BJ, CF, CG, CI, CM, GA, GN, GW, ML, MR, NE, SN, TD, TG).

Published

Without international search report and to be republished upon receipt of that report.

(54) Title: MOTOR VEHICLE INTERIOR COMPONENTS

(57) Abstract

A method of forming a motor vehicle instrument panel with a flexibly tethered air bag deployment door by molding first and second plastics materials is described. Also described is a vehicle passenger compartment console assembly including a console body having an outer shell and an access opening disposed in the console body outer shell, and having at least two storage modules disposed within the shell and sequentially movably supported between one or more concealed positions displaced from the access opening and a displayed position adjacent the access opening. Also described is an automotive headliner assembly which includes a substrate that is configured to mount to a vehicle in a position generally covering a lower surface of a passenger compartment roof. Cavities are integrally formed into the substrate between the upper substrate surface and the lower substrate surface to provide receptacles for electrical wiring, fiber optic cabling, EA foam and the like or to form a duct for directing air flow. Also described is an inflatable restraint assembly comprising a trim panel, an air bag door positioned spanning an air bag deployment opening in the trim panel, a frangible tear seam defining at least a portion of the air bag door, and a hard plastic collar is attached to the trim panel, wherein the air bag door is integrally formed with the hard plastic collar.

MOTOR VEHICLE INTERIOR COMPONENTS

This invention relates to motor vehicle interior components. In one aspect the invention relates to instrument panels having an integral air bag deployment door defined by a tear seam and more particularly to a tether for a potentially frangible air bag door when it is separated at very low temperatures from the instrument panel and then because of cold embrittlement from a flexible hinge that is integral with the door and normally provides through bending movement for opening swinging movement of the door and its retention to the vehicle structure at higher temperatures.

Presently, most passenger side air bag doors are formed in an air bag cover that is separate from the instrument panel because the latter is made of various commercially available thermoplastic materials that are particularly well suited to meeting the requirements of its application but are not well suited to meeting the requirements of an air bag door that is defined by a tear seam formed in a single layer instrument panel. For example, the plastics materials used to make such an instrument panel must have a certain degree of stiffness and high heat resistance to meet the requirements of its application but the materials that are currently available for such an application do not retain ductility and become embrittled at very low or cold temperatures. This lack of low temperature ductility is undesirable for air bag deployment where the air bag is formed integral with and defined by a tear seam that is formed in the instrument panel and is torn to provide an air bag deployment opening in the panel by the force of the inflating air bag acting on the panel in the area of the tear seam. Styrene-maleic anhydride, polypropylene, polycarbonate, polyphenylene oxide and polyurethane are examples of thermoplastic materials that are suitable for such an instrument panel but have not exhibited the required ductility for such a tear-open air bag door at very low temperatures and as a result a portion or portions of the door may fracture and separate from the instrument panel on deployment of

the air bag and undesirably enter the space of the passenger compartment. To meet extreme low temperature requirements, many various designs of an air bag deployment door have been proposed wherein the door is made separate from the panel and is installed as a hinged door assembly on the instrument panel so that the door is not prone to fracture from cold embrittlement by the force of the inflating air bag as it freely swings open on its hinge from the force of the air bag.

Costs can be reduced, quality can be improved and styling can be enhanced by molding the instrument panel and the air bag cover including an integral air bag deployment door in one piece at the same time out of the same commercially available material. That is provided that the normal material requirements for the instrument panel are not sacrificed while the safe assured operability of the integral air bag deployment door is still somehow retained at reasonable cost even though its plastics material is not well suited thereto.

Another aspect of the invention relates to a console for a motor vehicle and, more particularly, to a console having interchangeable storage modules.

It is desirable for motor vehicle consoles to include storage compartments for storing loose items and receptacles for housing accessories such as radios, tape decks, CD players, citizens' band radios, and the like. Including such items and accessories within a floor or instrument panel console allows vehicle occupants to easily see and reach the items and accessories while the vehicle is underway.

Current consoles include fixed storage compartments for loose items and permanent receptacles and mounting systems for various accessories. For example, U.S. Patent No. 5,106,143 issued April 21, 1992 to Soeters discloses an automotive floor console including a main body 20 with storage compartments 27, 28. The storage compartments 27, 28 are fixed within the

console main body 20. The Soeters floor console includes no provision for allowing occupants to interchange storage modules.

U.S. Patent No. 3,926,473 issued December 16, 1975 to Hogan discloses an adjustable center armrest unit with "wings" 7 that adjust laterally outward from a main body portion 1 revealing a fixed, non-removable storage compartment 27. As with the Soeters console, and other consoles in the prior art of record, the Hogan console does not provide for the interchange of storage or accessory modules.

What is needed is a console system that allows occupants to select various interchangeable storage and accessory modules that the occupants can then have access to while the vehicle is under way.

Yet another aspect of the invention relates to an automotive headliner having an integral cavity and a method for making such a headliner.

Inside vehicle roof constructions sometimes include laminated headliners. Such headliner are used in many types of vehicles including passenger cars, vans, buses, trucks, trains and airplanes. Headliners are incorporated into vehicle roof constructions for a variety of reasons including aesthetics, sound absorption, energy absorption, and concealment of electrical wiring harnesses and air vents.

Materials currently used in headliner construction include particleboard, fiberboard, plastic board, scrim, fabric, plastic, various foams and resin-bonded chopped glass fiber. In some headliners, layers of these materials are joined together into a single laminate structure using lay-up-molding techniques. For example, some headliners are constructed using glass reinforced polyester resin laminated to a rigid urethane foam layer and covered by a soft urethane foam backed fabric. Other headliners are thermoformed laminates that include a polystyrene foam layer sandwiched between layers of kraft paper or polymer film material and covered with soft polyurethane foam-backed fabric. Some constructions eliminate the paper or

polymer film covering from such laminates and substitute a non-woven fabric batt adhered to one or both sides of the foam layer. Still other headliners, rather than being layered constructions, are simply molded from a single layer of a composition such as fiberglass reinforced polyester resin.

Headliners are typically contoured to conform to the dimensions of the vehicle roof structure they are intended to cover. Their dimensions are also contoured to flow into adjacent interior vehicle trim panels, pillars and other such structures to present a pleasing, finished aesthetic appearance to vehicle occupants.

In U.S. Patent No. 5,340,425, issued August 23, 1994 to Strapazzini, the inventor proposes that headliners could be constructed to incorporate molded-in inserts of various kinds to include sound proofing material or decorative carpet-like material.

In addition, it is known in the art for headliner assemblies to include one or more electrical wiring harnesses. The harnesses are attached to hidden upper surfaces of such headliner assemblies using fasteners that route the wiring harnesses to a variety of socket for the electrical accessories mounted to the headliners. The headliner assemblies are then mounted to a vehicle roof and an interconnecting wire harness in the vehicle is connected to one or more of the harnesses attached to the headliner assembly.

For example, U.S. Patent No. 5,309,634, issued May 10, 1994 to Van Order et al and assigned to Prince Corporation, discloses a headliner or roof panel that includes a variety of clips and mounts for wiring, lamps and the like. The Van Order et al patent describes the roof panel as being formable from any one or more of a number of molded polymeric materials. The patent also discloses that the molded roof panel can be covered by a foam layer and a decorative outer cover. However, neither the Van Order et al patent nor the Strapazzini patent disclose a headliner or a method for making

a headliner with structures that can direct airflow in or out of a vehicle interior and/or support energy absorbing materials.

British Patent Application No. 1,115,212, published May 29, 1968, discloses an automotive headliner with a lower cushioning layer spaced from an upper roof covering by longitudinal ribs. The cushioning layer, roof covering and ribs define air ducts for supplying air to and removing air from the vehicle interior. According to the British application the ribs may be integrally formed with the cushioning layer but must be assembled to the roof covering in a separate step.

It is also known in the art for headliner assemblies to include a duct that is disposed on an upper surface of the headliners. Outlet registers are mounted in holes formed in the headliner at spaced locations. The duct directs airflow from a vehicle heating, ventilation and air conditioning system into a vehicle passenger compartment through the three air outlet registers. In such systems, the duct is formed separately from the headliner and is fastened to the headliner during manufacturing by such means as gluing.

It is also known to use blow-molded materials to form certain parts of instrument panels. An example of such a use is shown in U.S. Patent No. 5,527,581, issued June 18, 1996 to Sugawara et al and assigned to a Japanese supplier of blow moldable materials. The instrument panel disclosed in the Sugawara et al patent includes a core part having blow-molded sections that are formed from a parison. The parison is fixed in blow mold to form integral cavities in the form of airflow ducts in the instrument panel.

What is needed is a headliner configured to support such items as energy absorbing foam, passenger compartment airflow, and electrical wiring while presenting a continuous, unencumbered aesthetic appearance to vehicle occupants. What is also needed is a cost-effective method for making such a headliner.

In still another aspect the invention relates to motor vehicle instrument panels having an integral air bag deployment door defined by a tear seam and more particularly to a tether for the air bag door when it is separated at very low temperatures from the instrument panel and then from a flexible hinge that is integral with the door and normally provides for opening swinging movement of the door at its retention to the vehicle structure at higher temperatures.

Presently, most passenger-side air bag doors are formed in an air bag cover that is separate from the instrument panel because the latter is made of a commercially available thermoplastic material particularly suited to meeting the requirements of its application but is not well suited to meeting the requirements of an air bag door that is defined by a tear seam formed in the instrument panel. For example, the plastics materials used to make a self-supporting instrument panel must have a certain degree of stiffness and high heat resistance to meet the requirements of its application but the materials that are currently available for such an instrument panel do not retain ductility and become embrittled at very low or cold temperatures which is unsuitable for air bag deployment where the air bag door is formed integral with and defined by a tear seam formed in the instrument panel. Styrene-maleic anhydride, polypropylene, polycarbonate and polyphenylene oxide are examples of thermoplastic materials that are suitable for the instrument panel but do not have the required ductility or flexibility for such an air bag door at very low temperatures. As a result, the air bag cover or door on the passenger side is normally made separate from the instrument panel and of a different commercially available thermoplastic material such as polyurethane elastomer, polyester elastomer, and polyolefin elastomer which are suitable for such application but are not suitable for the requirements of the instrument panel.

Costs can be reduced, quality can be improved and styling can be enhanced by molding the instrument panel and the air bag cover including an integral air bag deployment door in one piece at the same time out of the same commercially available material provided, however, that the normal material requirements for the instrument panel are not sacrificed and the safe assured operability of the integral air bag deployment door is retained at reasonable cost, even though the plastics material may not be well suited thereto.

Finally in yet another aspect the invention relates to inflatable restraint systems for automotive vehicles. More particularly, the invention relates to such systems that include air bag doors that at least partially tear or otherwise separate from a surrounding structure such as an instrument panel retainer.

Current supplemental inflatable restraint systems (SIRs) sometimes include air bag doors that are integrally formed with a portion of a surrounding instrument panel (or instrument panel retainer) as a single unitary panel. Such unitary panels often include weakened areas such as frangible tear seams that define at least a portion of the outline of the air bag door and help to guide tearing and/or breakage under the force of air bag inflating. When a deploying air bag has torn or broken the door open, both the door and the surrounding instrument panel and/or panel retainer must be replaced if the SIR is to be restored to working order.

Such unitary panels are sometimes made of materials that remain ductile at very low temperatures to prevent portions of the panel from fragmenting when inflating air bags hit them. Certain more expensive plastic formulations remain elastic or ductile at temperatures substantially below where less expensive "standard" formulations become brittle or inelastic. In other words, standard formulations may be cheaper and very well suited to general instrument panel requirements, but are not as certain as more expensive formulations at extremely low temperatures. There have been

various attempts to cost-effectively meet with a single material application. However, it has proven to be especially difficult to cost-effectively design an instrument panel with satisfactory air bag deployment characteristics at extremely low temperatures.

What is needed is an air bag door that is integrally formed with a portion of a surrounding automotive instrument panel or instrument panel retainer made of a material that remains ductile at low temperatures but without requirement that the entire instrument panel or panel retainer be constructed of the same material. What is also needed is such an integrally formed door and surrounding panel structure that can more easily be replaced following air bag deployment without requiring replacement of the entire instrument panel or instrument panel retainer.

In one aspect of the present invention, a molded motor vehicle instrument panel made of a thermoplastic material well suited for the primary purpose of such a panel has an integral air bag deployment door for a passenger side air bag that is safely retained to the vehicle structure in a very cost effective manner. The air bag door is defined by a tear seam in the panel and is normally retained by an integral flexible mounting/hinge flange to a part of the vehicle structure when the seam is torn by the inflating air bag and wherein this flange which before was integral with both the door and the panel is then separated from the main body of the panel while remaining integral with the door and bends to allow the door to swing open to allow deployment of the air bag through an opening in the instrument panel while retaining same to the vehicle structure as the door is then free of the instrument panel. At very low temperatures, a portion of the air bag door can break away from the mounting/hinge flange where it joins therewith because of plastic embrittlement at these low temperatures and the high bending stresses encountered at this juncture.

This separation of the broken door portion from the vehicle structure is prevented by bonding a layer of second plastics material over the juncture zone and an adjoining inside surface of the potentially frangible door portion and an adjoining one side of the mounting/hinge flange. The second plastics material has the physical characteristic of remaining ductile to a substantial degree at low temperatures substantially below the temperature at which the first plastics material becomes brittle. The bonded layer thus forms a tether that tethers the frangible door portion to the mounting/hinge flange in a flexible manner when this door portion breaks away from the flange because of embrittlement of the first plastics material at the low temperatures on tearing of the tear seam and opening movement of the door by the inflating air bag pressing against the inside surface of the frangible door portion. This allows the broken door portion to continue movement in its opening direction to allow continued deployment of the air bag while the broken door portion remains connected by the flexible tether to the mounting/hinge flange and thereby the vehicle structure.

The instrument panel and the air bag deployment door tethering layer may be formed in various ways including injection molding the panel and injection molding, spraying or low pressure molding the tethering layer in a second step. Such formation of the tether in place as a bonded layer is particularly advantageous from both a cost and production standpoint as it becomes integral with the instrument panel and there is no need to inventory a separate tether that must then be fastened by some form of fastening means to both the mounting/hinge flange and the door. Furthermore, the bonding of the tethering layer to the inside surface of the door hides its presence from view which is desirable from an appearance or styling standpoint.

The present invention provides a method of forming a motor vehicle instrument panel with a tethered air bag deployment door wherein the panel including the door is formed of a plastics material suited to meet the

requirements of an instrument panel and the tether is formed of a layer of plastics material that spans a potential fracture zone in the door and remains ductile at low temperatures that cause embrittlement of the door that could result in the fracturing of a portion of the door at thus fracture zone on air bag deployment and loss of its retention to the vehicle structure but for the tethering layer.

The invention also provides a method of forming a motor vehicle instrument panel including an air bag deployment door that is defined by a tear seam molded in the panel wherein the panel is formed of a plastics material suited to its requirements and the door is retained to the vehicle structure on breaking away at very cold temperatures by a flexible layer of plastics material that is formed in place over an inside surface of the door and one side of a mounting/hinge flange that is molded integral with the inside surface of the door and normally retains the air bag door to the vehicle structure on opening movement.

Another aspect of the present invention includes an automotive air bag cover assembly comprising a hinge panel that is connected, in a layered disposition, to an inside surface of at least one of the integral air bag cover and instrument panel. The instrument panel comprises a first plastics material and is configured to mount in the passenger compartment of the motor vehicle. The air bag door panel also comprises the first plastics material and is formed with the instrument panel as a single integral panel. The door panel is at least partially surrounded by the instrument panel. One object of this second aspect of the present invention is to simplify and accelerate the manufacture of hinged integral panels by providing a hinge panel that is insert molded into an inside surface of at least one of the instrument panel and the door panel.

In the present invention a hinge panel acts as a primary hinge between the door panel and the instrument panel during air bag deployment. The

hinge panel spans a panel juncture zone between the door panel and the instrument panel.

Another feature of the present invention is to aid in bending the first plastics material at the hinge location by providing a panel juncture zone that includes a styling groove separating at least a portion of the door panel and the instrument panel. The styling groove may also function as a tear seam.

Another feature of the present invention is to guide tearing around the door panel when the air bag inflates by providing a panel juncture zone that includes a weakened tear seam separating at least a portion of the door panel and the instrument panel.

The present invention also provides a hinge that includes a hinge panel edge aligned with at least a portion of the tear seam to act in guiding tearing along the tear seam as the door is forced open during air bag inflation. And the present invention prevents hinge panel fracture at low temperatures by providing a hinge panel comprising metal or a second plastics material that is more ductile and less brittle at low temperatures than the first plastics material.

The present invention also provides a means of securing the door panel to a structural member during deployment by providing a hinge flange that extends transversely inward from the inside surface of the door panel. The hinge flange is configured to secure the door panel to a structural member. The hinge panel spans a juncture zone between the hinge flange and door panel in a layered disposition with a portion of the hinge panel being attached to the hinge flange.

And, the present invention provides a means for supporting an air bag canister assembly on the instrument panel by providing a collar that extends transversely inward from the inside surface of the instrument panel and from around the door panel. The collar defines a door-collar interface along the region where the collar extends from the panel. The hinge panel spans the

door-collar interface, one portion of the hinge panel being attached to the collar and another portion of the hinge panel being attached to the door panel.

Additionally, the present invention provides a method for making an air bag cover assembly. The method includes providing a mold having first and second mold portions. The first and second mold portions form a mold cavity when closed together. The mold cavity has a shape that complements the shape of the integral instrument and door panel and the hinge panel. After being formed separately, the hinge panel is placed in the second mold portion. The mold is then closed and the first plastics material is introduced into the mold cavity in molten form. The molten first plastics material is then allowed to conform to the shape of the mold cavity and to solidify in the mold cavity. The mold is then opened and the completed assembly is removed from the mold.

The method may also include formation of the hinge panel from the second plastics material and the selection of a second plastic material that is more ductile and less brittle at low temperatures than the first plastics material.

The method may alternatively include the provision of a hinge panel comprising metal. In applications where an edge of the hinge panel is aligned with a tear seam to guide tearing along the tear seam, metal is generally preferred over plastic due to increased rigidity which aids in evenly distributing door opening forces along a tear seam to promote more uniform tear seam fracture and subsequent door opening.

The method may also include the placement of the hinge panel on the mold cavity surface of the second mold portion in a position spanning a portion of the mold configured to form the panel juncture zone between the instrument panel and door panel portions of the integral panel. The mold cavity surface of the second mold portion may be shaped to form a hinge-

flange that protrudes transversely inward from the door panel portion of the integral panel. In this case, the hinge panel is placed on the mold cavity surface of the second mold portion in a position spanning a portion of the mold configured to form a flange juncture zone between the hinge-flange and the door panel.

In accordance with another aspect of this invention, a motor vehicle console assembly is provided that includes positioning apparatus configured to support any one of at least two storage modules in a display position while simultaneously supporting at least one of the other storage modules in a concealed position. This allows a passenger compartment occupant to gain physical access to a module and its contents through the access opening while leaving other modules concealed within the shell. The assembly also includes a console body having an outer shell and an access opening disposed in the console body outer shell. A positioning apparatus is movably supported within the console body outer shell. The storage modules are disposed within the shell and are movably supported on the positioning apparatus. The storage modules are sequentially movable between one or more concealed positions displaced from the access opening and a displayed position adjacent the access opening.

According to another aspect of the invention, the positioning apparatus comprises an electro-mechanical occupant-actuated drive mechanism. The drive mechanism relieves occupants of the need to physically move the storage modules between the concealed positions and the displayed position.

According to another aspect of the invention, the positioning apparatus comprises an occupant-actuated automatic module selection system. The automatic selection system allows occupants to move a selected storage module to the displayed position by actuating the automatic system and designating which storage module they wish to have displayed.

According to another aspect of the invention, the modules are sequentially moveable through the displayed position.

According to another aspect of the invention, the positioning apparatus comprises a carrousel supported for rotation about a carrousel axis.

According to another aspect of the invention, the positioning apparatus comprises a drum-type carrousel supported for rotation about a generally horizontal axis. This horizontal axis disposition provides a configuration that better accommodates the storage and selective display of certain vehicle accessories.

According to another aspect of the invention, an access door is movably supported across the module access opening. The door is shaped to cover the access opening in a closed position and movable to an open position uncovering the access opening.

According to another aspect of the invention, at least one of the modules comprises an appliance that is incorporated into the design of the module. This gives occupants selective access to any number of different appliances that are so incorporated.

According to another aspect of the invention, at least one of the modules comprises a storage space. This allows occupants to store loose items in selectively accessible modules of the console assembly.

According to another aspect of the invention the console body is a floor console body supported on a floor of an automobile between a front driver's seat and a front passenger seat of the automobile. Positioning the console assembly in a floor console provides ready access to storage modules for passenger compartment occupants.

According to another aspect of the invention, a forward image display panel is supported in a forward end of the console body. This display panel is supported in a position to provide information to front seat occupants.

According to another aspect of the invention, an aft image display panel is supported in an aft end of the console body and image-producing electronic circuitry connected to the aft display panel. This display panel is supported in a position to provide information to rear seat occupants.

According to another aspect of the invention at least one remote-control unit is included that is communicable with the electronic image-producing circuitry. The remote-control unit allows occupants to control information displayed on the display panel without having to reach forward and manipulate controls on the floor console.

According to another aspect of the invention the console body is an instrument panel console body supported in an instrument panel assembly of the automobile. Locating the assembly in the instrument panel console body provides occupants with easy forward access to items stored or mounted in the assembly.

According to another aspect of the invention, the positioning apparatus comprises a drum-type carrousel supported in the instrument panel console body for rotation about a generally vertical axis.

According to another aspect of the invention, the positioning apparatus comprises a drum-type carrousel supported in the instrument panel console body for rotation about a generally horizontal axis.

According to another aspect of the invention, the carrousel is at least partially housed within a central stack portion of the instrument panel assembly.

According to another aspect of the invention, the carrousel is rotatable to a closed position and in which the carrousel includes a face panel that covers the access opening in the closed position. The face panel deters theft by denying physical access to the contents of the storage modules in the closed position.

According to another aspect of the invention, the positioning apparatus includes a platform having at least two storage regions. The platform is rotatably supported within the console body outer shell. The positioning apparatus is configured to rotate the platform and move a selected one of the storage regions to a display position adjacent the access opening while simultaneously moving the other of the storage regions into a remote position displaced from the access opening. This allows a passenger compartment occupant to gain physical access to an item stored on one storage region of the platform through the access opening while leaving other items stored on the other storage regions in the remote positions within the shell.

In accordance with yet another aspect of this invention an automotive headliner assembly is provided that includes a cavity formed into the substrate between upper and lower substrate surfaces to provide a receptacle for wiring, foam and the like or to provide a duct for directing airflow. The headliner assembly is configured to line the roof of the passenger compartment of a vehicle. The headliner assembly comprises a unitary substrate configured to be mounted to a vehicle in a position generally covering a lower surface of a passenger compartment roof. The lower substrate surface is disposed opposite the upper substrate surface. The substrate comprises a moldable material. A decorative cover may be supported on the lower substrate surface.

According to another aspect of the invention, the cavity comprises an air duct and the headliner includes an air inlet opening positioned to receive air from a vehicle air handling system. An air outlet opening is spaced from the air inlet opening and disposed in an underside surface of the headliner assembly to direct air from the vehicle air handling system into the passenger compartment. The air duct extends between and connects the air inlet opening and the air outlet opening to provide gaseous communication between the air inlet opening and the air outlet opening. Because the air duct

is formed into the headliner substrate, the headliner assembly includes fewer parts and its fabrication is greatly simplified.

According to another aspect of the invention a directional air outlet register is disposed in the air outlet opening.

According to another aspect of the invention the cavity comprises an elongated conduit and the headliner includes a cable inlet opening disposed adjacent a peripheral edge of the headliner assembly to receive electrical or fiber optic cabling from a vehicle electrical or fiber optic system. A cable outlet opening is spaced from the cable inlet opening and is disposed adjacent a fixture supported on the headliner assembly to allow an end of the cable to be connected to the fixture. The cable conduit extends between and provides a channel between the cable inlet opening and the cable outlet opening.

According to another aspect of the invention, foam is disposed within the cavity. The cavity may include an inner wall that envelops the foam. The foam may be energy-absorbing foam to enhance the ability of the cavity to absorb passenger head impact forces. The foam may be an acoustic energy-absorbing foam to reduce noise levels within the passenger compartment.

According to another aspect of the invention additional foam-filled cavities are disposed in an array at spaced locations where passenger head impact is likely to occur if passengers are subjected to sudden vertical acceleration components.

According to another aspect of the invention the cavity is integrally formed in the substrate.

According to another aspect of the invention, a decorative outer cover is disposed on a lower surface of the substrate. A foam layer may be included between the lower surface of the substrate and the decorative outer cover.

According to another aspect of the invention, a method is provided for constructing a headliner. According to the method a blow mold is provided, the blow mold having a contoured portion shaped to complement the desired

exterior contours of the headliner substrate to be formed. The contoured portion includes an enlarged region corresponding to a desired cavity position in the substrate to be formed. A molten parison is then extruded into the hollow portion of the blow mold and the parison is expanded into conforming contact with the contoured portion of the blow mold by injecting gas into the molten parison. The molten parison is then allowed to harden into the headliner substrate and the substrate is removed from the blow mold.

According to another aspect of the inventive method, the molten parison is provided between open halves of a two-piece blow mold. The two blow mold halves are closed together around the molten parison before fully expanding the molten parison.

According to another aspect of the inventive method, a layer of foam is provided on a lower surface of the substrate and a layer of cover material is provided on a lower surface of the foam.

According to another aspect of the inventive method, foam is provided within the cavity.

According to another aspect of the inventive method, foam is provided within the cavity by first inserting one end of an injection nozzle. Foam is then injected into the cavity through the nozzle and the nozzle is withdrawn from the cavity.

According to another aspect of the inventive method, the molten parison is extruded.

According to another aspect of the inventive method, the molten parison is expanded by inserting a blow pin into the molten parison, injecting the gas into the parison through the blow pin and removing the blow pin from the parison.

The present invention also provides a molded instrument panel made of a commercially available thermoplastic material well suited for the primary purpose of such a panel has an integral air bag deployment door for a

passenger side air bag that is safely retained to the vehicle structure in a very cost effective manner. The air bag door is defined by a frangible tear seam in the panel and is normally retained by an integral flexible mounting/hinge flange to a part of the vehicle structure when the seam is torn by the inflating air bag and wherein this flange which before was integral with both the door and the panel is then separated from the panel while remaining integral with the door and bends to allow the door to swing open to alloy deployment of the air bag through an opening in the instrument panel while retaining same to the vehicle structure as the door is then free of the instrument panel. At very low temperatures, a portion of the air bag door can break away from the mounting/hinge flange where it joins therewith because of plastic embrittlement at these low temperatures and the high bending stresses encountered at this juncture. This separation of the broken door portion from the vehicle structure is prevented by provision of a flexible tethering hinge that is formed separately from the panel of a different material and thereafter fastened to the panel so as to span the critical juncture between the flange and the potential break away door portion. The tethering hinge material is of a strong flexible material that remains flexible or ductile to a significant degree at these very cold temperatures.

The flexible tethering hinge is fastened along one margin on one side of the critical juncture zone to a portion of the mounting/hinge flange remote from this potential fracture zone by fastening means such as rivets and is fastened along another margin on the other side of this zone to the inner side of the potential break away door portion by fastening means such as an adhesive or heat staked bosses that cannot be observed at the outer side of the door. The tethering hinge has a portion intermediate its margins that spans the potential fracture zone and flexes when door breakage occurs to permit the broken door portion to continue to swing outward to provide for air bag deployment while retaining the broken door portion to the vehicle structure.

According to another embodiment of the invention, the tethering hinge is formed of a second plastics material that is relatively more flexible than the first plastics material of the panel at temperatures below that which the first plastics material becomes unacceptably brittle and susceptible to breakage. In this embodiment, the tethering hinge is welded to the panel by selective application of energy.

The present inention also provides a new and improved motor vehicle instrument panel with an integral and tethered air bag deployment door and a method of forming such a panel, and a tethered air bag deployment door at low cost and of high quality and to meet certain styling desires.

The invention further provides a motor vehicle instrument panel having an integral air bag deployment door that is defined by a tear seam in the panel and is retained to the vehicle structure by a flexible tethering hinge in the event the door is separated at very low temperatures from an integral mounting/hinge flange that normally fastens the air bag door to the vehicle structure, and the invention provides a motor vehicle instrument panel including an air bag deployment door that is defined by a tear seam in the panel and is retained to the vehicle structure by a flexible tethering hinge formed of flexible sheet material in the event the door is separated at very low temperatures from an integral mounting/hinge flange that normally fastens the air bag door to the vehicle structure.

Additionally, the present invention provides a low cost, high quality, motor vehicle instrument panel including an integral and also flexibly tethered air bag deployment door wherein the door is defined by a tear seam in the panel and is retained to the vehicle structure by a flexible tethering hinge formed of flexible sheet material in the event the door is separated at very low temperatures because of cold embrittlement and bending stresses from an integral mounting/hinge flange that normally retains the air bag door to the vehicle structure.

In yet still another aspect, the invention provides an inflatable restraint assembly comprising a trim panel, a hard plastic collar attached to the trim panel. An air bag door is integrally formed in the hard plastic collar in a position spanning an air bag deployment opening in the trim panel. A frangible tear seam defines at least a portion of the air bag door.

In addition, according to the invention, the air bag door is integrally formed in the hard plastic collar as a single unitary panel.

In addition, according to the invention, the integral air bag door and collar comprise a material tat remains ductile at low temperatures.

To better understand and appreciate the invention, refer to the following detailed description in connection with the accompanying drawings wherein like numerals depict like parts, and wherein:

Figure 1 is a perspective view of a motor vehicle instrument panel including integral air bag deployment door with a flexible tether made according to the present invention and as installed in a motor vehicle over an air bag system;

Figure 2 is an enlarged view taken along the line 2-2 in Figure 1 when looking in the direction of the arrows;

Figure 3 is a view taken along the line 3-3 in Figure 2 when looking in the direction of the arrows;

Figure 4 is a view like Figure 2 but showing the air bag door opened and broken during the deployment of the air bag at a very low temperature;

Figure 5 is a fragmentary perspective view of mold tools used to hold the flexible tethering layer in Figures 2 and 3 and includes a sectional view of the instrument panel as molded and then located between these tools for the molding of the flexible tethering layer;

Figure 6 is a view taken along the line 6-6 in Figure 5 when looking in the direction of the arrows;

Figure 7 is a sectional view of the instrument panel as molded without the flexible tethering layer and includes a diagrammatic view of spraying apparatus for forming the flexible tethering layer;

Figure 8 is a cross-sectional side view of a motor vehicle instrument panel constructed according to the invention and including an integral air bag deployment door in a closed position, a plastic insert molded hinge and an integral mounting/hinge flange;

Figure 9 is a cross-sectional side view of the instrument panel of Figure 8 with the air bag deployment door being moved out of the closed position by an inflating air bag;

Figure 10 is a cross-sectional side view of the instrument panel of Figures 8 and 9 with the air bag deployment door being fractured as it is moved out of the closed position by an inflating air bag;

Figure 11 is a perspective view of a motor vehicle instrument panel including integral air bag deployment door having a plastic insert molded hinge constructed according to the present invention and as installed in a motor vehicle over an air bag system;

Figure 12 is a cross-sectional side view of the instrument panel and air bag system of Figure 11 with the air bag deployment door in a closed position;

Figure 13 is a cross-sectional side view of the instrument panel and air bag system of Figure 11 with the air bag deployment door being moved out of the closed position by air bag inflation;

Figure 14 is a cross-sectional side view of a motor vehicle instrument panel constructed according to the invention and including an integral air bag deployment door and including a metal insert molded hinge;

Figure 15 is a cross-sectional side view of a motor vehicle instrument panel constructed according to the invention and including a collar extending transversely inward from an inside surface of the instrument panel, an

integral air bag deployment door in a closed position and a plastic insert molded hinge;

Figure 16 is a perspective view of a floor console assembly constructed according to a first embodiment of the present invention and installed in a vehicle interior;

Figure 17 is a cut-away perspective view of the floor console assembly of Fig. 16;

Figure 18 is a perspective view of an instrument panel assembly constructed according to a second embodiment of the present invention with a carrousel portion of the assembly in an open position;

Figure 19 is a perspective view of the instrument panel assembly of Fig. 18 with the carrousel portion of the assembly in a closed position;

Figure 20 is a partial cross-sectional view of the instrument panel assembly of Fig. 18 taken along line 20-20 of Fig. 18;

Figure 21 is a partial cross-sectional view of the instrument panel assembly of Fig. 19 taken along line 21-21 of Fig. 19;

Figure 22 is a partially cut-away perspective view of an instrument panel assembly constructed according to a third embodiment of the present invention;

Figure 23 is a perspective view of an instrument panel assembly constructed according to a fourth embodiment of the invention;

Figure 24 is a perspective view of a headliner assembly constructed according to the present invention;

Figure 25 is a top view of the headliner assembly of Fig. 24;

Figure 26 is a cross-sectional side view of the headliner assembly of Fig. 24 taken along line 26-26 in Fig. 25;

Figure 26A is an enlarged view of the region bounded by circle 26A in Fig. 26;

Figure 27 is a cross-sectional side view of a blow-mold with a parison extrusion die injecting a molten parison between halves of the die in accordance with the method of the present invention;

Figure 28 is a cross-sectional side view of the blow mold of Fig. 27 with a blow pin injecting gas into the molten parison in accordance with the method of the present invention;

Figure 29 is a perspective view of a motor vehicle instrument panel including integral air bag deployment door with a flexible tethering hinge according to the present invention and as installed in a motor vehicle over an air bag system;

Figure 30 is an enlarged view taken along the line 30-30 in Figure 29 when looking in the direction of the arrows and includes a diagrammatic view of the air bag system;

Figure 31 is a view taken along the line 31-31 in Figure 30 when looking in the direction of the arrows;

Figure 32 is a view like Figure 31 but of a much smaller cross section area in larger relative scale and illustrates in an exaggerated manner an adhesive used to fasten the flexible tethering hinge to the air bag door instead of the hot staked rivets shown in Figures 30 and 31;

Figure 33 is a view like Figure 30 but showing the air bag door opened and broken but retained during the deployment of the air bag at a very low temperature;

Figure 34 is a schematic sectional view of a motor vehicle instrument panel constructed according to an alternative embodiment of the invention;

Figure 35 is a schematic fragmentary cross-sectional view of the panel and tethering hinge layers held by a clamping fixture in preparation for subsequent welding according to another embodiment of the invention;

Figure 36 is a schematic fragmentary cross-sectional view of the panel and tethering hinge layers of Figure 35 shown joined by a weld;

Figure 37 is a diagrammatic view showing the process steps for forming, joining together and installing the panel and tethering hinge layers to the vehicle structure in position over the air bag system;

Figure 38 is a rear perspective exploded view of an instrument panel including an air bag door integrally formed in a collar and installed in an opening in an instrument panel retainer portion of the instrument panel according to the invention, but omitting a foam layer of the instrument panel for clarity;

Figure 39 is a side cross-sectional view of the instrument panel of Figure 38 including the foam layer; and

Figure 40 is a side cross-sectional view of a retainer and unitary panel portion of an instrument panel constructed according to the invention and having an alternative fastener arrangement.

Referring to Figures 1-4, there is illustrated a molded instrument panel air bag cover assembly 10 for concealing an inflatable air bag system of a motor vehicle. The motor vehicle structure is generally designated as 11. Alternative embodiments of the instrument panel cover assembly 10 are generally shown at 10a in Figures 8-10, 10b in Figures 11-14, and 10c in Figure 15. Reference numerals with the suffix "a" in Figures 8-10, the suffix "b" in Figures 11-14 and the suffix "c" in Figure 15 designate the alternative configuration of each element common to the embodiment of Figures 1-4. Unless the description indicates otherwise, where the description uses a reference numeral to refer to an element in Figures 1-4, I intend that portion of the description to apply equally to elements in Figures 8-10, 11-14 and 15; indicated by the same reference numeral with the suffix "a", "b" or "c"; respectively.

The cover assembly 10 has a contoured section 12 on the driver side for the installation of an instrument cluster (not shown) and an air bag deployment door 14 of rectangular shape on the passenger side that is defined

by a tear seam 16 molded in the cover assembly. The tear seam 16 may be formed by a groove either in the face of the panel as shown or by a similar groove in the back side of the panel to hide the tear seam from view as is well known in the art. The cover assembly covers an air bag system 18 that is located behind the cover assembly directly behind the air bag door 14 and is mounted on a sheet metal portion 20 of the vehicle structure at the front of the passenger compartment. The air bag system 18 is of a conventional type that includes an inflatable air bag 22, a gas generator 24 and a controller 26 that includes a vehicle impact sensor and triggers ignition of the gas generator to inflate the air bag for deployment into the passenger space 28 directly in front of a passenger seated on this side.

The cover assembly 10 is a molded one-piece part of generally uniform wall thickness and is formed of a suitable thermoplastic material such as styrene-maleic anhydride, polypropylene, polycarbonate, polyphenylene oxide and polyurethane that provides sufficient stiffness so that the panel is self-supporting to maintain the desired shape and has sufficient heat resistance to resist deformation due to heat in its interior vehicle environment where it is located immediately behind the windshield (not shown). The cover assembly may be molded in various conventional ways including injection molding as is well known in the art. The groove forming the tear seam 16 is made deep enough in relation to the wall thickness of the cover assembly and the strength of the plastic material used so as to sufficiently weaken the wall section at the tear seam to the point that it is torn by the force of the inflating air bag acting against the back or inside surface of the air bag door and creates on its separation from the cover assembly an opening 30 therein for the deployment of the air bag as illustrated in Figure 4 and described in more detail later.

The cover assembly 10 is fastened to portions of the vehicle structure 11 at various locations outside the area of the air bag door with one such

location being shown in Figure 2 wherein a sheet metal screw 32 fastens the panel at a lower edge thereof beneath the air bag door to a sheet metal portion 34 of the vehicle structure. In addition, it will be understood that similar screws or other conventional type fasteners are used at other locations outside the area of the air bag door to securely fasten the cover assembly in place on the vehicle structure.

The air bag deployment door 14 in the cover assembly 10 is separately fastened to the vehicle structure by an elongated mounting/hinge flange 36 that is molded integral with the back inside surface of the door and extends horizontally along substantially the entire length and adjacent to the upper edge thereof as seen in Figures 1-3. The flange 36 has a flat rectangular portion 38 that extends inwardly of the door a substantial distance and terminates in a flat, rectangular, angled, horizontally extending, distal portion 40 that is fastened along its length by bolts 42 to a sheet metal portion 44 of the vehicle structure. The flange 36 is also formed with a controlled thickness and is capable of elastic bending to a significant degree in the rectangular portion 38 in a certain substantial temperature range and down to a certain low temperature (e.g. -20°F) without breaking and thereby act as a cantilever hinge to normally provide for outward swinging opening movement of the door when the door is separated along the tear seam from the cover assembly for air bag deployment. Prior to such air bag door separation, the flange 36 acts to fasten the cover assembly to the vehicle structure at the air bag door and also provides support for the latter against a pushing force such as from a passenger which could otherwise push the door inward and separate the door from the cover assembly along the tear seam.

The flange 36 is designed to normally hinge and retain the air bag door 14 to the vehicle structure during its outward opening movement when the tear seam 16 is torn by the force of the inflating air bag and in doing so is highly stressed at its juncture 48 with the door as the flange portion 38 bends

to effect swinging movement of the door. However, at very low or cold temperatures such as -20°F and below, the typical plastic material suitable for the cover assembly in its primary application can become brittle to the point where the lower and major portion 46 of the door, that is forced by the inflating air bag to bend outward about the horizontally extending juncture 48 of the door with the flange 36, may fracture or break off at this highly stressed location or zone (see Figure 4) and enter into the passenger space 28. This is prevented in a very cost effective manner by the strategic addition of a flexible door tethering layer 50 of controlled thickness that is formed in place over the one side 52 of the mounting/hinge flange 36 adjoining the potential fracture zone 48, over this zone, and over the inside surface 54 of the potentially frangible door portion 46. The material forming the door tethering layer 50 is a flexible plastics material of a prescribed controlled thickness that is formed in place as described in more detail latter, bonds in its formation without an added adhesive to the material of the cover assembly, and remains flexible or ductile at temperatures substantially below that at which the material of the cover assembly 10 including the integral air bag deployment door 14 becomes brittle. Examples of such material for the tethering layer 50 that will remain flexible or ductile at temperatures as low as -60°F are polyurethane elastomers, polyester elastomers, and polyolefin elastomers. In addition, it will be understood of course that the tethering material while well suited for its application is not suited to meet the stiff requirements of the cover assembly.

The flexible tethering layer 50 extends horizontally substantially the entire length of the mounting/hinge flange 36 and is bonded to the side 52 of the flat flange portion 38 at a margin portion 56 of the tethering layer that extends laterally to the distal flange portion 40 so as to maximize the bonding area on this side of the potential fracture zone 48 and thereby maximize the retention of the tethering layer to the flange 36. The tethering layer 50 spans

and is bonded to the potential fracture zone 48 at an intermediate portion 58 of the tethering layer and is bonded to the inside surface 54 of the potentially frangible air bag door portion 46 at a margin portion 60 that extends laterally to near the lower edge of the door so as to maximize the bonding area of the tethering layer with this door portion and its retention to the flange 36.

Referring to Figure 4, the tethering layer 50 at its intermediate portion 58 that spans the potential fracture zone flexes when door breakage occurs because of cold plastic embrittlement to permit the broken door portion 46 to continue to swing outward and upward about the line of fracture at the flange 36 to provide for continue air bag deployment while retaining the broken door portion safely to the vehicle structure with the tethering layer 50 and flange 36. The bonded retention of the tethering layer over substantially the entire inside surface of the separated door portion 46 and that of the bending portion 38 of the flange 36 maximizes the retention forces available from the tethering layer 50 across the door fracture to retain the broken door portions 46 to the flange 36 and thus to the vehicle structure. And the controlled thickness of the tethering layer 50 is determined in relation to the tensile strength of its plastics material so as to not fail in bending tension at its intermediate portion 58 at the greatest anticipated forces acting thereon from the propelled mass of the broken door portion 46. However, it will also be understood that the intermediate bending portion 58 of the tether layer 50 could have a greater thickness than the adjoining margin portions 58 and 60 for greater tensile strength as necessary in a particular application to conserve material and/or space.

The cover assembly 10 including the integral air bag deployment door 14 and the mounting/hinge flange 36 is molded in one-piece at one time of the same plastics material such as that previously described which is suitable for the primary purpose of a cover assembly wherein it must be sufficiently stiff for self-support and resistant to heat. The cover assembly 10 is molded in

a conventional manner well known in the art and may be formed for example in an injection mold or reaction injection mold whose mold cavity completely defines the surfaces of the cover assembly including the groove defining the tear seam 16 in either the outside or inside surface.

Referring to Figures 5 and 6, there is shown the appearance side mold tool 70 of an injection mold used to mold the appearance or front side of cover assembly 10 which is shown in place as molded thereby in these illustrative views and wherein the flexible tethering layer is yet to be formed. And it will be understood that the injection mold for the cover assembly 10 further includes another mold tool (not shown) that defines the back side of the panel and cooperates with the mold tool 70 to form a mold cavity into which the plastics material for the panel is injected in molten form under pressure in a conventional manner. With the molded cover assembly 10 left in place in the mold tool 70 and the back side mold tool moved out of the way, the air bag deployment door tethering layer 50 may then be formed in place with an injection mold tool 72 that seats against the inside surface of the cover assembly over the area in which the tethering layer 50 is to be formed and which includes the side 52 of the mounting/hinge flange 36 and the inside surface 54 of the frangible door portion 46. It will also be understood that the cover assembly could be supported by a dedicated support tool that is much smaller than the cover assembly mold tool 70 and has a similar support surface that just spans the area of the outer side of the molded cover assembly opposite where the tethering layer is to be formed. The injection mold tool 72 is formed on its molding side with a tethering layer defining cavity 74 that is closed by the side 52 of the mounting/hinge flange 36 and the inside surface 54 of the frangible door portion 46 and defines therewith a closed mold cavity 76 that defines the entirety of the tethering layer shape.

The mold tools 70 and 72 with the cover assembly 10 located there between are clamped together in a conventional type plastics injection

molding machine (not shown) and the tethering plastics material as earlier described is injected in molten form under high pressure in a conventional manner through a passage 78 in the mold tool 72 into the closed mold cavity 76 to form the flexible tethering layer 50. It will also be understood that a low pressure mold tool with a tethering layer defining mold cavity like the cavity 74 in mold tool 72 but with the low pressure mold tool suitably adapted in a conventional manner for gravity molding, reaction injection molding, or resin transfer molding of the tethering layer with reactive components of the plastics material can also be used to mold the tethering layer in place on the inside surface of the cover assembly. In either case, the plastics material forming the tethering layer bonds without an added adhesive to the inside surface of the cover assembly to form a strong attachment thereto over the entire extensive interface between the tethering layer 50 and both the mounting/hinge flange 36 and the frangible door portion 46.

The tethering layer 50 may also be formed in place on the inside surface of the cover assembly by spraying the tether forming plastics material as illustrated in Figure 7. This is preferably accomplished with a mask 80 of controlled thickness that is laid against the side 52 of the mounting/hinge flange 36 and the inside surface 54 of the frangible door portion 46 in interfacing relationship therewith and has an opening 82 that defines the periphery of the tethering layer 50. The mask 80 has the desired thickness of the tethering layer or a slightly greater thickness and may be formed of metal or plastic and either by flexible so as to readily conform to the surface to be masked or be preformed with the required interfacing shape. The mask 80 is held in place by suitable means such as by flanges 84 fixed to a robot arm and the outer surface 86 of the mask is coated with a suitable release agent such as silicone to prevent the tether forming plastics material from adhering thereto.

With the mask 80 held in place on the inside surface of the cover assembly, the tether forming plastics material is sprayed through the mask

opening 82 onto the unmasked area of the panel to form the tethering layer 50 using a conventional type plastics spraying system 88 that includes a suitable mixing head 90 having a spray wand 92. The spraying system 88 operates in a conventional manner to effect spraying on command and wherein reactive components of the plastics material are delivered to the mixing head 90 by separate lines 94 and 96 and these components are mixed in the mixing head just prior to spraying with the wand 92. The mixing head 90 may be manipulated by an operator or a robot and the mixed plastics material is dispensed from the mixing head through the spray wand onto the unmasked area of side 52 of the mounting/hinge flange 36 and the inside surface 54 of the frangible door portion 46 as illustrated in Figure 7 to form the tethering layer to the desired controlled thickness. Then on setting of the sprayed plastics material, the mask is removed leaving the tethering layer in place and bonded without adhesive to the cover assembly.

Summarizing examples of the plastics materials that can be used in the above molding processes to form the tethering layer; the gravity molding material can be a thermoset material such as polyurethane, the resin transfer molding material can be a thermoset material such as polyester, the reaction injection molding material can be a thermoset material such as polyurethane, the spray molding material can be a thermoset material such as polyurethane, and the injection molding material can be thermoplastic material such as polyolefin.

As shown in Figures 8-10, 11-14 and 15, respectively, the second, third and fourth embodiments 10a-c of the cover assembly 10 each comprise an instrument panel generally indicated at 100a-c. In each of these embodiments the instrument panel 100a-c comprises a first plastics material and is configured to mount in the passenger compartment of the motor vehicle. An air bag door panel shown at 14a-c also comprises the first plastics material and is formed with the instrument panel 100a-c as a single integral and

unitary panel 14a-c, 100a-c. The door panel 14a-c is at least partially surrounded by the instrument panel 100a-c.

In each of the second through fourth embodiments, a hinge panel, shown at 50a-c, is connected to an inside surface 102a-c of the unitary panel 14a-c, 100a-c in a layered disposition. The inside surface 102a-c is disposed opposite an outside or "class A" surface 104a-c of the unitary panel 14a-c, 100a-c. The hinge panel 50a-c comprises a second plastics material that is more ductile and less brittle at low temperatures than the first plastics material. The hinge panel 50a-c is insert molded into an inside surface of at least one of the instrument panel 100a-c and the door panel 14a-c. As shown at 50b' in Figure 14, in other embodiments the hinge panel 50 may comprise sheet metal or both sheet metal and plastic. Metal is especially advantageous as a component of an aft edge of the hinge panel aligned with a tear seam due to increased rigidity which aids in distributing door opening forces more evenly along the tear seam to promote more uniform tear seam fracture and subsequent door opening.

As shown in Figures 8-15, the hinge panel 50a-c includes a hinge panel aft edge 110a-c aligned with an aft portion of the tear seam 16a relative to the direction of door opening during air bag inflation. The alignment of the aft portion of the tear seam 16a and the hinge panel aft edge 110a-c helps to guide tearing along the tear seam 108.

As shown in Figures 8-10, the door panel 14a of the second embodiment includes a hinge flange 36a extending transversely inward from the inside surface 54a. As is described in detail with respect to the first embodiment, above, the hinge flange 36a is configured to secure the door panel 14a to a structural member 44a. The hinge panel 50a spans a flange juncture zone, shown at 112a in Figures 8-10, where the hinge flange 36a integrally extends from the inside surface of the door panel 14a. The hinge panel 50a acts as a secondary hinge and a tether in the event the door panel

14a should fracture at the flange juncture zone 112a – or at any other point spanned by the hinged panel 50a. The hinge panel 50a is attached to the hinge flange 36a and door panel 14a in a layered disposition by insert molding.

As is also shown in Figure 8-10, a forward tear seam portion 108a of the weakened tear seam 16a runs parallel to and adjacent the panel juncture zone 112a of the second embodiment. The forward tear seam portion 108a delineates a boundary between a forward portion of the door panel 14a and the instrument panel 100a. The forward tear seam portion 108a completes a full 360° tear seam path for the tear seam 16a that defines the entire outline of the air bag door panel 14a. Therefore, upon air bag inflation, the entire door panel 14a is torn free of the instrument panel 100a and is tethered only by the hinge flange 36a. Alternatively the forward tear seam portion 108a may be omitted.

As shown in Figures 11-14, the hinge panel 50b of the third embodiment spans a panel juncture zone 106b between the door panel 14b and the instrument panel 100b. The hinge panel 50b acts as a secondary hinge between the door panel 14b and the instrument panel 100b during air bag deployment. The hinge panel 50b may lie flush with the inside surface. However, in other embodiments, the hinge panel 50b may be molded in a raised position to allow for a constant thickness of the first material over the unitary panel 14b, 100b.

As shown in Figures 11-14, the panel juncture zone 106b of the third embodiment may include a styling groove 108b separating at least a portion of the door panel 14b and the instrument panel 100b. The styling groove 108b may be formed by methods other than injection molding such as laser scoring, cutting or melting. The styling groove 108b promotes upward bending of the first plastics material at the hinge location by removing material that would otherwise impede such upward bending.

As shown in Figure 14, a urethane foam layer 120 may be disposed over the unitary panel 14b and a plastic skin layer 122 may be disposed over the foam layer. While the foam and skin layers 120, 122 are shown on the unitary panel 14b of the embodiment of Figure 14, such layers may also be included in any embodiment of the invention.

As shown in Figure 15, the instrument panel 100c of the fourth embodiment includes a collar 114 that integrally extends transversely inward from the inside surface 102c and from around the door panel 14c. The collar 114 defines a door-collar interface 116 along a region where the collar 114c extends from the unitary panel 14c, 100c. The collar 114 forms a sleeve for receiving an air bag canister assembly 18c. In other embodiments, the collar 114 may serve as a guide chute for a deploying air bag. The hinge panel 50c spans the door-collar interface 116. An inner portion 56c of the hinge panel 50c is attached to the collar 114 and an outer portion 60c of the hinge panel 50c is attached to the door panel 14. A styling groove 108c may be aligned with the portion of the door-collar interface 116 that the hinge panel 50c spans. The styling groove 108c is formed into the outside or "class A" surface 104c to aid upward bending of the door panel 14c.

In practice, air bag cover assemblies 10a-c can be made by first providing a mold having first and second mold portions. The first and second mold portions form a mold cavity when closed together. The mold cavity has a shape that complements the shape of whichever unitary panel 14a-c, 100a-c and hinge panel 50a-c is to be formed. A hinge panel 50a-c is formed from the second plastics material, metal or a combination thereof and is placed in the second mold portion. The hinge panel 50 is placed in a portion of the mold cavity in the second mold portion in a position spanning a portion of the mold configured to form the juncture zone 112a, 106b or interface 116 between the door panel 14a-c and either the instrument panel 100b of the

second embodiment, the hinge flange 36a of the third embodiment or the collar 114 of the fourth embodiment.

For example, to form a cover assembly 10a according to the second embodiment, i.e. a hinge-flange version of the invention, the mold cavity surface of the second mold portion is shaped to receive the hinge-flange 36a. The hinge panel 50a is placed on the mold cavity surface of the second mold portion in a position spanning a portion of the mold configured to form the flange juncture zone 112a between the hinge-flange 36a and the door panel 14a. In this case, the mold cavity surface of the second mold portion has a shape complementing that of the inside surface 102a of the unitary panel 14a, 100a. The mold is then closed by positioning the first mold portion on the lower mold portion. The first mold portion includes a mold cavity surface shaped to complement the shape of the outside or "class A" surface 104a of the unitary panel 14a, 100a. The first plastics material is then introduced into the mold cavity in molten form. The molten first plastics material is allowed to conform to the shape of the mold cavity and to solidify in the mold cavity. The mold is then opened and the completed assembly 10a is removed from the mold with the hinge panel 50a molded into the unitary panel 14a, 100a as shown in Figure 8.

A first embodiment of a vehicle passenger compartment console assembly constructed according to the present invention is shown at 210 in Figs. 16 and 17. Alternative embodiments of the console assembly are generally shown at 210a in Figures 18-21 and 210b and 210c in Figures 22 and 23, respectively. Reference numerals with the suffix "a" in Figures 12-21, the suffix "b" in Figure 22 and the suffix "c" in Figure 23 designate the alternative configuration of each element common to the embodiment of Figures 16 and 17. Unless the description indicates otherwise, where the description uses a reference numeral to refer to an element in Figures 16 or 17, I intend that portion of the description to apply equally to elements in Figures 18-21

indicated by the same reference numeral with the suffix "a", the elements in Figure 22 indicated by the same reference numeral with the suffix "b", and the elements in Figure 23 indicated by the same reference numeral with the suffix "c".

The floor console assembly 210 includes a console body 212 with an outer shell 214 having a size and shape that allow the console assembly 210 to fit in the area between the front driver seat 216 and the front passenger seat 218 of a motor vehicle. As shown in Fig. 16, the outer shell 214 has an elongated box shape with rounded corners and edges sculpted to flow into the interior contours of the automobile the console is installed in.

The first embodiment of the floor console assembly 210 includes an access opening 220 disposed in the console body outer shell 214. The access opening 220 is centrally located in an upper surface 222 of the outer shell 214 and is generally rectangular. The access opening 220 is defined by a pair of straight side edges 224 and by upwardly curved forward 226 and aft 228 edges. The forward 226 and aft 228 edges each include a semi-circular groove 230.

As is best shown in Fig. 17, the first embodiment also includes a module positioning apparatus 232 that is movably supported within the console body outer shell 214. The positioning apparatus 232 comprises a drum-type carrousel 236 supported for rotation about a horizontal central carrousel axis 238. The carrousel axis 238 is aligned parallel to the direction that the immediately adjacent passenger seats 216, 218 are facing, i.e. the direction of vehicle travel.

As shown in Fig. 17, the positioning apparatus 232 may include an electro-mechanical occupant-actuated drive mechanism 240 and may also include an occupant-actuated automatic module selection system 292. To select a module using the electro-mechanical drive mechanism 240 an occupant actuates the drive mechanism and causes it to continue rotating

modules past the access opening until a desired module appears in the access opening 220. With the automatic selection system, an occupant momentarily depresses a button or key corresponding to the desired module which causes the drive mechanism 240 to rotate the carrousel until the selected module appears.

Three storage modules 234 and/or appliance modules 242 are supported on the positioning apparatus 232 for rotational movement within the console body outer shell 214. In other embodiments the positioning apparatus may carry only two modules or may carry more than three modules. Other embodiments may also move the modules in other than a rotational motion.

The shape of each storage module is a cylindrical section approximating an elongated triangular prism with a single elongated arcuate plane as shown at 234 in Fig. 17. Other embodiments may include modules having different sizes and shapes. Storage modules 234 may also include contoured inserts designed to nest one or more loose articles.

An appliance module 242 may have any shape so long as that shape allows the appliance module 242 to fit within the confines of its assigned space within the carrousel 236. In the case of a carrousel with three equal-size compartments or sections, as shown in Fig. 17, the appliance module 242 must fit within a space approximating that defined by storage module 234. However, the module compartments or sections need not have the same size and shape. Some modules are larger than others to accommodate larger appliances. Examples of the types of appliances that may be built into the appliance modules 242 include computers, fax machines, modems, cellular telephones and hair-dryers.

The storage 234 and appliance 242 modules are sequentially rotatable through a displayed position adjacent the access opening 220. The displayed position is best shown in Fig. 17 as viewed through the access opening 220.

The carrousel-type positioning apparatus 232 allows passenger compartment occupants to select and retrieve any one of the storage 234 or appliance 242 modules and to gain access to its contents through the access opening 220.

As shown in Fig. 16, an access door 244 is slidably supported in the semi-circular grooves 230. The access door 244 has an arcuate shape to cover the access opening 220 in a closed position and may be slid to an open position revealing and providing access to the contents of whichever module 234, 242 is in the presented position.

A forward image display panel 246 in the form of a cathode ray tube (CRT) is supported in a forward end of the console body 212. The forward image display panel 246 is positioned to display images primarily to the occupants of seats 216, 218 positioned on either side of the console assembly 210.

An aft image display panel 248, also in the form of a CRT, is supported in an aft end of the console body 212. The aft image display panel 248 is positioned to display images primarily to occupants seated behind the console assembly 10. Image-producing electronic circuitry is included in an electronic computer game module 250 connected to the aft display panel 248 and, in response to occupant inputs, transmits signals that produce images on the aft display panel 248. In other embodiments, the image-producing electronic circuitry may not be included in a computer game module. Instead, it may be included in a device that, for example, converts broadcast microwave signals or information stored in magnetic media (videotape) into video images.

Occupant inputs to the electronic circuitry are passed through signal wires 52 from a remote-control unit 254. Audio signals may be transmitted to occupants via headphones 256. Alternatively, occupant inputs may be passed from the remote control unit 254 to the image-producing electronic circuitry by electromagnetic transmissions instead of wires.

This first embodiment 210 of the present invention reduces clutter by providing occupants with selective access to any one of a number of different storage 234 and appliance 242 modules and storing non-selected modules inside the center console 212. The electro-mechanical drive mechanism 240 and occupant-actuated automatic module selection system allow a driver to gain access to a module while diverting a minimum amount of attention from the task of operating the vehicle. The image display panels 246, 248 are conveniently located to display information to front and rear seat occupants, respectively.

The second embodiment of the vehicle passenger compartment console assembly is shown at 210a in Figs. 18-21. The assembly 210a includes an instrument panel console body 212a rather than a center console body 212 as in the first embodiment. The instrument panel console body 212a is supported in an instrument panel assembly 213 of the automobile. The instrument panel assembly 213 may be of any type known in the art to include the panel disclosed in United States Patent No. 5, 556,153 (the '153 patent). The '153 patent is assigned to the assignee of the present invention and is incorporated herein by reference.

The instrument panel console body 212a includes an outer shell 214a. An access opening 220a is disposed in the outer shell 214a and a positioning apparatus 232a is movably supported within the outer shell 214a. Three storage modules 234a are also disposed within the shell 214a and are movably supported on the positioning apparatus 232a. The storage modules 234a are sequentially movable between one or more concealed positions and displaced from the access opening 220a and a displayed position adjacent the access opening 220a. The concealed positions are shown at 260 in Figs. 20 and 21. The displayed position is shown at 262 in Figs. 18 and 20.

The positioning apparatus 232a is configured to support an one of the storage modules 234a in the display position 262 while simultaneously

supporting the other two storage modules 234a in a concealed position 260. As with the first embodiment, this allows a passenger compartment occupant to gain physical access to a module 234a and its contents through the access opening 220a while leaving other modules 234a concealed within the shell 214a.

The positioning apparatus 232a comprises a drum-type carrousel 236a or turnstile supported in the instrument panel console body 212a for rotation about a generally vertical carrousel axis 238a. The storage modules 234a are defined by four vertically oriented rectangular divider panels shown at 264 in Figs. 18, 20 and 21, a semi-circular cap panel shown at 266 in Fig. 18 and a base panel shown at 268 in Figs. 18, 20 and 21. The base panel 238 generally matches the shape of the cap panel 266. The divider panels 264 extend radially and integrally outward from a common point at the vertical axis 238a. Upper and lower ends of the divider panels are connected to or integrally formed with the cap panel 266 and the base panel 268, respectively.

Other embodiments may include any suitable divider and cap panel configuration. As with the first embodiment the carrousel 236a of the second embodiment may also incorporate appliance modules 234a and/or contoured inserts designed to nest one or more loose articles.

Rotational support may be supplied by any means known in the art to include axle rods 270 extending along the vertical axis 238a upward from the cap panel 266 and downward from the base panel 268 through or into journal bearing assemblies 272. The carrousel 236a may be molded as a single piece from plastic or other suitable materials, or the panels 264, 266, 268 may be connected together by adhesives, fasteners or any other means known in the art.

The carrousel 236a is at least partially housed within a central stack portion 274 of the instrument panel console body 212. The central stack portion 274 is described in detail in the '153 patent. The access opening 220a

is defined by a rectangular opening in an aft end of the central stack portion 274.

The carrousel 236a is rotationable to a closed position as shown in Fig. 19. The carrousel 236a includes a flat, generally vertical face panel shown at 276 in Figs. 19-21. The face panel 276 has the same approximate rectangular shape as the opening in the central stack portion 274 of the instrument panel console body 212 that defines the access opening 220. The face panel 276 is disposed across and generally closes the access opening 220, i.e. the rectangular opening, when the carrousel 236a is in the closed position.

The third embodiment of the vehicle passenger compartment console assembly is shown at 210b in Figure 22. According to the third embodiment the positioning apparatus 232b comprises a drum-type carrousel 236b supported "Ferris-wheel" style in the instrument panel console body 212b for rotation about a generally horizontal axis 238b. The carrousel axis 238b is disposed transverse to the vehicle direction of travel to more conveniently present the contents of the storage modules 234b to vehicle occupants. The display position is located at the aft-most portion of the carrousel 236b where the contents of a storage module 234b are visible and/or physically accessible through an access opening 220b defined by a small rectangular window in a front panel 278 covering the center stack opening. The storage modules 234b of the drum-type carrousel 236 include a radio receiver 280, a CD player 282, a cell phone 284, HVAC controls 286, and open compartments for storage 234b. Other embodiments may include any number of other such components. All of the components in the storage modules 234b are selectively movable to the display position adjacent the access opening 220b through occupant actuation of a selector switch 288 mounted on the console above the rectangular opening in the central stack portion 274.

Actuation may alternatively be accomplished by any other suitable means known in the art. In addition, such actuation means may be mounted on any convenient surface within the vehicle passenger compartment.

The fourth embodiment includes a "lazy Susan-type" positioning apparatus 232c that includes a platform 290 having any number of generally pie-shaped storage regions 234c. The platform 290 is rotatably supported within the console body outer shell 214c. The positioning apparatus 232c is configured to rotate the platform 290 and move a selected one of the storage regions 234c to a display position adjacent the access opening 220c while simultaneously moving the other of the storage regions 234c into a remote position displaced from the access opening 220c. This allows a passenger compartment occupant to gain physical access to an item stored on one of the storage regions 234c of the platform 290 through the access opening 220c while leaving other items stored on the other storage regions in positions within the shell 214 that are remote from the access openings 220c.

As with the other embodiments, the positioning apparatus 232c includes an electro-mechancal occupant-actuated drive mechanism 240c and an occupant-actuated automatic module selection system 292c. Similar to the first embodiment, the fourth embodiment includes an access door 244c that is slidably supported across the module access opening 220. The door 244c is shaped to cover the access opening 220 when moved to a closed position and uncovers the access opening 220c when moved to an open position as shown in Fig. 23.

As with previously described embodiments, the storage spaces 234c on the lazy-Susan type platform 290 of the fourth embodiment are adapted to permanently or semi-permanently accommodate various appliances or to temporarily store various loose items.

Unlike the previously described embodiments, the positioning apparatus 232c of the fourth embodiment includes no divider panels 264, no

cap panel 266 and only a single axle rod (not shown) extending axially downward from the base panel 268.

A headliner assembly for lining the roof of the passenger compartment of a vehicle is generally shown at 310 in Figs. 24-26. The headliner assembly 310 includes a unitary substrate, generally indicated at 312 in Figs. 24-26, that is configured to mount to a vehicle in a position generally covering a lower surface of a passenger compartment roof (not shown). The substrate 312 includes an upper substrate surface shown at 314 in Figs. 24-26 and a lower substrate surface shown at 316 in Fig. 26. The lower substrate surface 316 is disposed opposite the upper substrate surface 314. The substrate 312 may be made of any suitable moldable material to include various plastics or fiberglass reinforced polyester resin.

A decorative cover, shown at 318 in Fig. 26, is supported on the lower substrate surface 316. The decorative cover 318 may be in the form of a fabric or solid layer of any suitable material.

Cavities, shown at 320, 322, and 324 in Fig. 26 are formed into the substrate 312 between the upper substrate surface 314 and the lower substrate surface 316. One of the cavities, shown at 320 in Fig. 26 is defined by an elongated receptacle or conduit, shown at 326 in Figs. 24-26. The conduit 326 is configured to support electrical wiring or fiber optic cabling.

Two of the cavities, shown at 322 in Fig. 26, are defined by generally rectangular pockets, shown at 328 in Figs. 24-26. As best shown in Fig. 26, the pockets 328 are configured to hold energy absorbing foam 334. In other embodiments, the pockets 328 may be filled with acoustic energy or sound absorbing foam or other energy-absorbing materials or structures. In still other embodiments, the pockets 328 may be configured to absorb passenger head impact energy without the aid of foam filling.

The largest of the cavities, shown at 324 in Fig. 27, is defined by a contoured duct shown at 330 in Figs. 24-26. The duct 330 is configured to direct airflow into a vehicle passenger compartment.

Each of the cavities 320, 322, 324 is preferably integrally formed in the substrate 312. In other words, the conduit 326, compartments 328 and duct 330 are integrally formed with the substrate 312 as a single unitary piece.

A foam layer, shown at 332 in Fig. 26, is preferably disposed on a lower surface of the substrate 312 and the decorative outer cover 318 is disposed on a lower surface of the foam layer 332. The foam layer 332 and decorative outer cover 318 may be fastened in place by adhesives or any other suitable means.

Cavity 324 and air duct 330 protrude upward from the substrate 312 and have rounded contours to facilitate airflow. At one end of the air duct 330 the headliner assembly 310 includes an air inlet opening shown at 336 in Figs. 24 and 25. The air inlet opening 336 is disposed adjacent a peripheral edge 338 of the headliner assembly 310 and is configured to receive air into the air duct 330 from a vehicle air handling system, e.g. a heating, ventilating and air conditioning (HVAC) system (not shown). Three air outlet openings are shown at 340 in Figs. 25 and 26. The air outlet openings 340 are spaced from each other and are spaced from the air inlet opening 336. The air outlet openings 340 are disposed in a triangular array and extend through a thickness of the headliner assembly 310. The air outlet openings 340 direct air from the vehicle air handling (HVAC) system into the passenger compartment. The air duct 330 extends between and connects the air inlet opening 336 and the air outlet openings 340 to provide gaseous communication between the air inlet opening 336 and the air outlet openings 340.

A directional air outlet register, shown at 344 in Fig. 26, is rotatably mounted within each air outlet opening 340 and protrudes from an underside

surface 342 of the headliner assembly 310. The directional air outlet registers 344 allow passengers to direct air to various parts of the passenger compartment.

Similar to the air duct 330, the conduit 326 protrudes upward from the substrate 312. The conduit 326 is configured to support wires or cables 346 that will conduct electricity, light, or other forms of electromagnetic radiation to various points in the headliner assembly 310. More specifically, the conduit 326 defines an elongated tube. The cross-sectional shape of the conduit 326 may be any suitable shape for holding cables 346. The headliner assembly 310 includes a cable inlet opening 348 at one end of the conduit 326 and disposed adjacent the peripheral edge 338 of the headliner assembly 310. The cable inlet opening 348 is positioned to receive cables 346 leading to the vehicle roof from a vehicle electrical or fiber optic system.

Two cable outlet openings, shown at 350 in Figs. 24-26 are spaced from the cable inlet opening 348. The cable outlet openings 350s are disposed adjacent respective electrical or fiber-optic light fixtures shown at 352 in Figs. 24-26. In the present embodiment, the fixtures 352 are electrical dome lights. However, in other embodiments, each fixture 352 may include, for example, a fiber optic dome or indicator light. Each fixture 352 may also include a roof-mounted electronic accessory such as a radio, television, computer monitor, tape deck or CD-player that is supported on or adjacent the headliner assembly 310. The cable outlet openings 350 are disposed adjacent such fixture 352 to allow the electrical or fiber optic cables to be connected to the fixtures 352. The cable conduit 326 extends between and connects the cable inlet opening 348 and the cable outlet openings 350.

The pockets 328 support energy absorbing foam 334 in strategic locations in the substrate 312. Each pocket 328 includes an inner wall 354 that envelops and seals the energy-absorbing foam 334 within the pocket 328. The foam-filled cavities 322 of the pockets 328 are disposed in an array at spaced

locations where passenger head impact is likely to occur if passengers are subjected to sudden vertical acceleration components. The two pockets 328 of the present embodiment are disposed directly above the seating locations for the driver and the front seat passenger as shown in Figs. 24-26.

The headliner assembly 310 may be constructed according to the present invention by first fabricating a two-piece clamshell-type blow mold as is generally indicated at 356 in Figs. 27 and 28. The mold 356 is fabricated to include a hollow portion, shown at 358 in Figs. 27 and 28, for receiving molten parison 360 and shaping exterior contours of the headliner substrate 312 to be formed. In fabricating the mold 356, the hollow portion 358 of the mold 356 is shaped to complement desired exterior contours of the headliner substrate 312 to be formed. As shown in Figs. 27 and 28, the hollow portion 358 is also configured to include enlarged regions 362, 364, 366 corresponding to respective cavities 320, 322, 324 to be formed in the substrate 312. An additional hollow portion forms an air passage, shown at 370 in Figs. 27 and 28, at one end of the mold 356 when the two halves are joined together. The air passage is configured to receive an air injector such as a blow pin 374. The air passage 370 branches to the enlarged regions 362, 364, 366 of the hollow portion 358 of the mold 356 to allow air to be injected into each of the enlarged regions 362, 364, 366 from the air injector.

Once the mold 356 has been fabricated, a molten parison 360 is extruded downward between the open mold halves and into the hollow portion 358 within the blow mold 356. As shown in Fig. 27, a parison extrusion die 372 extrudes the parison 360 in the form of an oblong, hollow tube. The mold halves are then closed together around the tubular parison 360, pinching together opposed walls 363, 365 of parison along outer boundaries of the enlarged regions 362, 364, 366. Pressurized gas is then injected into a hollow center region 367 of the molten tubular parison 360 causing the parison 360 to expand within the enlarged regions 362, 364, 366 of

the hollow portion 358 of the mold 356. The pressurized gas also causes the parison 360 to expand within the gas passage 370, conforming to the contours of the gas passage 370 as shown at 380 in Figs. 24-26A. After the cavities 320, 322, 324 have been formed in the parison 360, the blow pin 374 may be removed from the parison 360.

The parison 360 is then allowed to harden into the desired shape of the headliner substrate 312. The blow mold 356 is then opened and the headliner substrate 312 is removed. Following hardening and removal of the headliner substrate 312, the foam layer 332 is adhesively applied to the substrate lower surface 316 and the decorative outer cover 318 or skin is adhesively applied to the lower surface of the foam layer 332. Alternatively, the decorative outer cover 318 and foam layer 332 may be placed in the blow mold 356 before molding and integrally joined during molding. As other alternative, the outer cover 318 and foam layer 332 may be coextruded at the same time as a multi-layered parison.

As shown in Fig. 26, foam 334 is provided within the pocket cavities 322 by inserting nozzle portions 376 of one or more foaming machines into the pocket cavities 322 and filling the pocket cavities 322 with the foam 334. Preferably, the foam is urethane foam produced via a reaction injection molding process. This may be accomplished either before or after the headliner substrate 312 is removed from the mold 356. Foam injection may also occur instead of gas injection in forming the pocket cavities 322 rather than after gas injection and pocket cavity formation. After foam injection is complete the foam injection nozzles 376 are then withdrawn from the pocket cavities 322 and the foam 334 allowed to cure.

Referring to Figures 29 and 30, there is illustrated a molded motor vehicle instrument panel 410 as installed in a motor vehicle structure generally designated as 411. The instrument panel 410 has an opening 412 on the driver side for the installation of an instrument cluster (not shown) and an

air bag deployment door 414 of desired shape, in this case rectangular, on the passenger side whose entire or partial perimeter, in this case entire, is defined by a frangible tear seam 416 molded in the instrument panel. The tear seam 416 may be formed by a groove either in the face of the panel as shown or by a similar groove in the back side of the panel to hide the tear seam from view as is well known in the art or by other methods known to the art of forming an integral but frangible tear seam. When installed on the vehicle structure 411, the instrument panel covers an air bag system 418 that is located behind the instrument panel directly behind the air bag door 414 and is mounted on a sheet metal portion 420 of the vehicle structure. The air bag system 418 is of a conventional type that includes an inflatable air bag 422, an inflator 424 and an impact sensor 426 that on vehicle impact triggers ignition of the inflator to inflate the air bag for deployment into the passenger space 428 directly in front of a passenger seated on this side.

The instrument panel 410 is an injection molded one-piece part of generally uniform wall thickness and is formed of a first plastics material and preferably a suitable commercially available thermoplastic material such as polypropylene, polycarbonate, and styrene maleic anhydride that provides sufficient stiffness so that the panel is self-supporting to maintain the desired shape and has sufficient heat resistance to resist deformation due to heat in its interior vehicle environment where it is located immediately behind the windshield (not shown). The groove forming the tear seam 416 is made deep enough in relation to the wall thickness of the instrument panel and the strength of the plastic material so as to sufficiently weaken the wall section at the tear seam to the point that it is torn by the force of the inflating air bag acting against the back side of the air bag door and creates on its separation from the instrument panel an opening 430 therein for the deployment of the air bag as illustrated in Figure 33 and described in more detail later.

The instrument panel 410 is fastened to portions of the vehicle structure 411 at various locations outside the area of the air bag door with one such location being shown in Figure 30 wherein a sheet metal screw 432 fastens the panel at a lower edge thereof beneath the air bag door to a sheet metal portion 434 of the vehicle structure. And it will be understood that similar screws or other conventional type fasteners are used at other locations outside the area of the air bag door to securely fasten the instrument panel in place on the vehicle structure.

The air bag door 414 in the instrument panel 410 is separately fastened to the vehicle structure by an elongated mounting/hinge flange 436 that is molded integral with the back side of the door and extends horizontally along substantially the entire length and adjacent to the upper edge thereof as seen in Figures 29 - 31. The flange 436 has a flat portion 438 that extends transversely inwardly of the door a substantial distance and terminates in a flat, angled, horizontally extending, distal portion 440 that is fastened along its length by bolts 442 to a sheet metal portion 444 of the vehicle structure. The flange 436 is also formed with a uniform thickness and acts as a cantilever hinge to normally provide for outward swinging opening movement of the door when the door is separated along the tear seam from the instrument panel for air bag deployment. Prior to such air bag door separation, the flange 436 acts to fasten the instrument panel to the vehicle structure at the air bag door and also provides support for the latter against a pushing force such as from a passenger which could otherwise push the door inward and separate the door from the instrument panel along the tear seam.

The flange 436 is designed to normally hinge and retain the air bag door 414 to the vehicle structure during its outward opening movement when the tear seam 416 is torn by the force of the inflating air bag and as such serves as a primary tether for the door 414 to retain connection with the vehicle structure 411. In doing so, the flange 436 is highly stressed at its

juncture 446 with the back side of the door as a portion 438 of the flange bends to effect swinging movement of the door. The material of the panel 410 and hence the flange 436 is flexible in a limited temperature range encompassing normal operating temperatures for most vehicle applications (e.g. 0°F and above). However, at very low or cold temperatures such as -20 degrees Fahrenheit and below, the typical commercially available plastics material suitable for the instrument panel in its primary application can become brittle to the point where the lower and major portion 448 of the door that is forced by the inflating air bag to bend outward about the horizontally extending juncture 446 of the door with the flange portion 438 may fracture or break off at this highly stressed zone (see Figure 33) and be flung into the passenger compartment. This is prevented in a very cost effective manner by the strategic addition of an elongated flexible supplemental tethering hinge 450 that is formed from a sheet of strong flexible material that is efficient and relatively more flexible or ductile than the plastics material of the panel 410 at temperatures substantially below that at which the material of the instrument panel 410 becomes brittle so as to tether the door in the event the highly stressed zone 446 fractures due to embrittlement of the panel material. Examples of such material for the hinge 450 are thermoplastic materials such as polyvinyl chloride, coated nylon and Kevlar, thermosetting materials such as polyurethane and polyester, metal mesh screen, and a woven fabric of fibers formed of such plastic materials or natural fibers such as cotton or hemp.

According to the embodiment of Figures 29-33, the flexible tethering hinge 50 extends horizontally substantially the entire length of the mounting/hinge flange 436 (see Figure 31) and is fastened along one horizontal margin 452 of the hinge 450 on one side of the critical juncture zone 446 to the flat portion 438 of the mounting/hinge flange at a location remote from this potential fracture zone by fastening means such as rivets 454. The

tethering hinge 450 is fastened along another horizontal margin 456 parallel to the margin 452 and on the other side of this potential fracture zone to the inner side of the potentially frangible air bag door portion 448 by fastening means that cannot be observed at the outer side of the door. For example, the latter fastening means can be hot staked bosses 458 that are provided on the inner side of the door as shown in Figures 30, 31 and 33 such as by being molded integral therewith or friction welded thereto or the hidden fastening means may be a suitable adhesive 460 as shown in Figure 32. Examples of suitable adhesives for this purpose are polyurethanes and polyolefins. In the case of where rivets and bosses are used to fasten the tethering hinge at both its margins 452 and 456 respectively and where a woven fabric as above described is employed as the tethering hinge, both of the margins 452 and 456 preferably comprise one or more folds to provide increased strength at their points of attachment to the mounting/hinge flange 436 and the potential break away door portion 448. Where an adhesive is used to fasten the woven fabric tethering hinge to the door, only the margin 452 is preferably provided with one or more folds to reinforce its attachment by the rivets 454 or other suitable mechanical fasteners to the mounting/hinge flange 436.

The tethering hinge 450 has a portion 462 intermediate its margins 452 and 456 that spans the potential fracture Zone 446 and flexes when door breakage occurs as illustrated in Figure 33 to permit the broken door portion 448 to continue to swing outward to provide for air bag deployment while retaining the broken door portion to the vehicle structure. The intermediate portion 462 of the flexible tethering hinge 450 is preferably provided with an outward fold 463 in its installed condition as shown in Figure 30 that unfolds as shown in Figure 33 on the fracturing off of the door portion 448 from the mounting/hinge flange 436 to minimize the amount of stretching that is required of the tethering hinge between it attaching means 454 and 458 or 460

to allow deployment of the air bag while retaining the broken door portion to the vehicle structure.

According to another embodiment of the invention, illustrated in Figures 34-37, the supplemental tethering hinge 450′ is molded or otherwise formed separately from the panel 410 from a second plastics material that is different from the plastics material used for the panel. The construction of the panel 410, the vehicle support structure 411, and air bag system 418 may be the same as that described above for the first embodiment of Figures 29-33, and hence the same reference numerals will be used for those components.

The second plastics material for the supplemental tether hinge 450′ is one that exhibits relatively greater flexibility or ductility than the material used for the panel 410 at temperatures below that which the plastics panel material becomes unacceptably brittle. Suitable plastics materials for the supplemental tethering hinge 450′ include polyolefin elastomer, polyurethane elastomer, polyester elastomer, silicon or rubber modified plastic; however, the means and method by which the hinge 450′ is attached to the panel is different than that described previously for the first embodiment.

As illustrated diagrammatically in Figure 37, the panel 410 and tethering hinge 450′ are formed separately from one another (e.g. molded from the aforementioned first and second plastics materials, respectively) and are subsequently brought together and joined in a subsequent welding operation by means of which the panel 410 and tethering hinge 450′ become permanently fused to one another.

As shown in Figure 34, the hinge 450′ is a sheet-like member having a flange portion 452′ that overlies a surface of the flange 436 adjacent the door 414 of the panel 410 and conforms generally to the size and shape of the flange 436 in its preferred construction. The hinge 450′ can be formed from sheet stock; formed by injection molding; or formed by other well known molding techniques such as compression molding, vacuum molding or the

like. The hinge 450′ also has an integral door portion 456′ that extends across the inner side surface of the door 414 at least to the extent that the hinge 450 does (as seen in Figure 30) and preferably across the majority of the inner side surface so as to have the same general size and shape as the door 414, as illustrated in Figure 34 to provide uniform flexture of the door 414. When installed, the door portion 456′ of the hinge 450′ is generally coextensive with the door 414 and extends across and covers the air bag 422, but does not extend across the preformed tear seam 416, as can be seen in Figure 34, in order to retain the designed in frangibility of the tear seam 416. As with the hinge 450 of the first embodiment, the tethering hinge 450′ has an integral intermediate portion 462′ between the hinge and door portions 452′, 456′ , that spans or bridges the highly stressed juncture zone 446 between the flange 436 and door 14 of the panel 410 and is provided for the same reason. The fold 463 provided in the embodiment of Figure 30 is not required in this embodiment because the tether is more elastic than that in the first embodiment.

The preferred means and method of securing the supplemental tethering hinge 450′ in position on the panel 410, according to the second embodiment, is by welding. In which the panel 410 and tethering hinge 450′ are heated sufficiently at their interface at selected locations to melt and thereby fuse the two layers together at weld joints 470, illustrated schematically in Figures 34 and 36. One skilled in the art of welding plastics will appreciate that any of a number of known welding techniques could be employed to join the two plastic layers including, for example, welding techniques such as ultrasonic, vibration, induction, hot plate conduction, electromagnetic radiation, microwave radiation, and radio frequency welding to name a few. The selection may depend in part on availability of the equipment, economics, and suitability of the materials for the process. Whatever technique is selected, it should be one that develops a sufficient

fusing of the materials strong enough to withstand the load applied to the tethering hinge 450′ upon deployment of the air bag 422 so as to maintain connection with both the door 414 and the flange 436.

Figure 35 illustrates schematically the general arrangement that may be employed for welding the hinge 450′ to the panel 410. As illustrated, the tethering hinge layer 450′ is positioned and held by a suitable clamping fixture 472 against the panel layer 410. The fixture 472 may be of the type having a fixed lower platen 474 against which the tethering hinge layer 450′ may be placed and an upper movable platen 476 that is movable relative to the lower platen 474 into and out of engagement with the panel layer 410 to clamp and release, respectively, to the door 414 of the panel 410 and tethering hinge 450′ layers. The particular configuration of the clamping fixture tooling 472 will depend, of course, on the contour and accessibility limitations imposed by the panel 410 and they also differ depending on the welding technique employed. The clamping fixture 472 may also provide access to the weld-forming tooling, shown schematically in Figure 35 at 478 as being accessible through an opening in the lower platen 474 of the fixture 472 and movable into and out of engagement with the tethering hinge layer 450′ to develop the weld joints 470. It is contemplated that one skilled in the art of welding plastics will appreciate that the disclosed clamping fixture and welding tooling is merely schematic to illustrate the general arrangement that may be utilized and that the particular configuration and arrangement of the tooling will be dictated, in part, on the configuration of the panel 410 and the welding process utilized.

The particular pattern of weld joints 470 will vary according to the requirements of the specific application. For example Figure 34 shows the employment of a plurality of discrete, spaced apart weld joints 470 joining the flange portion 452′ of the hinge 450 to the flange 436 of the panel 410, and joining the door portion 456′ to the door 414 of the panel 410. More or less

welds could be utilized. For instance, all or a substantial portion of the contacting interface could be welded if required. In any case, the application of the welding should be carried out so as to not affect the appearance of the outer exposed, so-called "class A" surface of the panel that is seen by the occupant. In other words, the development of the weld joints 470 should be controlled so that when formed, they are not visibly detectable on the class A surface (e.g. there should be no melting, depressions, or other weld-induced imperfections on the class A surface).

By molding the tethering hinge 450' separately from the panel 410, it allows the panel 410 and tethering hinge 450' to be tested individually for performance before being joined and further simplifies the application of the tethering hinge material 450' to the back side of the panel 410 more particularly in applications in which the panel 410 has a complicated contour, including undercut regions which would make it difficult to mold the tethering hinge 450' in place against the panel 410.

A cover assembly for an inflatable restraint assembly, generally indicated at 510 in Figures 38 and 39 is generally shown installed in an automotive instrument panel 511. The assembly 510 comprises an air bag door generally indicated at 512 and a hard plastic rectangular frame-shaped collar generally indicated at 514 in Figures 38 and 39. The air bag door 512 is integrally formed in the collar 514 as a single, unitary panel 516. The assembly 510 also includes a retainer portion 518 of the instrument panel 511. The unitary panel 516 is fastened across an opening 520 in the retainer portion 518 of the instrument panel 511 as shown in Figures 38 and 39. A layer of foam, shown at 519 in Figure 39, covers the retainer 518 and the unitary panel 516. A skin or layer of cover material, shown at 556 in Figure 38, is disposed over the foam layer 519.

The retainer 518 includes a depressed rim portion shown at 522 in Figures 38 and 39. The depressed rim portion 522 of the retainer 518 is

configured to support the collar 514 of the unitary panel 516. When the collar 514 is seated on the depressed rim portion 522 of the retainer 518, respective outer surfaces 524, 526 of the instrument panel retainer 518 and the unitary panel 516 lie flush with one another as is best shown in Figure 39. Along an upper edge 528 of the rectangular opening 520 in the retainer portion 518 of the instrument panel 511, the depressed rim portion 522 forms an elongated trough 530. The elongated trough 530 has a generally U-shaped cross section with sidewalls 532 that angle outwardly as shown in Figure 39. As is also best shown in Figure 39, an upper edge 534 of the collar 514 of the unitary panel 516 is shaped to complement the shape of the elongated trough 530 of the depressed rim portion 522 of the retainer 518. The retainer 518 may also include gussets 536 supporting the elongated trough portion 530. The gussets 536 help to insure that bending occurs in the unitary panel 516 in a hinge region 538 where the air bag door 512 merges with the collar 514 rather than in the retainer 518 where the elongated trough 530 merges with a surrounding portion 540 of the retainer 518.

The thickness of the air bag door portion 512 of the unitary panel 516 is less than that of the collar 514 except where the air bag door 512 includes a generally U-shaped region 542 of increased thickness. The region of increased thickness 542 is formed by an integral elongated extension of material having a trapezoidal cross-section as shown in Figure 39. This region of increased thickness 542 defines one side of a weakened area or frangible tear seam shown at 544 in Figures 38 and 39. The region of increased thickness 542 helps to confine tearing and/or breakage to the tear seam 544. The tear seam 544 in the unitary panel 516 defines at least a portion of the outline of the air bag door 512. The tear seam 544 is configured to help guide tearing and/or breakage under the force of air bag inflation. In the embodiment of Figures 38 and 39, the tear seam 544 is formed in an inner surface of the unitary panel

516. However, in other embodiments, the tear seam 544 may alternatively be included on the outer surface 526 of the unitary panel 516.

The tear seam 544 partially defines a U shape with rounded corners leaving an integral or "living" hinge region, shown at 538 in Figures 38 and 39, between upper ends of the U shape which the air bag door 512 hinges around after being torn and/or broken open by a deploying air bag. In other embodiments the tear seam 544 may have other suitable shapes such as rectangular or circular and may or may not include an integral hinge region.

The tear seam 544 is formed during the integral molding of the unitary panel 516. However, in other embodiments the tear seam 544 may instead be formed by other methods such as gas-assisted injecting molding, machining using computer numerical control equipment (CNC), laser scoring or any other suitable method known in the art.

The unitary panel 516 includes approximately 520 heat stake bosses 546 that integrally extend from a back surface of the collar portion 514 of the unitary panel 516. The heat stake bosses 546 are integrally formed with the unitary panel 516 but may be post-applied by any suitable adhesive method in other embodiments.

Surrounding the rectangular opening 520 in the retainer 518 in the depressed rim portion 522 of the retainer 518 is a row of small through-holes 548 configured and positioned to receive the approximately 20 heat stake bosses 546. The bosses 546 are heat staked to form heads on an inside surface 550 of the depressed rim portion 522 of the retainer 518 as shown in Figure 39.

Other embodiments may use other suitable fasteners such as pop rivets in place of heat stake bosses 546 to fasten the collar portion 514 of the unitary panel 516 to the retainer 518. For example, Figure 40 shows fasteners 552 that extend through holes in both the unitary panel 516 and the retainer 518.

The unitary panel 516 also includes an elongated ridge 554 that integrally extends from the outer surface 526 of the unitary panel 516. The

ridge 554 has a right-triangular cross-section the vertical side of which extends perpendicularly outward from the outer surface of the collar 514 opposite the tear seam 544. The ridge 554 is included to reduce foam thickness along a line running parallel to and adjacent the tear seam 544 in the unitary panel 516. The line of reduced foam thickness helps guide foam layer breakage and reduces foam fragmentation when the air bag door is forced open.

As is best shown in Figure 39, the foam layer 519 is disposed over and is adhered to the outer surface 524 of the instrument panel retainer 518 and the outer surface 526 of the unitary panel 516. The skin 556 is disposed over and is adhered to an outer surface 525 of the foam layer. Because the respective outer surfaces of the retainer 518 and the unitary panel 516 lie flush with one another, the presence of the unitary panel 516 causes no disruption in the smooth outer class-A surface of the skin. In other embodiments, the skin 556 may be weakened along the same outline as the tear seam 544 and/or the ridge 554 on either the inside or outside surface or may include a styling groove or other feature identifying the location of the SIR door to the vehicle occupant.

In the present embodiment the trim panel that is configured to support the unitary panel 516 is an instrument panel 511. However, in other embodiments, the unitary panel 516 may be configured to be mounted in other vehicle panels.

The unitary panel 516 may comprise any suitable plastics material to include polyurethane (PU), thermoplastic elastomers (TPE), thermoplastic urethanes (TPU), thermoplastic olefins (TPO), or polyesters. The retainer 518 may comprise any suitable plastics material to include acrylonitrile-butadiene styrene terpolymer (ABS), styrene maleic anhydride copolymer (SMA), polyphenylene oxide (PPO), polypropylene (PP), polyurethane (PU) or polycarbonate (PC).

In practice, the cover assembly 510 is constructed by first forming the instrument panel retainer 518 and the unitary panel 516. The unitary panel 516 is formed by injection molding to include the heat stake bosses 546 and the ridge 554. The skin 556 is formed either as a cast shell, by vac forming or by spaying. The foam layer 519 is formed by foaming-in-place, i.e. injecting foam between the retainer 518 and the skin 556.

The instrument panel retainer 518 is formed by injection molding or other suitable methods to include the rectangular opening 520 and the openings 548 for receiving the heat stake bosses 546. The unitary panel 516 is then assembled to the instrument panel retainer 518 in a position spanning the rectangular opening 520. The panel 516 is assembled to the instrument panel retainer 518 by first inserting the heat stake bosses 546 into the small through-holes 548 in the depressed rim portion 522 of the retainer 518. When the panel 516 is seated in the depressed rim portion 522, distal ends of the heat stake bosses 546 protrude from the through-holes 548. The protruding distal ends of the heat stake bosses 546 are then heat staked, i.e. melted, to form heads. The skin 556 is then placed in a mold along with the assembled retainer 518 and unitary panel 516, and foam is injected into the mold between them.

1. A method of forming a motor vehicle instrument panel with an integral air bag deployment door comprising the steps of:

molding an instrument panel with a first plastics material to a desired shape and with an integral air bag deployment door whose opening is at least partially defined by a tear seam formed by a groove molded in one side of the panel; and forming a flexible bonded door tethering layer of a second plastics material on an inside surface of at least one of the instrument panel and door, and spanning a frangible portion thereof at the inside surface wherein the second plastics material has the characteristics of bonding to the first plastics material and remaining ductile to a substantial degree at low temperatures substantially below the temperature at which the first plastics material becomes brittle to thereby form a flexible tether that retains the frangible portion when the frangible portion breaks away because of embrittlement of the first plastics material at the low temperatures on tearing of the tear seam and opening movement of the door by an inflating air bag pressing against the inside surface of the door and wherein the tethering layer is formed by one of the following steps: (a) by injection molding the second plastics material against the inside surface; or (b) by forming a mask having an opening conforming to a perimeter of a desired tethering layer, laying the mask against the inside surface, and spraying the second plastics material through the opening in the mask and onto the inside surface to form the bonded layer; or (c) by gravity molding the second plastics material on the inside surface; or (d) by reaction injection molding the second plastics material on the inside surface; or (e) by resin transfer molding the second plastics material on the inside surface; or (f) by locating an injection mold tool against the inside surface, and injection molding the second plastics material in the mold tool against the inside surface; or (g) by locating a low pressure mold tool against the inside surface, and molding the second plastics

material in the mold tool on the inside surface at a low pressure less than high pressure injection molding.

2. A cover assembly for concealing an inflatable air bag system of a motor vehicle, the assembly comprising:

an instrument panel comprising a first plastics material and configured to mount in the passenger compartment of the motor vehicle;

an air bag door panel comprising the first plastics material and formed with the instrument panel as a single integral panel, the door panel being at least partially surrounded by the instrument panel; and

a hinge panel connected to an inside surface of the integral panel in a layered disposition, the hinge panel being insert molded into an inside surface of at least one of the instrument panel and the door panel portions of the integral panel.

3. A cover assembly as defined in claim 2, and characterized by one or more of the following features:

(a) wherein a foam layer is disposed over the integral panel and a plastic skin layer is disposed over the foam layer;

(b) wherein the hinge panel spans a panel juncture zone between the door panel and the instrument panel, and wherein (i) the panel juncture zone optionally includes a styling groove configured to function as a tear seam separating at least a portion of the door panel and the instrument panel, or (ii) the panel juncture zone optionally includes a weakened tear seam separating at least a portion of the door panel and the instrument panel, and the hinge panel preferably includes a hinge panel edge aligned with at least a portion of the tear seam;

(c) wherein the hinge panel comprises a second plastics material, said second plastics material preferably being more ductile and less brittle at low temperatures than the first plastics material;

(d) wherein the hinge panel comprises metal;

(e) wherein the door panel includes a hinge flange extending transversely inward from the inside surface, the hinge flange configured to secure the door panel to a structural member, the hinge panel spanning the hinge flange and door panel in a layered disposition, a portion of the hinge panel being attached to the hinge flange; and

(f) wherein the instrument panel includes a collar extending transversely inward from the inside surface and from around the door panel, the collar defining a door-collar interface along the region where the collar extends from the integral panel; and

(g) wherein the hinge panel spans the door-collar interface, one portion of the hinge panel being attached to the collar and another portion of the hinge panel being attached to the door panel.

4. A cover assembly for concealing an inflatable air bag system of a motor vehicle, the assembly comprising:

an instrument panel comprising a first plastics material and configured to mount in the passenger compartment of the motor vehicle;

an air bag door panel comprising the first plastics material and formed with the instrument panel as a single integral panel, the door panel being at least partially surrounded by the instrument panel; and

a hinge panel connected to an inside surface of the integral panel in a layered disposition, the hinge panel spanning a panel juncture zone between the door panel and the instrument panel.

5. A cover assembly as defined in claim 4, characterized by one or more of the following features: (a) the hinge panel comprises a second plastics material and is attached to the inside surface of the integral panel and is insert-molded into an inside surface of at least one of the instrument panel and the door panel, said second plastics material preferably being more ductile and less brittle at low temperatures than the first plastics material;

(b) wherein at least a portion of the panel juncture zone includes a styling groove;

(c) wherein at least a portion of the panel juncture zone includes a weakened tear seam, and

the hinge panel preferably includes a peripheral hinge panel edge aligned with at least a portion of the tear seam;

(d) wherein the hinge panel comprises metal; and

(e) wherein the instrument panel includes a collar extending transversely inward from the inside surface and from around the door panel defining a door-collar interface; and the hinge panel spans the door-collar interface, a portion of the hinge panel being attached to the collar.

6. A method for making an air bag cover assembly, the assembly including an instrument panel comprising a first plastics material and configured to mount in a motor vehicle passenger compartment, an air bag door panel comprising the first plastics material and formed with the instrument panel as a single integral panel, the door panel being at least partially surrounded by the instrument panel, and a hinge panel connected to an inside surface of the integral panel in a layered disposition, the hinge panel being insert molded into an inside surface of at least one of the instrument panel and the door panel; the method comprising the steps of:

providing a mold having first and second mold portions, the first and second mold portions forming a mold cavity when closed together, the mold cavity having a shape complementing the shape of the integral panel and hinge panel;

forming the hinge panel;

placing the hinge panel in the second mold portion;

closing the mold;

introducing the first plastics material into the mold cavity in molten form;

allowing the molten first plastics material to conform to the shape of the mold cavity and to cure in the mold cavity; and

opening the mold and removing the completed assembly from the mold.

7. The method of claim 6, characterized by one or more of the following features:

(a) wherein the step of forming the hinge panel includes the step of forming a hinge panel comprising a second plastics material, and the step of forming the hinge panel optionally includes the step of providing a second plastic material that is more ductile and less brittle at low temperatures than the first plastics material;

(b) wherein the hinge panel comprises sheet metal;

(c) wherein the step of placing the hinge panel includes the step of placing the hinge plan in the second mold portion in a position spanning a portion of the mold configured to form the panel juncture zone between the instrument panel and door panel portions of the integral panel; and

(d) wherein the step of providing a mold includes the step of shaping the lower surface of the mold cavity to form a hinge-flange that protrudes transversely inward from the door panel portion of the integral panel and in which the step of placing the hinge panel in the second mold portion in a position spanning a portion of the mold configured to form a flange juncture zone between the hinge-flange and the door panel.

8. A vehicle passenger compartment console assembly comprising:

a console body having an outer shell;

an access opening disposed in the console body outer shell;

a positioning apparatus movably supported within the console body outer shell;

at least two storage modules disposed within the shell and movably supported on the positioning apparatus; the storage modules sequentially

movable between one or more concealed positions displaced from the access opening and a displayed position adjacent the access opening; the positioning apparatus configured to support any one of the storage modules in the display position while simultaneously supporting at least one of the other storage modules in a concealed position to allow a passenger compartment occupant to gain physical access to a module and its contents through the access opening while leaving other modules concealed within the shell.

9. An automotive passenger compartment console assembly as defined in claim 8, characterized by one or more of the following features:

(a) wherein the positioning apparatus comprises an electro-mechanical occupant-actuated drive mechanism;

(b) wherein the positioning apparatus comprises an occupant-actuated automatic module selection system;

(c) wherein the modules are sequentially moveable through the displayed position;

(d) wherein the positioning apparatus comprises a carrousel supported for rotation about a carrousel axis; wherein the positioning apparatus preferably comprises a drum-type carrousel supported for rotation about a generally horizontal axis;

(e) further including an access door movably supported across the module access opening, the door shaped to cover the access opening in a closed position and movable to an open position uncovering the access opening;

(f) wherein at least one of the modules comprises an appliance that is incorporated into the design of the module;

(g) wherein at least one of the modules comprises a storage space;

(h) wherein the console body is a floor console body supported on a floor of an automobile between a front driver's seat and a front passenger seat of the automobile;

(i) further including a forward image display panel supported in a forward end of the console body;

(j) further including an aft image display panel supported in an aft end of the console body and image-producing electronic circuitry connected to the aft display panel, and optionally including at least one remote-control unit communicable with the electronic image-producing circuitry;

(k) wherein the console body is an instrument panel console body supported in an instrument panel assembly of the automobile, wherein the positioning apparatus preferably comprises (i) a drum-type carrousel supported in the instrument panel console body for rotation about a generally vertical axis or (ii) a drum-type carrousel supported in the instrument panel console body for rotation about a generally horizontal axis, wherein the carrousel preferably is at least partially housed within a central stack portion of the instrument panel assembly, and (iii) wherein the carrousel preferably is rotatable to a closed position and in which the carrousel includes a face panel disposed across the access opening in the closed position.

10. A vehicle passenger compartment console assembly comprising:

a console body having an outer shell;

an access opening disposed in the console body outer shell; and

a positioning apparatus movably supported within the console body outer shell, the positioning apparatus including a platform having at least two storage regions, the platform being rotatably supported within the console body outer shell, the positioning apparatus configured to rotate the platform and move a selected one of the storage regions to a display position adjacent the access opening while simultaneously moving the other of the storage regions into a remote position displayed from the access opening.

11. An automotive passenger compartment console assembly as defined in claim 10, characterized by one or more of the following features:

(a) wherein the positioning apparatus comprises an electro-mechanical occupant-actuated drive mechanism;

(b) wherein the positioning apparatus comprises an occupant-actuated automatic module selection system;

(c) further including an access door movably supported across the module access opening, the door shaped to cover the access opening in a closed position and movable to an open position uncovering the access opening;

(d) further including an appliance attached to the platform in one of the storage regions; and

(e) wherein at least one of the storage regions comprises a storage space.

12. A headliner assembly for lining the roof of the passenger compartment of a vehicle, the headliner assembly comprising:

a substrate configured to be mounted to a vehicle in a position generally covering a lower surface of a passenger compartment roof, the substrate comprising an upper substrate surface and a lower substrate surface disposed opposite the upper substrate surface, the substrate comprising a moldable material; and

a cavity formed into the substrate between the upper substrate surface and the lower substrate surface to distribute air in the passenger compartment or to support electrical wiring, foam and the like.

13. A headliner assembly as defined in claim 12, characterized by one or more of the following features:

(a) wherein the cavity comprises an air duct and in which the headliner includes:

an air inlet opening positioned to receive air from a vehicle air handling system, and optionally including a directional air outlet register disposed in the air outlet opening;

an air outlet opening spaced from the air inlet opening and disposed in an underside surface of the headliner assembly to direct air from the vehicle air handling system into the passenger compartment;

the air duct extending between and connecting the air inlet opening and the air outlet opening to provide gaseous communication between the air inlet opening and the air outlet opening;

(b) wherein an elongated conduit defines the cavity, the conduit including:

a cable inlet opening positioned to receive electrical or fiber optic cabling into the conduit from a vehicle electrical or fiber optic system; and

a cable outlet opening spaced from the cable inlet opening and disposed adjacent a fixture supported on the headliner assembly to allow the cabling to be connected to the fixture, the cable conduit extending between and connecting the cable inlet opening and the cable outlet opening;

(c) further comprising foam disposed within the cavity, said foam preferably comprising an energy absorbing foam or an acoustic energy-absorbing foam;

(d) wherein the cavity includes an inner wall that envelops foam disposed within the cavity;

(e) comprising a plurality of foam-filled cavities disposed in an array at spaced locations;

(f) wherein the cavity is integrally formed in the substrate;

(g) wherein a decorative cover is disposed on a lower surface of the substrate; and

(h) further including a foam layer disposed on a lower surface of the substrate; and a decorative cover optionally is disposed on a lower surface of the foam layer.

14. A method for making a headliner comprising a substrate configured to be mounted to a vehicle in a position generally covering a lower

surface of a passenger compartment roof, the substrate comprising an upper substrate surface and a lower substrate surface disposed opposite the upper substrate surface, the substrate comprising a moldable material, a cavity formed into the substrate between the upper substrate surface and the lower substrate surface; the method including the steps of:

providing a blow mold having a contoured portion shaped to complement the desired exterior contours of the headliner substrate to be formed, the contoured portion including an enlarged region corresponding to a desired cavity position in the substrate to be formed;

providing a molten parison in the hollow portion of the blow mold;

expanding the molten parison into conforming contact with the contoured portion of the blow mold by injecting gas into the molten parison;

allowing the molten parison to harden into the headliner substrate; and

removing the headliner substrate from the blow mold.

15. The method of claim 14, characterized by one or more of the following features:

(a) the step of providing a molten parison includes the step (i) of providing the molten parison between open halves of a two-piece blow mold; and

including the additional step (ii) of closing the two blow mold halves together around the molten parison before the step of fully expanding the molten parison;

(b) the additional steps of providing a layer of foam on a lower surface of the substrate and providing a layer of cover material on a lower surface of the foam;

(c) the additional step of providing foam within the cavity, wherein the step of providing foam preferably includes the steps of:

(i) inserting one end of a nozzle into the cavity;

(ii) injecting foam into the cavity through the nozzle; and

(iii) withdrawing the nozzle from the cavity;

(d) the step of providing a molten parison includes the step of extruding the molten parison; and

(e) the step of expanding the molten parison includes the additional steps of:

(i) inserting a blow pin into the molten parison;

(ii) injecting the gas into the parison through the blow pin; and

(iii) removing the blow pin from the parison.

16. A method of forming a cover assembly for concealing an inflatable air bag system of a motor vehicle, the method comprising the steps of:

forming an interior trim panel from a first plastics material, the interior trim panel having a seam at least partially defining an air bag deployment door in the panel, the first plastics material being flexible in a limited temperature range and forming an integral primary hinge about which the door of the panel may swing outwardly from the panel upon separation of a tear seam portion of the seam and outward deployment of an air bag of the supplemental passenger restraining system, the primary hinge further acting as a primary tether to retain the door of the panel within the limited temperature range but having a potentially frangible portion subject to breakage at temperatures below the limited temperature range;

forming a supplemental tethering hinge separately from the panel from a second plastics material that is relatively more flexible than the first plastics material at temperatures below the limited temperature range;

placing the supplemental tethering hinge in a position spanning the potentially frangible portion of the primary hinge with opposite margins of the supplemental tethering hinge disposed against the panel on opposite sides of the potentially frangible portion;

heating the panel and supplemental tethering hinge at their interfaces sufficiently to locally remelt the first and second plastics materials and thereby weld the supplemental tethering hinge to the panel across the potentially frangible portion of the primary hinge; and

installing the panel and supplemental tethering hinge assembly on the vehicle structure with the door of the panel arranged in overlying covering relation to the air bag restraining system.

17. The method as set forth in claim 16, and characterized by one or more of the following features:

(a) the supplemental tethering hinge is ultrasonically welded to the panel;

(b) the supplemental tethering hinge is vibration welded to the panel;

(c) the supplemental tethering hinge is induction welded to the panel;

(d) the supplemental tethering hinge is hot plate conduction welded to the panel;

(e) the supplemental tethering hinge is electromechanically welded to the panel;

(f) the supplemental tethering hinge is radio frequency welded to the panel;

(g) the door portion of the supplemental tethering hinge is formed to have the same general size and shape as that of the door of the panel and is positioned to cover substantially the entire inner surface of the door.

18. A process of forming a cover assembly for concealing an inflatable air bag system of a motor vehicle, the method comprising the steps of:

forming an interior trim panel from a first plastics material, the interior trim panel having a seam at least partially defining an air bag deployment

door in the panel, the first plastics material being flexible in a limited temperature range and forming an integral primary hinge about which the door of the panel may swing outwardly from the panel upon separation of a tear seam portion of the seam and outward deployment of an air bag of the supplemental passenger restraining system, the primary hinge further acting as a primary tether to retain the door of the panel within the limited temperature range but having a potentially frangible portion subject to breakage at temperatures below the limited temperature range;

forming a supplemental tethering hinge separately from the panel from a second plastics material that is relatively more flexible than the first plastics material at temperatures below the limited temperature range;

securing the supplemental tethering hinge to the panel such that an intermediate portion of the supplemental tethering hinge spans the potentially frangible portion of the primary hinge; and

installing the panel and supplemental tethering hinge assemblage on the vehicle structure with the door of the panel arranged in overlying relation to the air bag restraining system.

19. The method set forth in claim 18, and characterized by one or both of the following features:

(a) the supplemental tethering hinge is secured to the panel at least in part by an adhesive; and,

(b) the supplemental tethering hinge is formed of a second plastics material and is secured to the panel at least in part by welding.

20. An inflatable restraint assembly comprising a trim panel, an air bag door positioned spanning an air bag deployment opening in the trim panel, a frangible tear seam defining at least a portion of the air bag door, and a hard plastic collar is attached to the trim panel, wherein the air bag door is integrally formed with the hard plastic collar.

21. The inflatable restraint assembly according to claim 20, and characterized by one or more of the following features:

(a) the air bag door is integrally formed with the hard plastic collar as a single unitary panel;

(b) the integral air bag door and hard plastic collar comprise a material that is ductile at low temperatures;

(c) also including a layer of foam covering the unitary panel, said layer of foam optionally including a skin or cover material disposed thereon;

(d) a plurality of mechanical fasteners for fastening the collar portion of the unitary pattern to a retainer portion of the assembly;

(e) further comprising a plurality of heat stake bosses or pop rivets for fastening the collar portion of the panel to the retainer;

(f) the air bag door includes a weakened area which helps to confine tearing and/or breakage to a tear seam;

(g) the air bag door includes an integral hinge region; and

(h) the air bag door includes a ridge which extends outwardly from the outer surface of the collar.

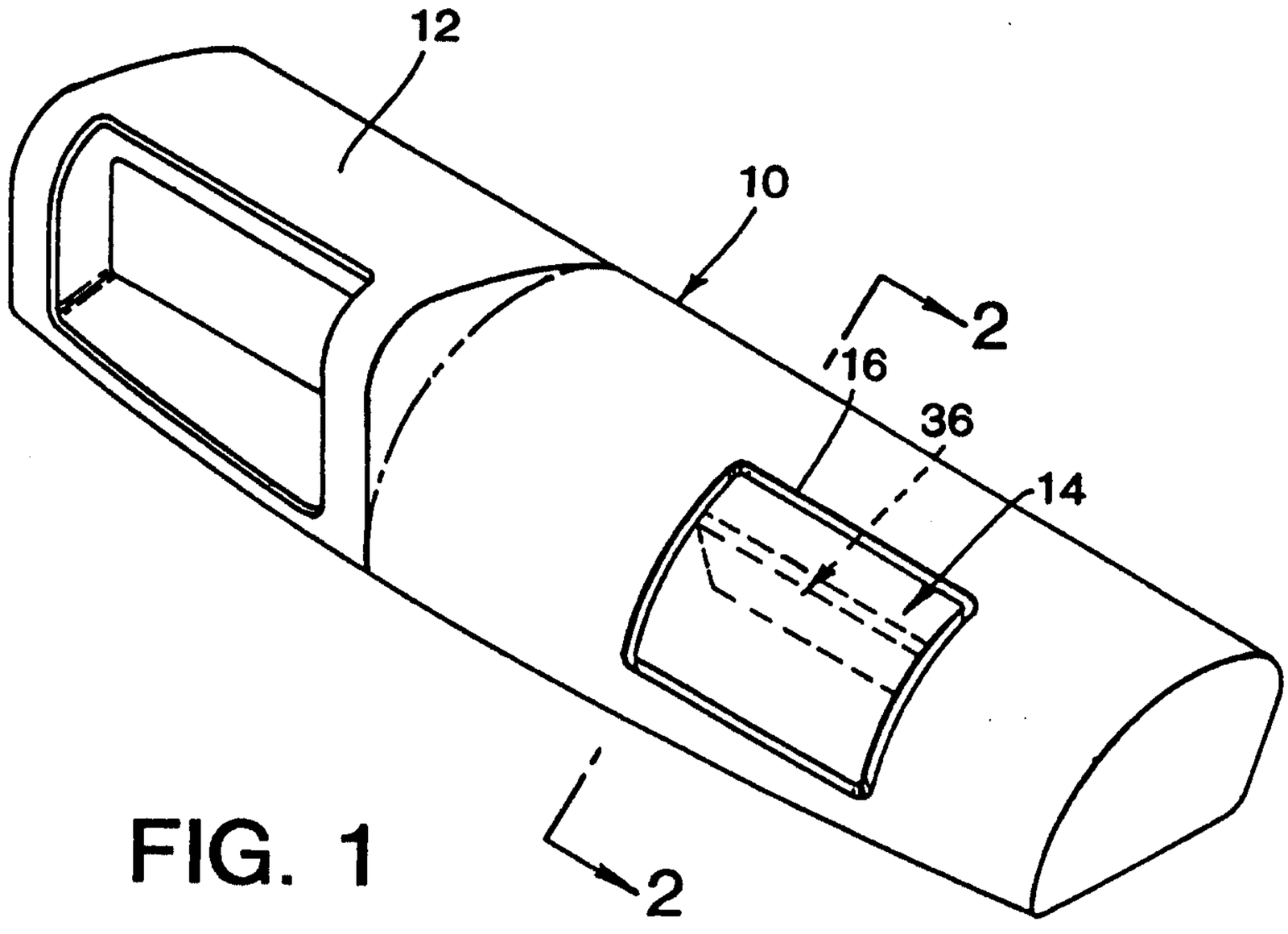
12
10
2
16
36
14
2

FIG. 1

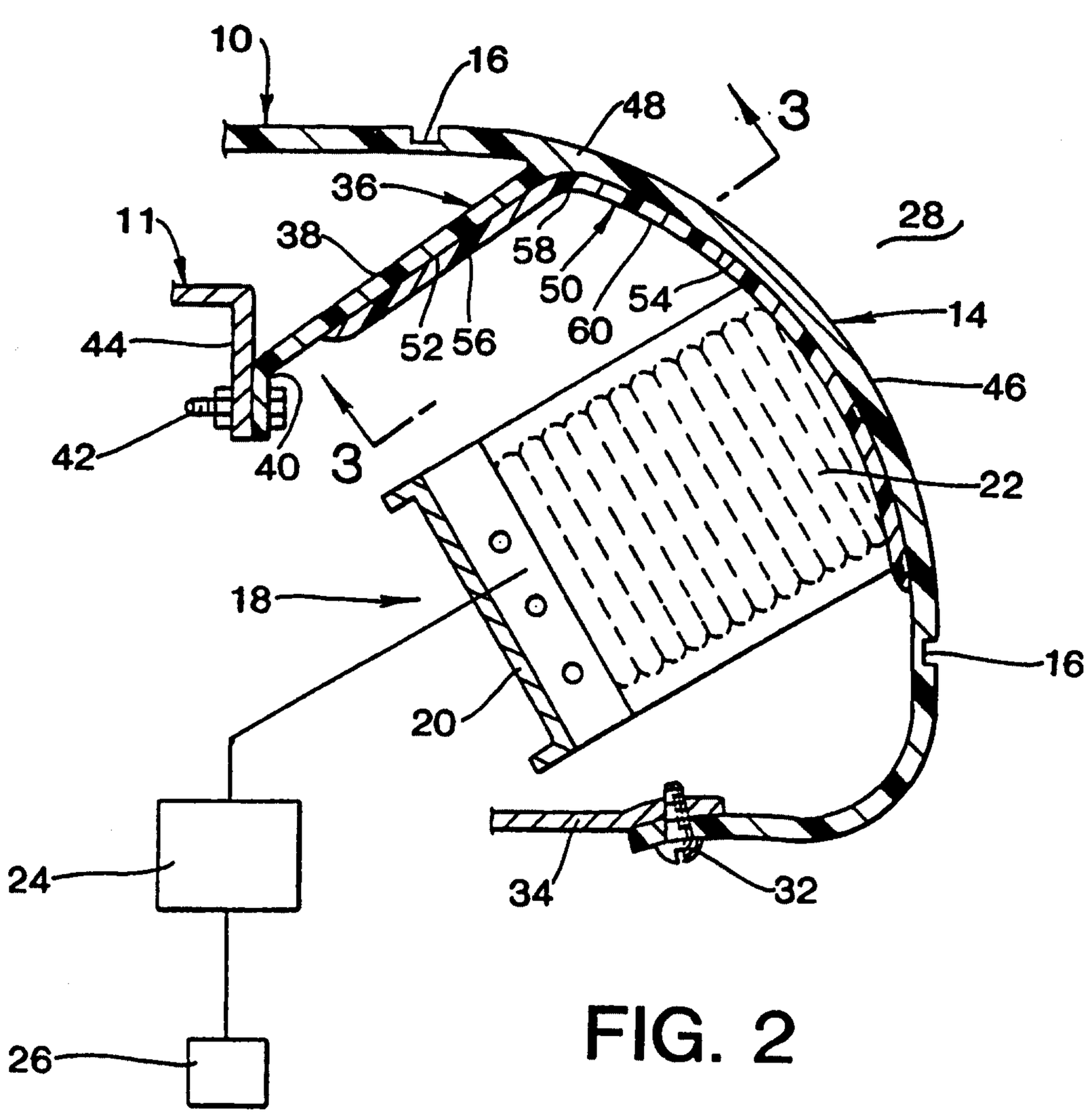
10
16
48
3
36
28
11
38
58
50
54
14
44
52
56
60
46
42
40
3
22
18
16
20
24
26
34
32

FIG. 2

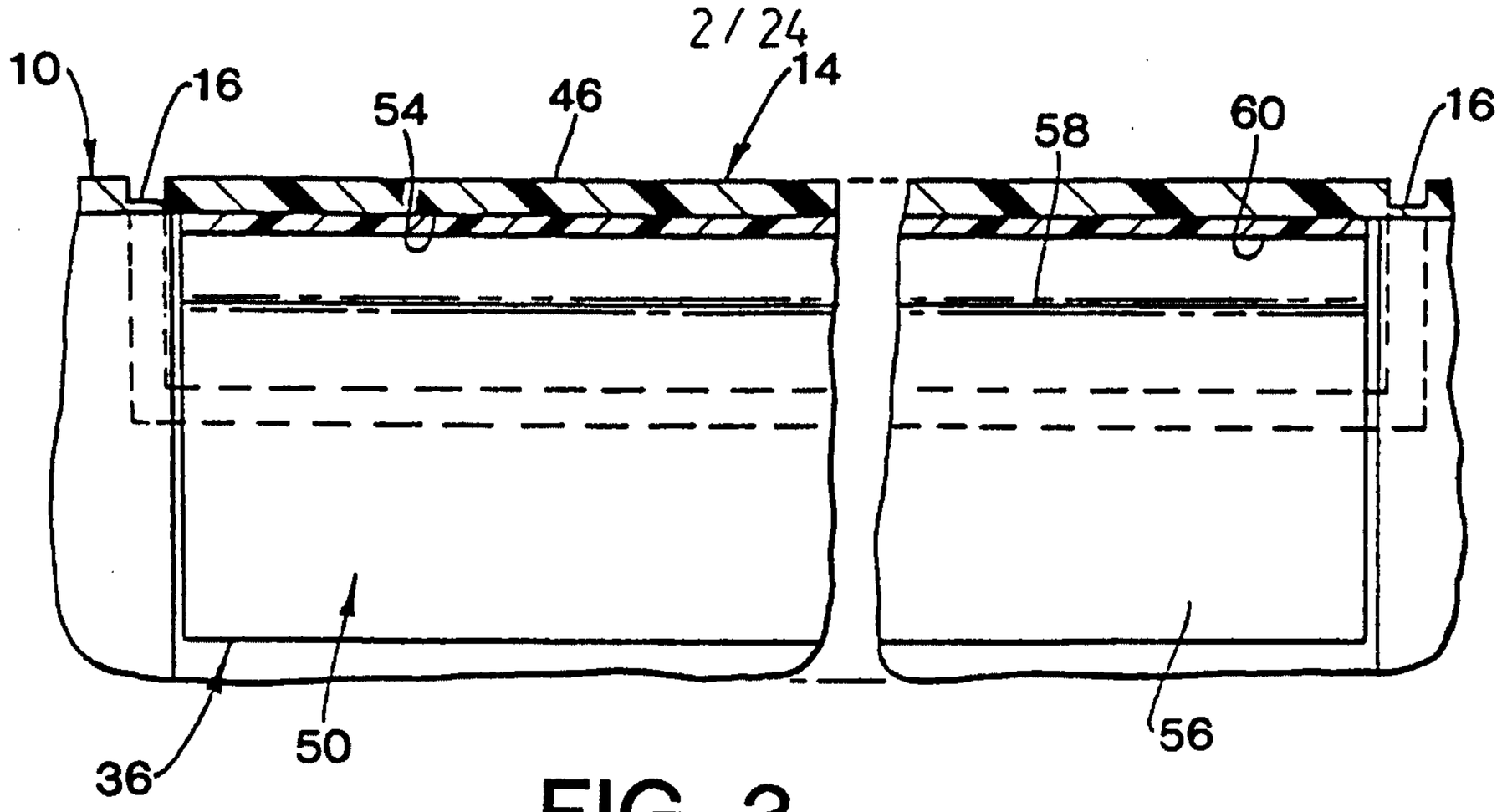
10
16
54
46
14
58
60
16
36
50
56

FIG. 3

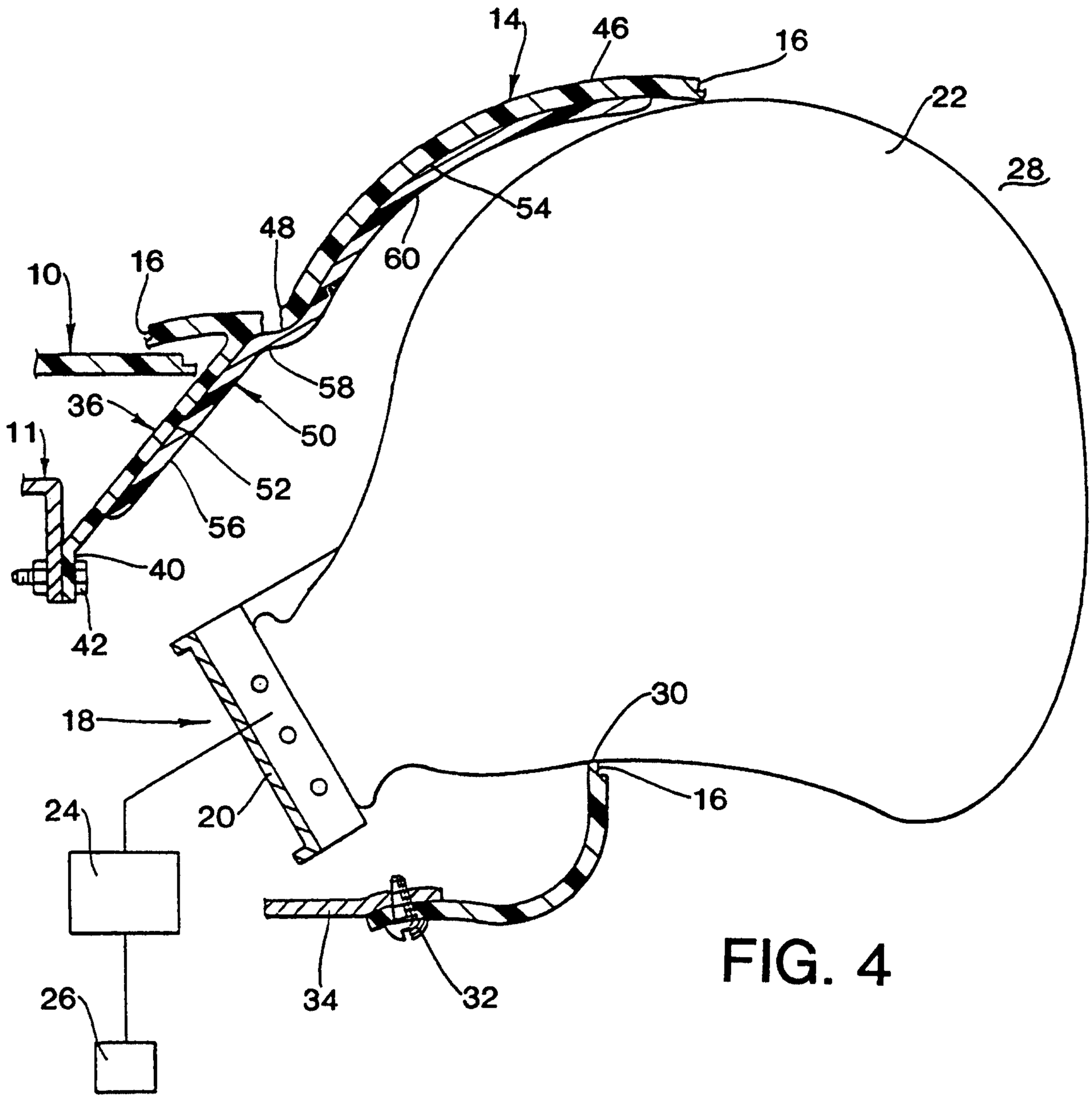
14
46
16
22
28
54
48
60
10
16
58
36
50
11
52
56
40
42
18
20
24
26
30
16
34
32

FIG. 4

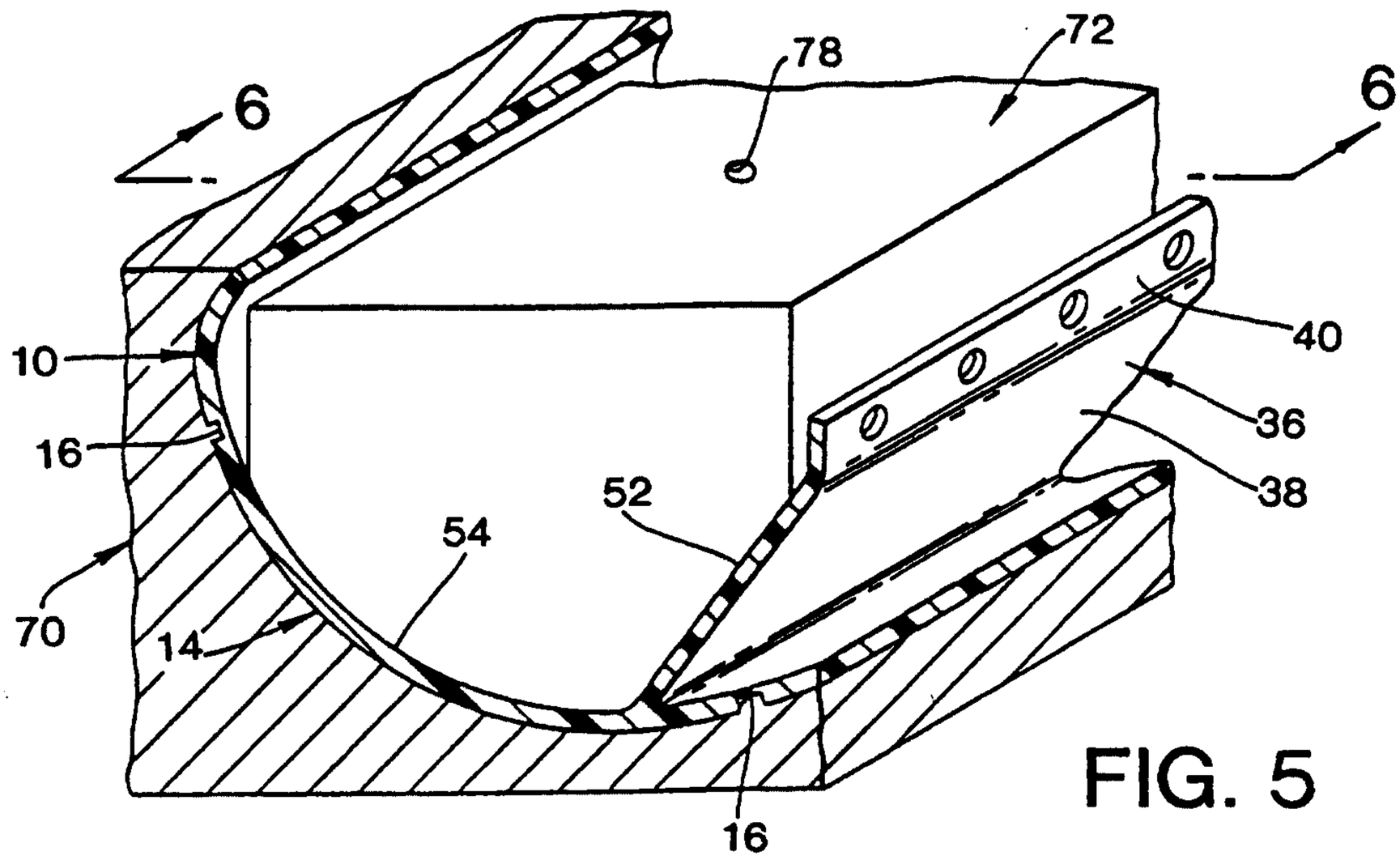

FIG. 5

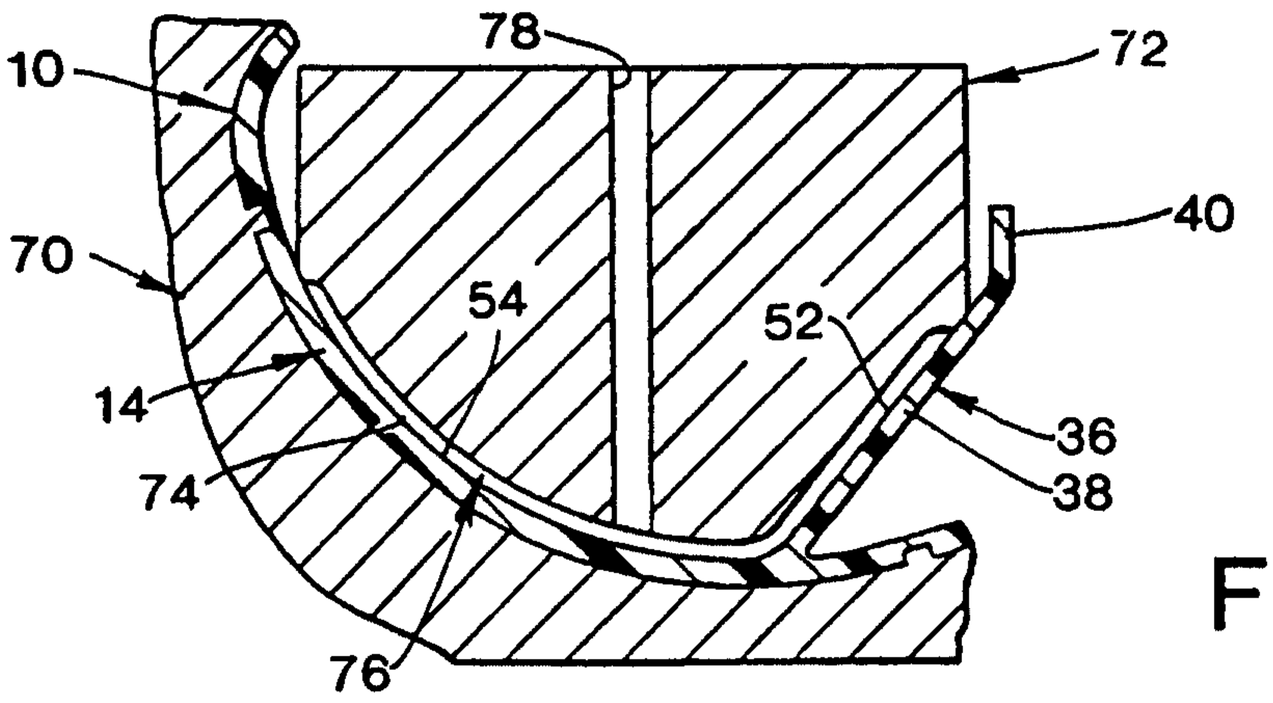

FIG. 6

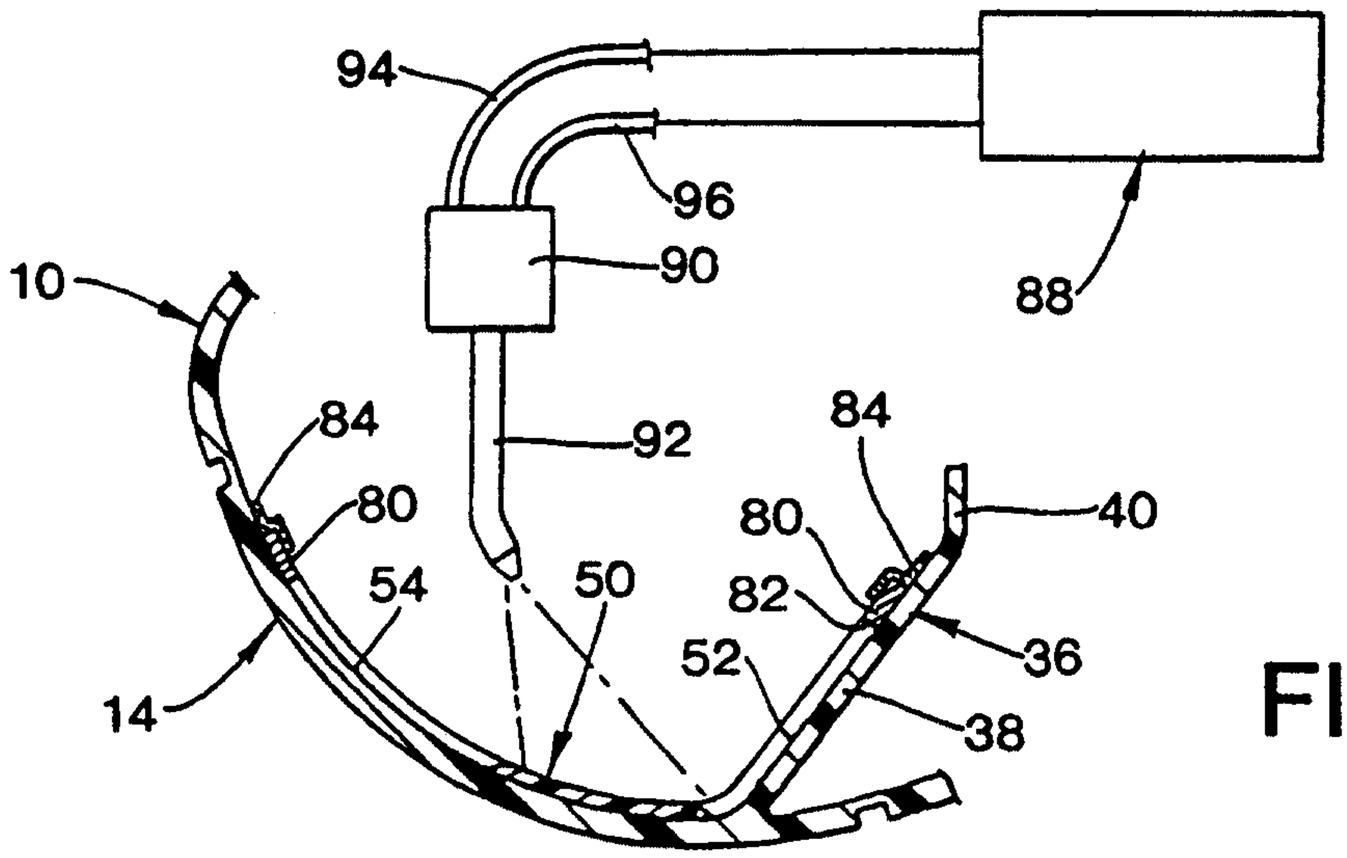

FIG. 7

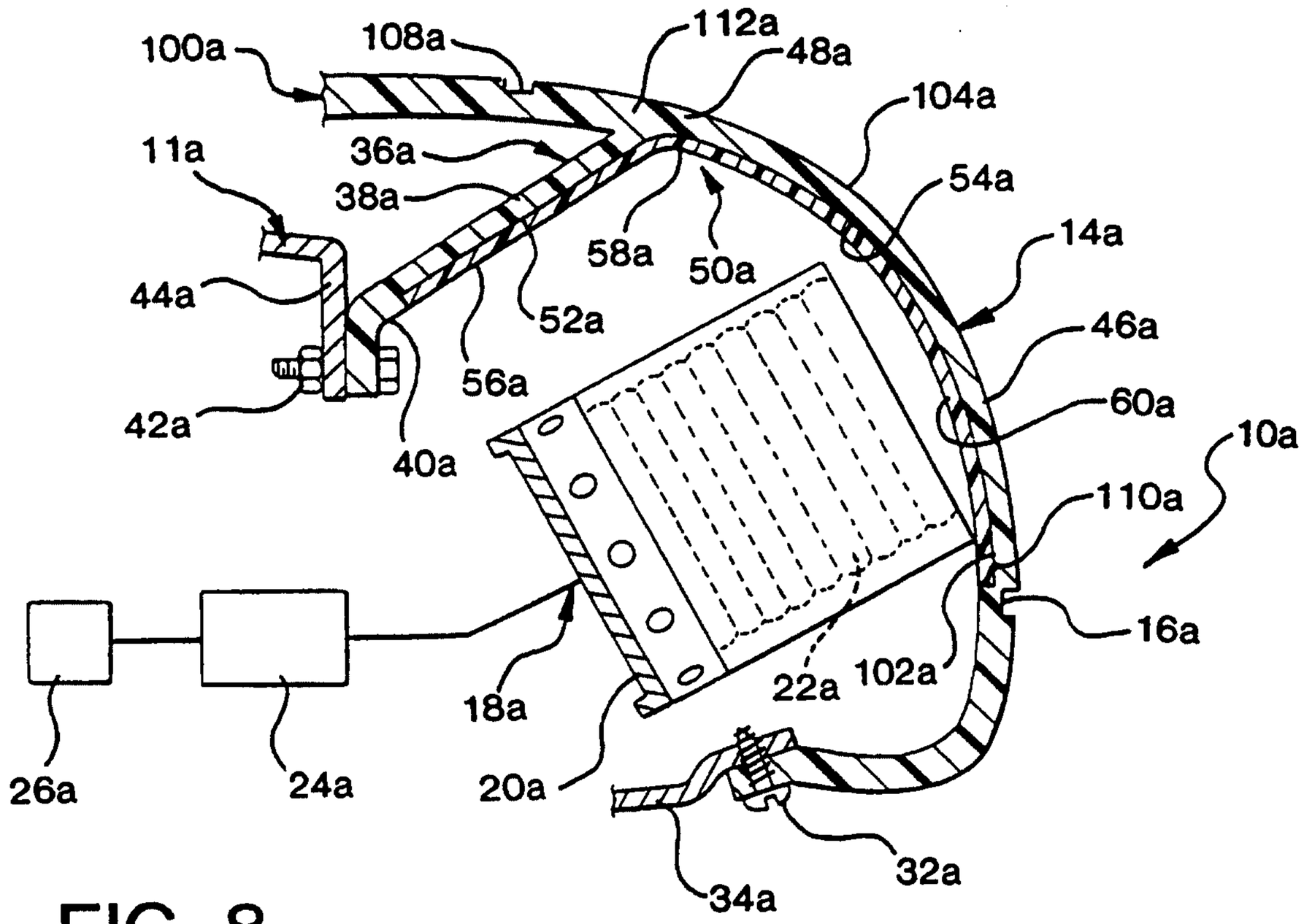
100a
108a
112a
48a
104a
11a
36a
38a
54a
14a
58a
50a
44a
52a
46a
56a
60a
42a
40a
10a
110a
16a
18a
22a
102a
26a
24a
20a
32a
34a

FIG. 8

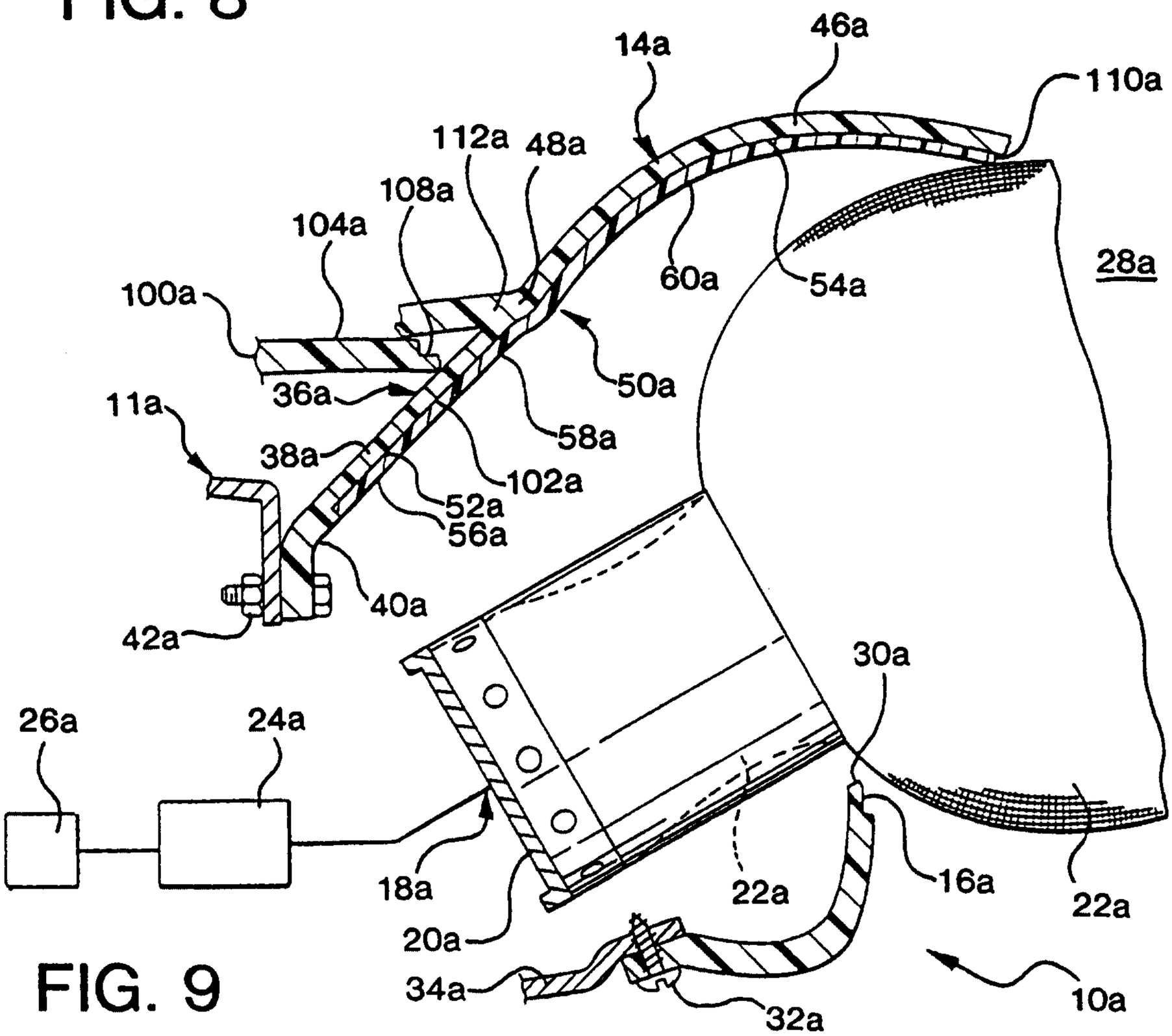
14a
46a
110a
112a
48a
108a
104a
60a
54a
28a
100a
50a
36a
11a
58a
38a
102a
52a
56a
40a
42a
30a
26a
24a
18a
22a
16a
22a
20a
34a
32a
10a

FIG. 9

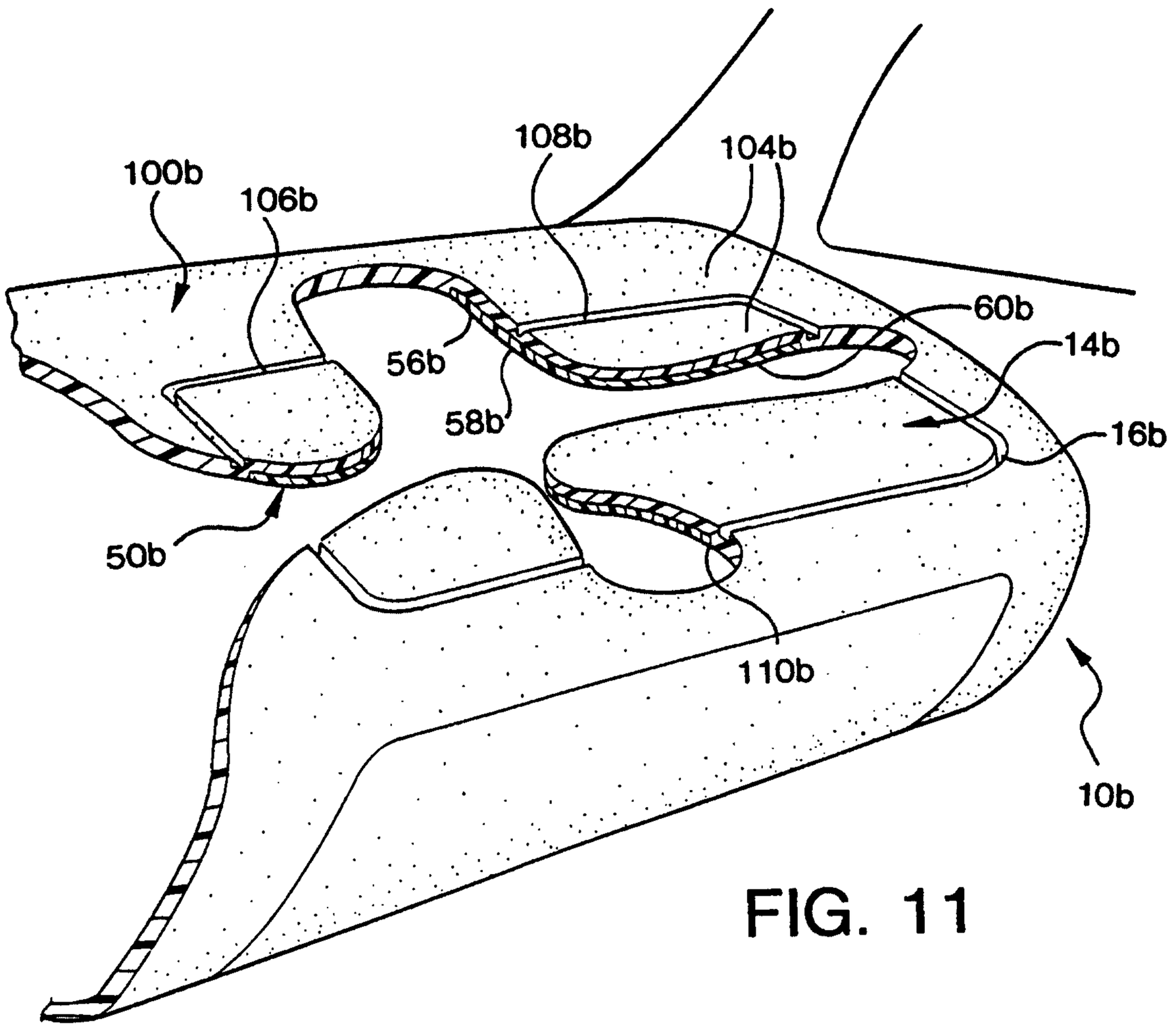
100b
106b
108b
104b
60b
14b
56b
58b
16b
50b
110b
10b

FIG. 11

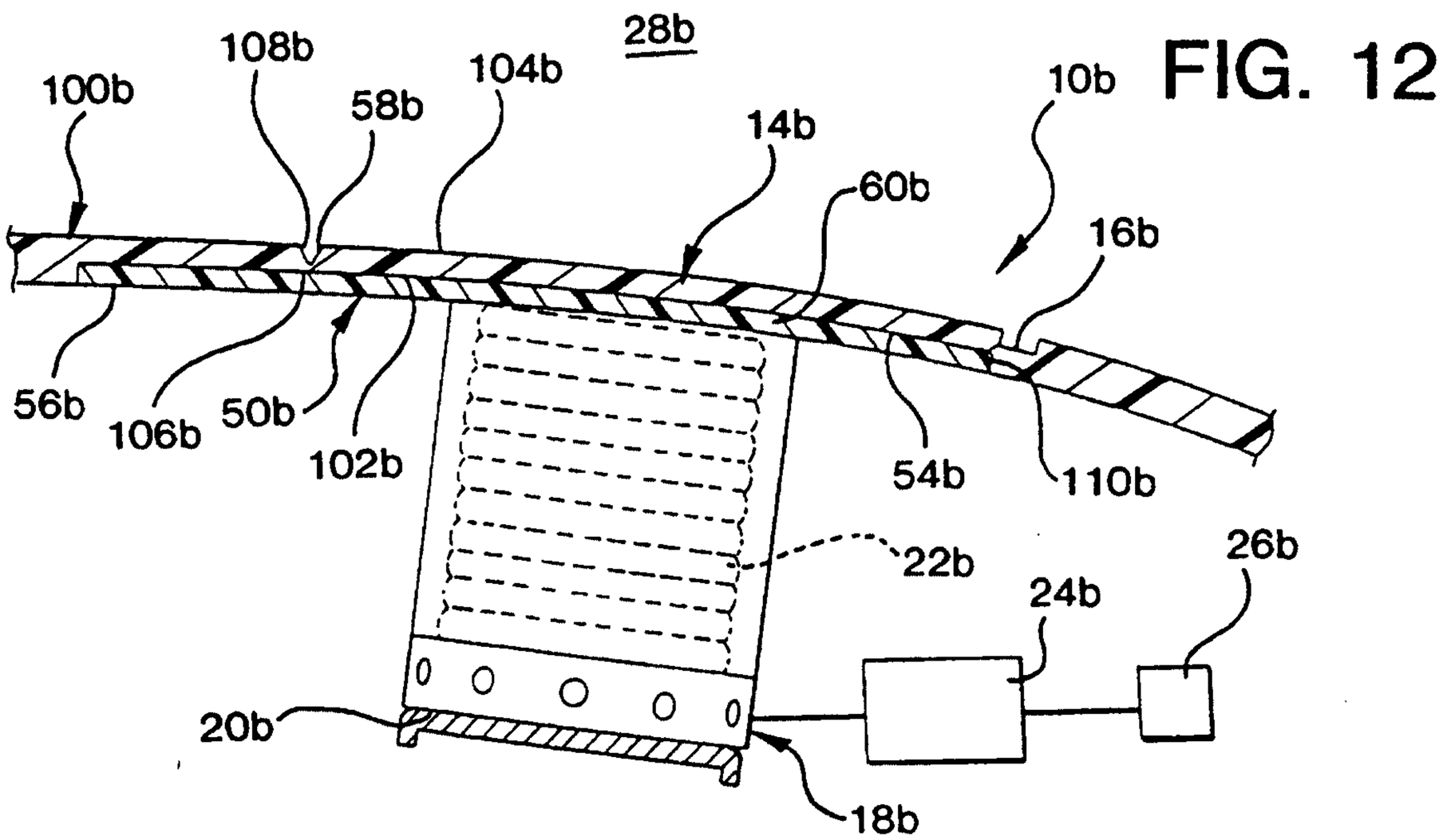
28b
100b
108b
58b
104b
14b
10b
60b
16b
56b
106b
50b
102b
54b
110b
22b
26b
24b
20b
18b

FIG. 12

FIG. 10

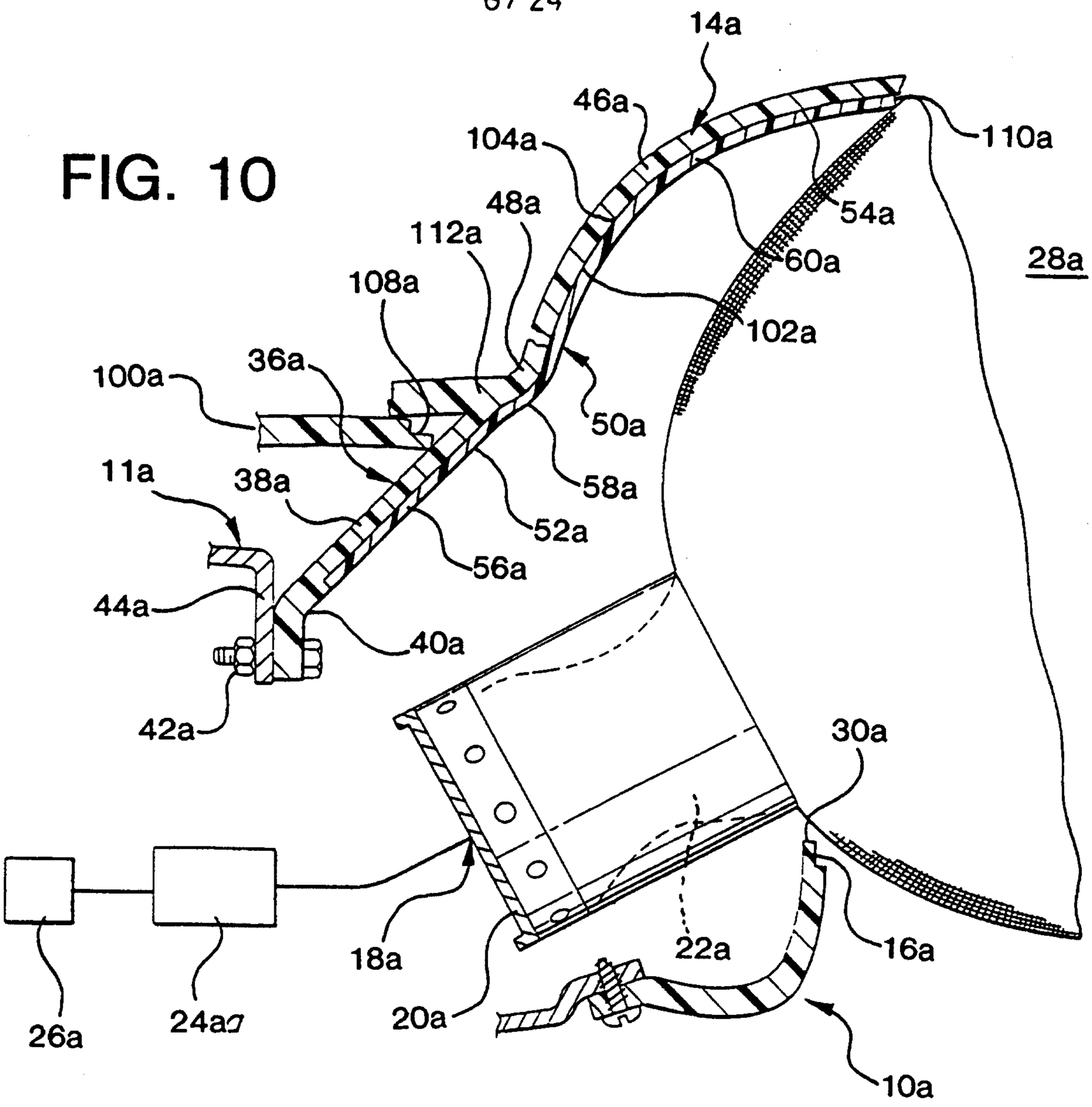
14a
46a
104a
110a
48a
54a
112a
60a
28a
108a
102a
36a
100a
50a
58a
11a
38a
52a
56a
44a
40a
42a
30a
18a
22a
16a
20a
26a
24a
10a

FIG. 14

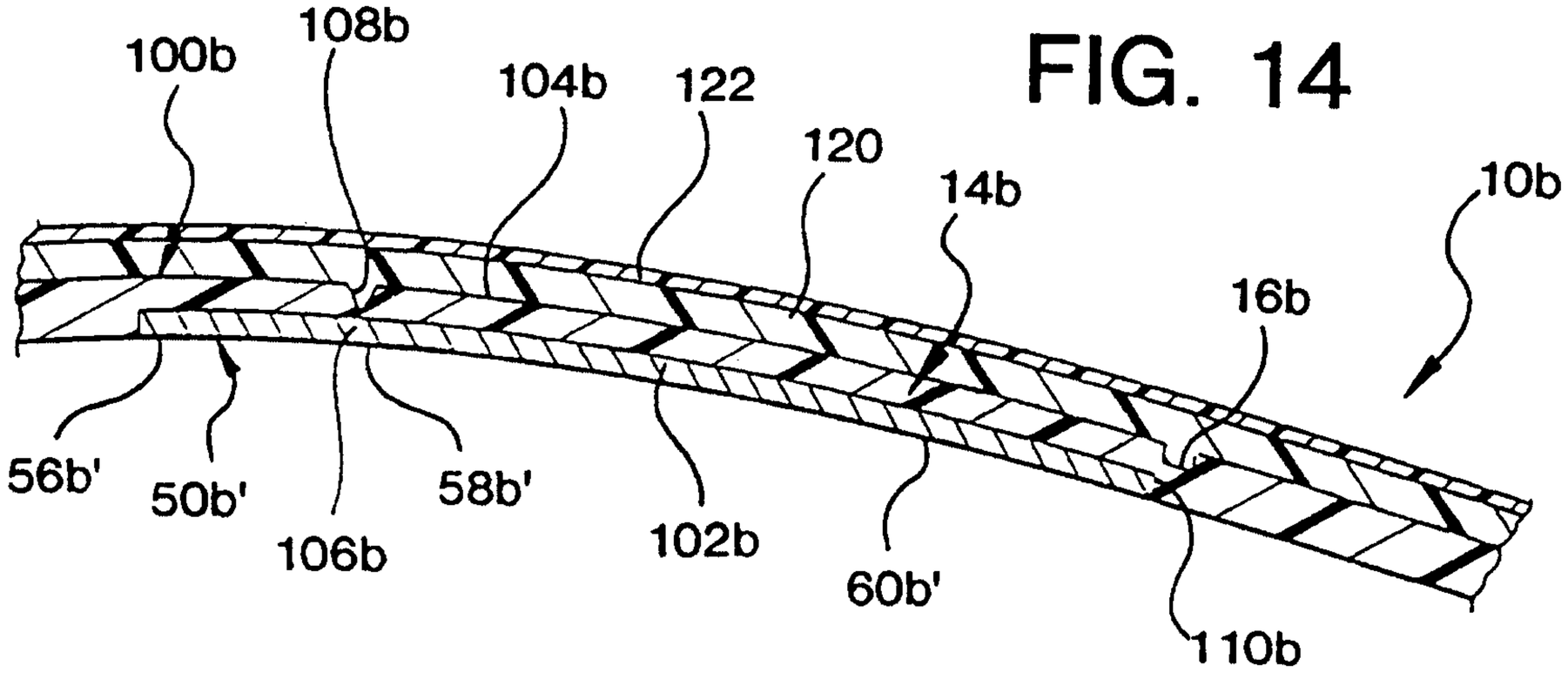
100b
108b
104b
122
120
14b
10b
16b
56b'
50b'
58b'
106b
102b
60b'
110b

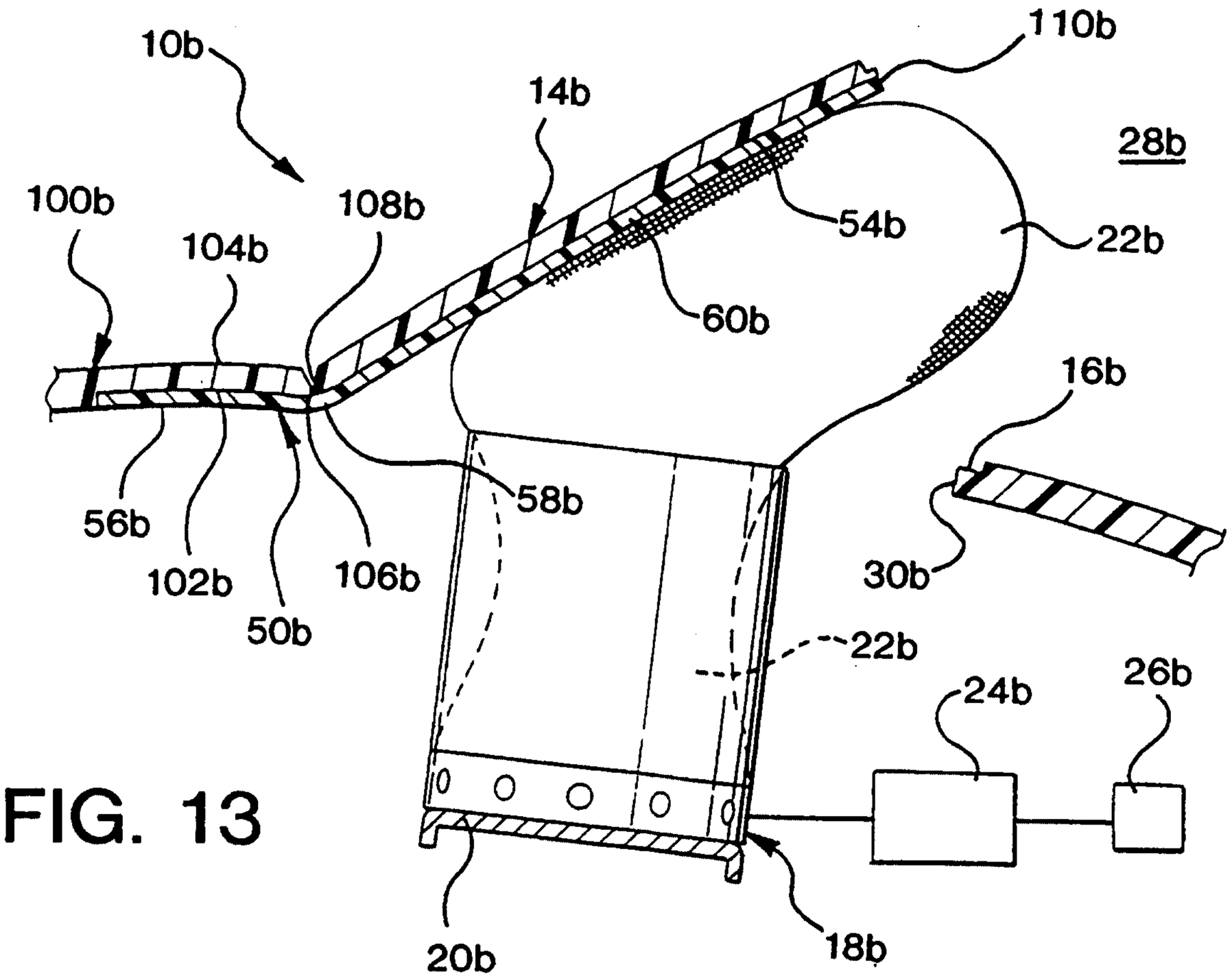
10b
110b
14b
28b
100b
108b
104b
54b
22b
60b
16b
58b
56b
102b
106b
50b
30b
22b
24b
26b
20b
18b

FIG. 13

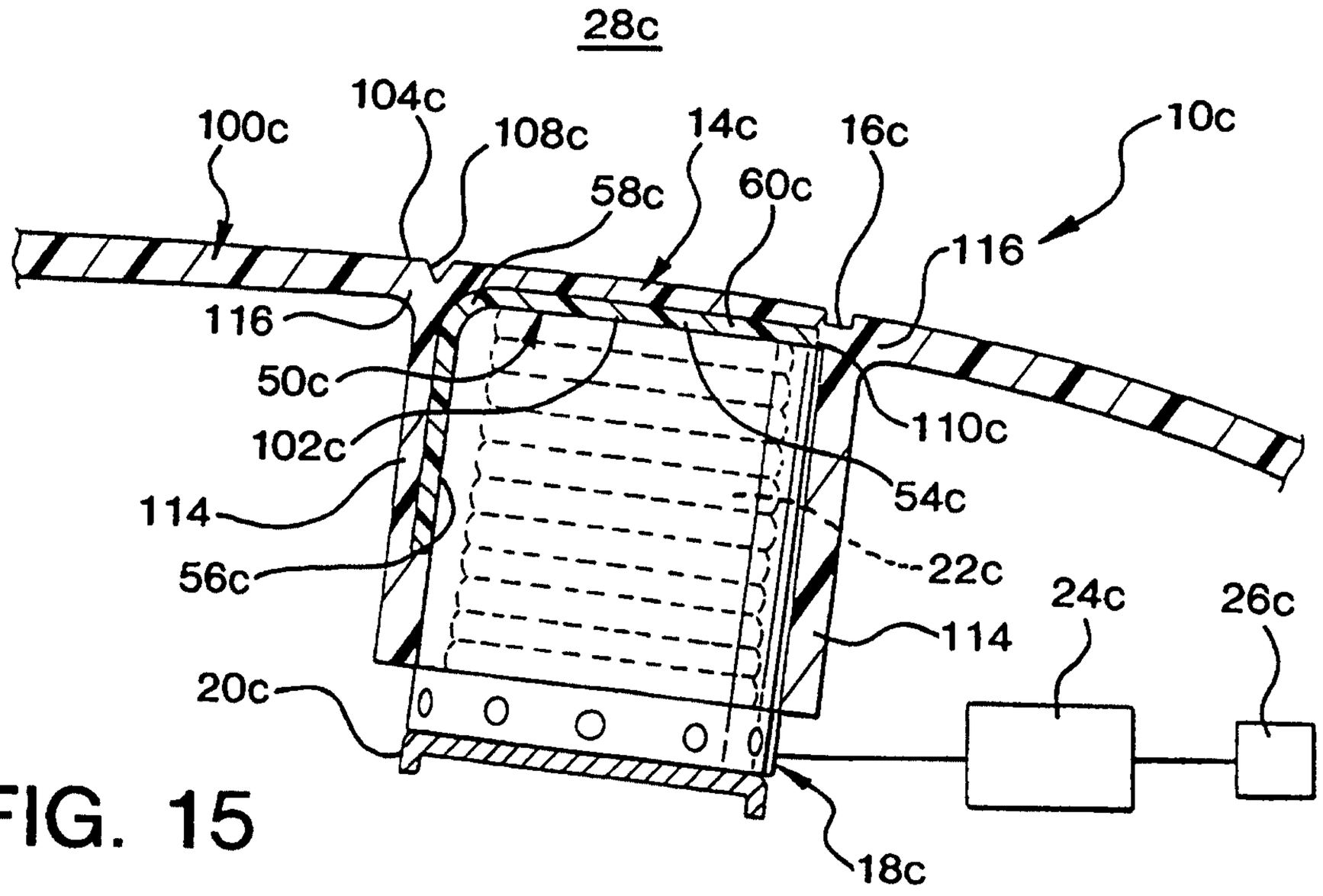
28c
104c
100c
108c
14c
16c
10c
58c
60c
116
116
50c
110c
102c
54c
114
22c
56c
24c
26c
114
20c
18c

FIG. 15

FIG. 16

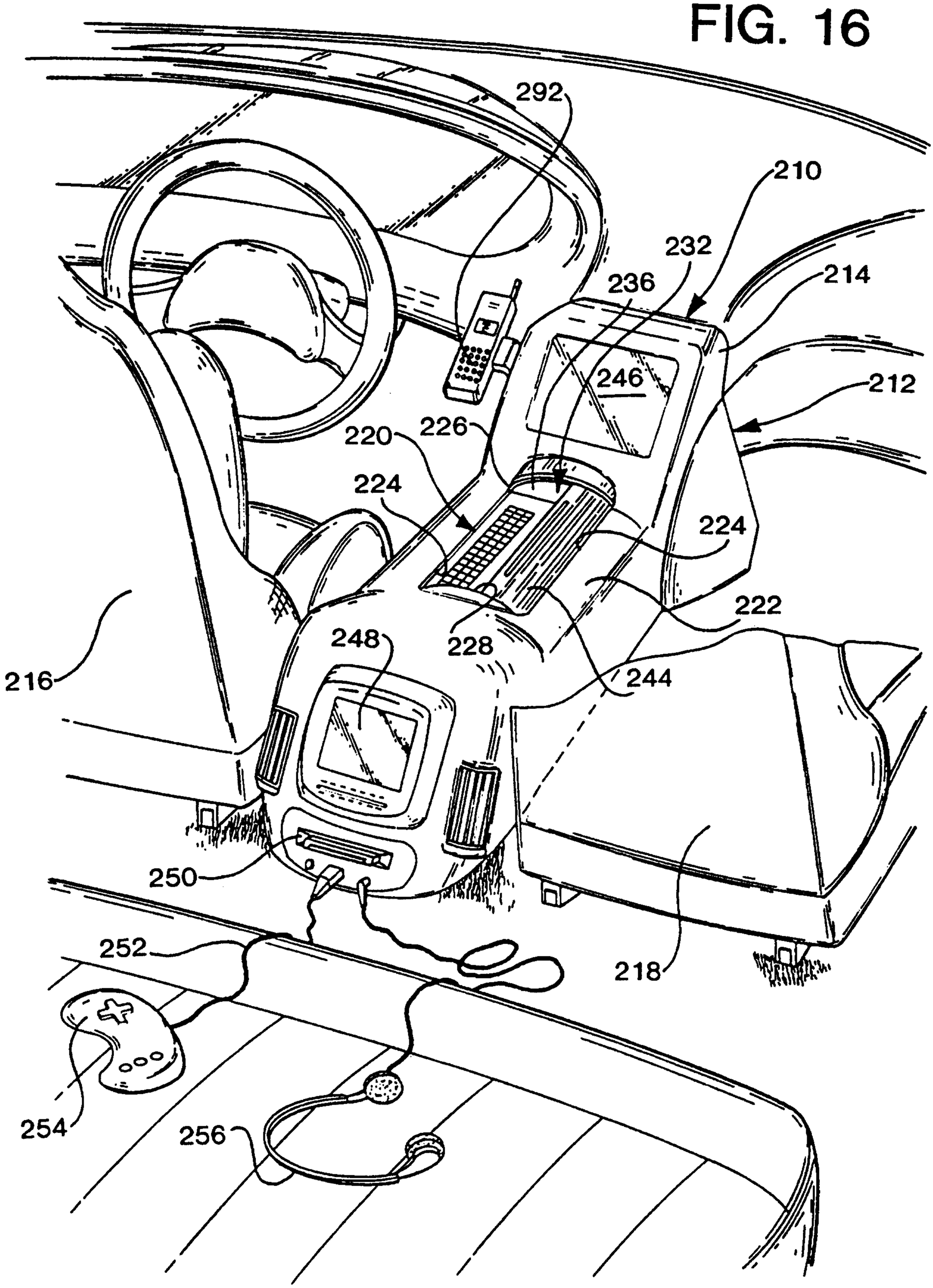
292
210
232
236
214
246
212
220
226
224
224
222
248
228
244
216
250
252
218
254
256

FIG. 17

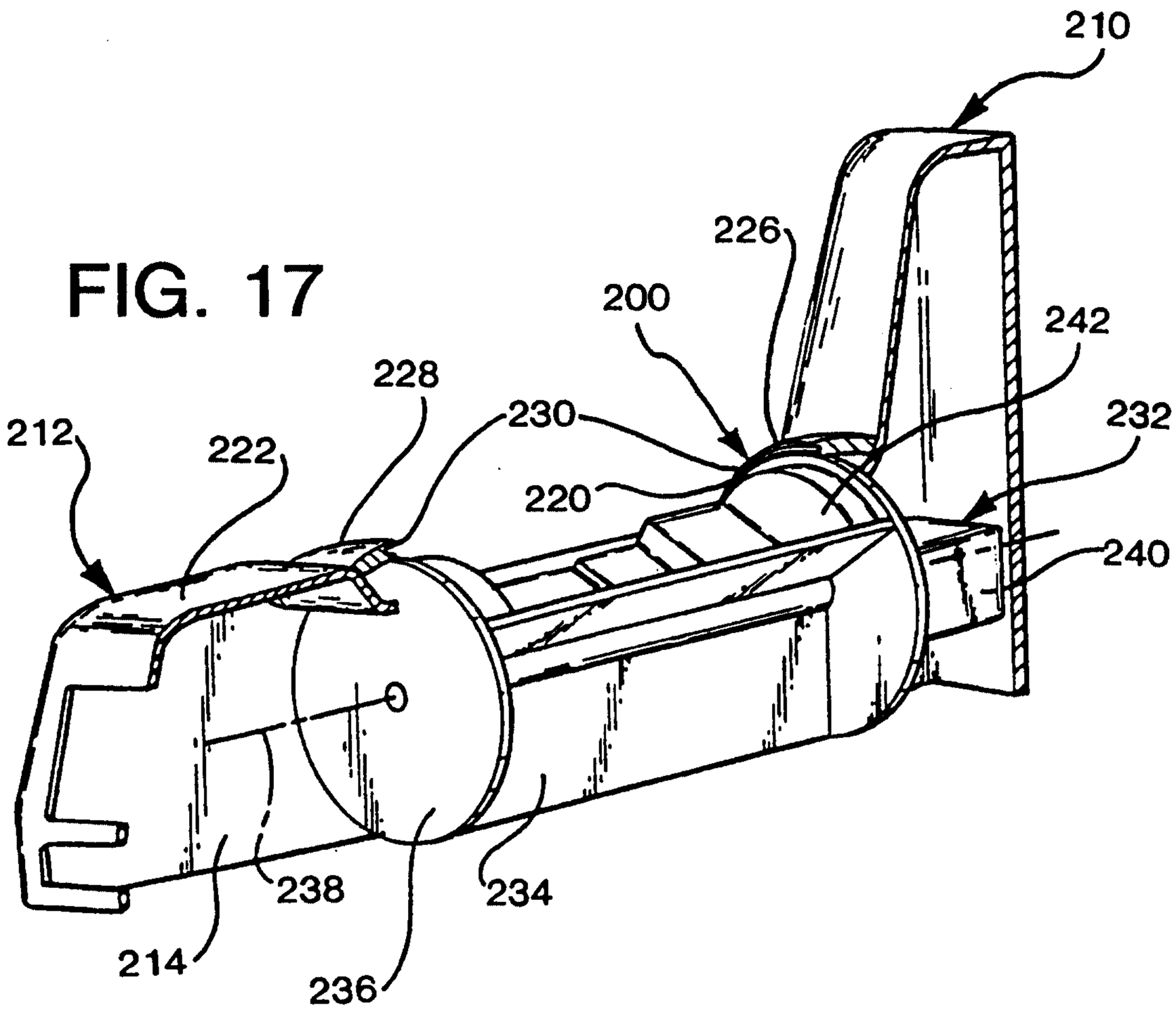

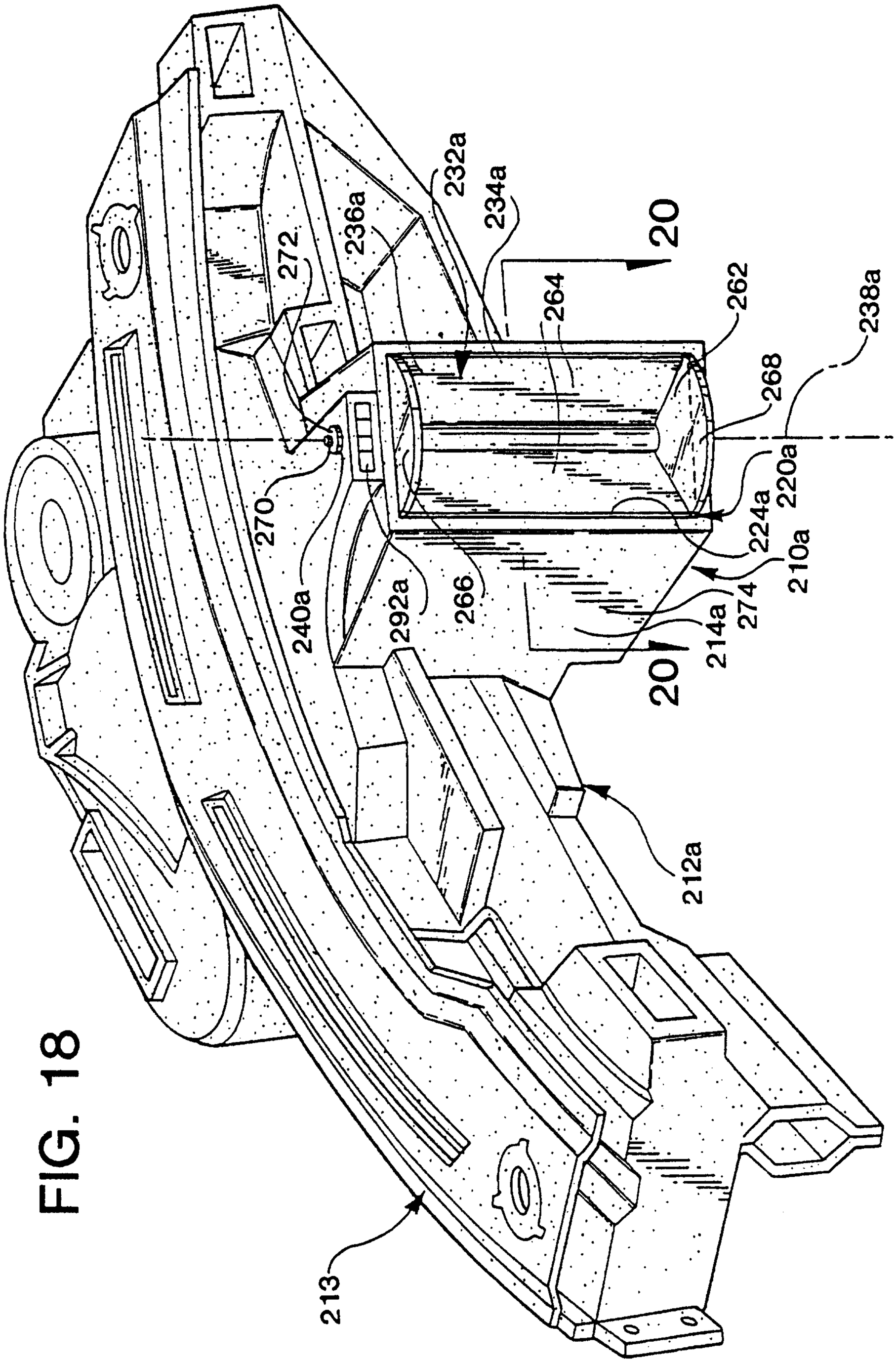
232a
234a
20
272
236a
264
262
238a
268
270
220a
224a
240a
210a
292a
266
214a
274
20
212a
213

FIG. 18

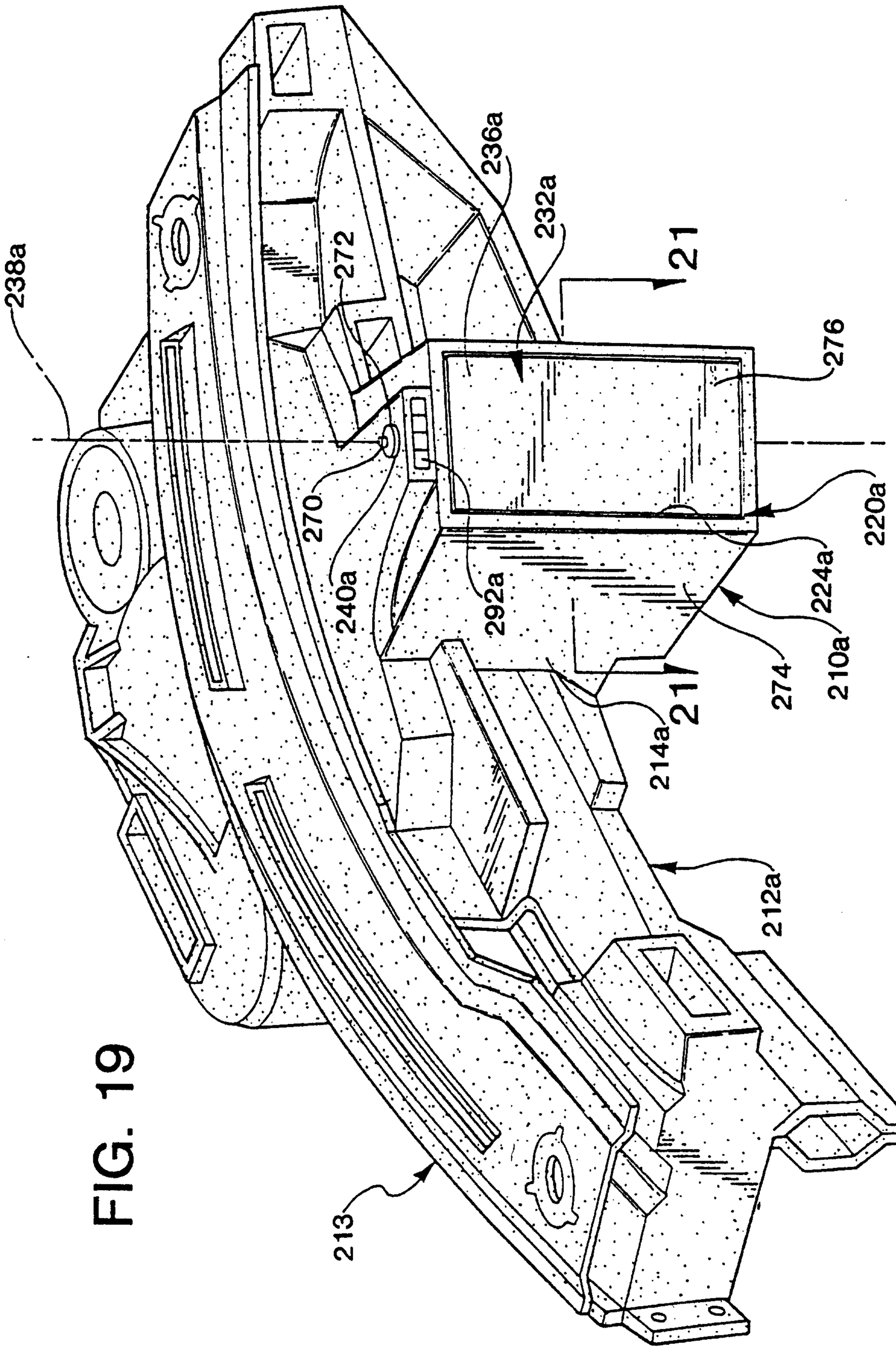
238a
272
236a
232a
21
276
270
240a
292a
220a
224a
274
210a
214a
212a
213

FIG. 19

FIG. 20

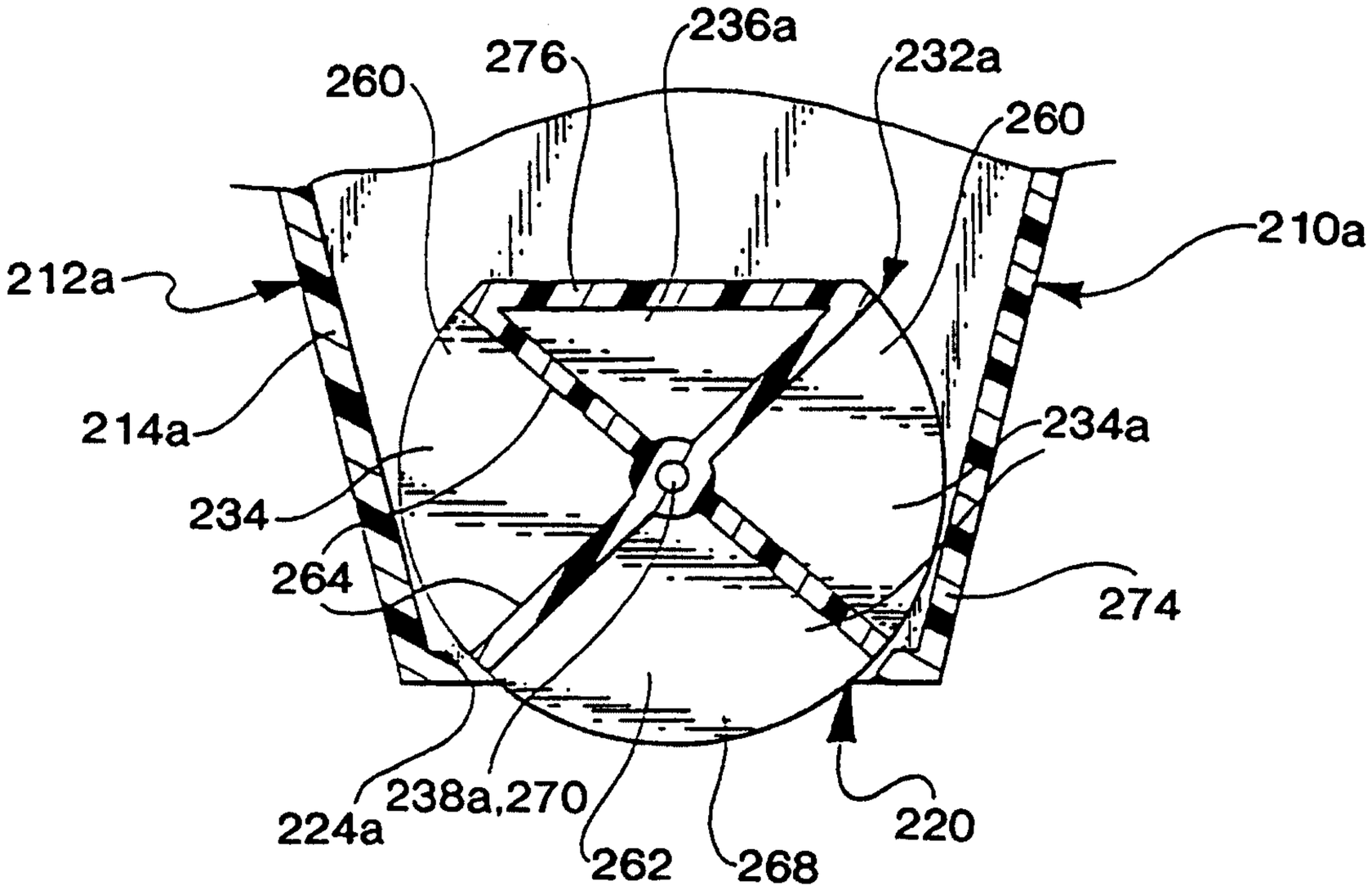
260
276
236a
232a
260
210a
212a
214a
234a
234
264
274
224a
238a,270
262
268
220

FIG. 21

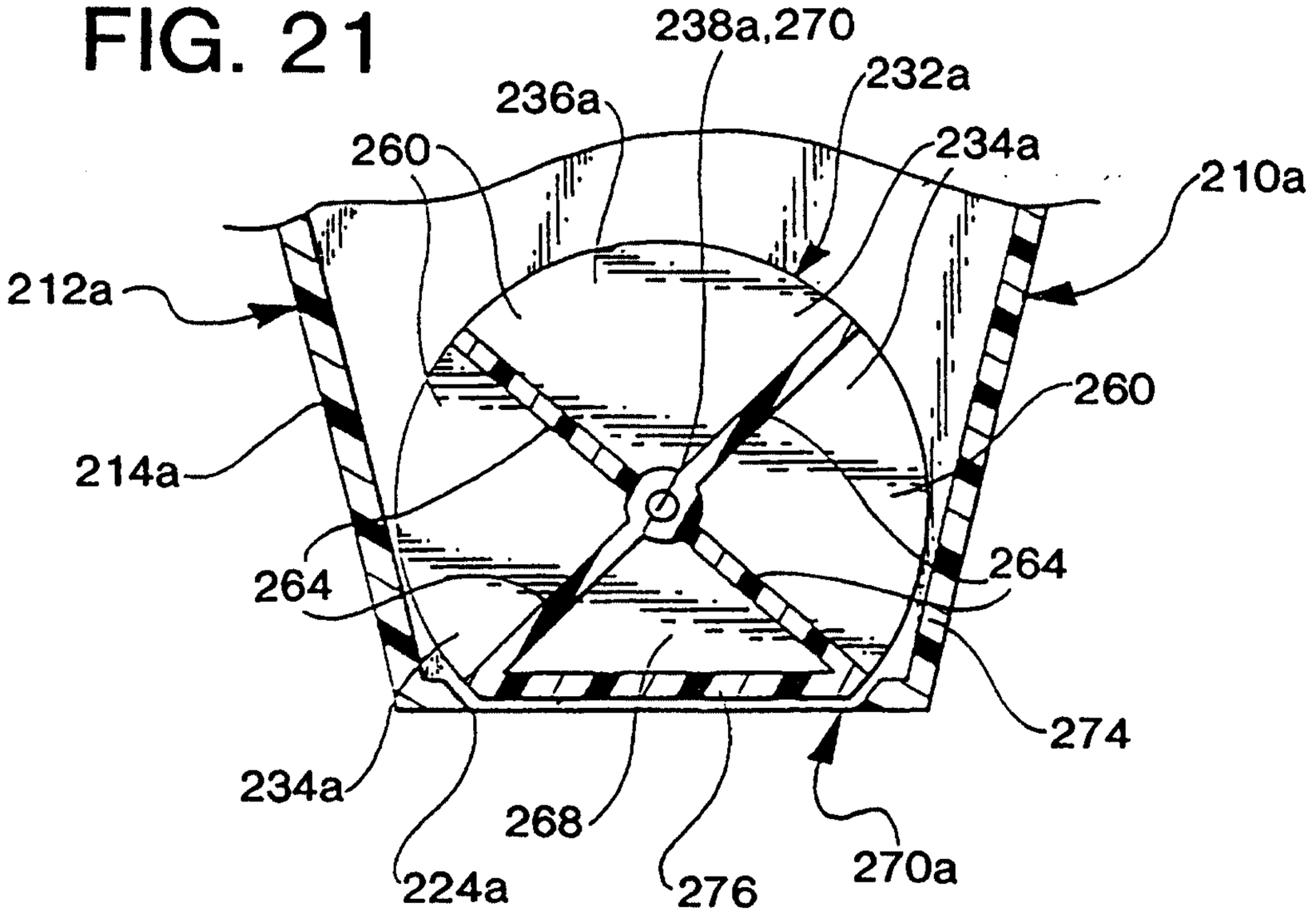
238a,270
232a
236a
234a
260
210a
212a
260
214a
264
264
274
234a
268
224a
276
270a

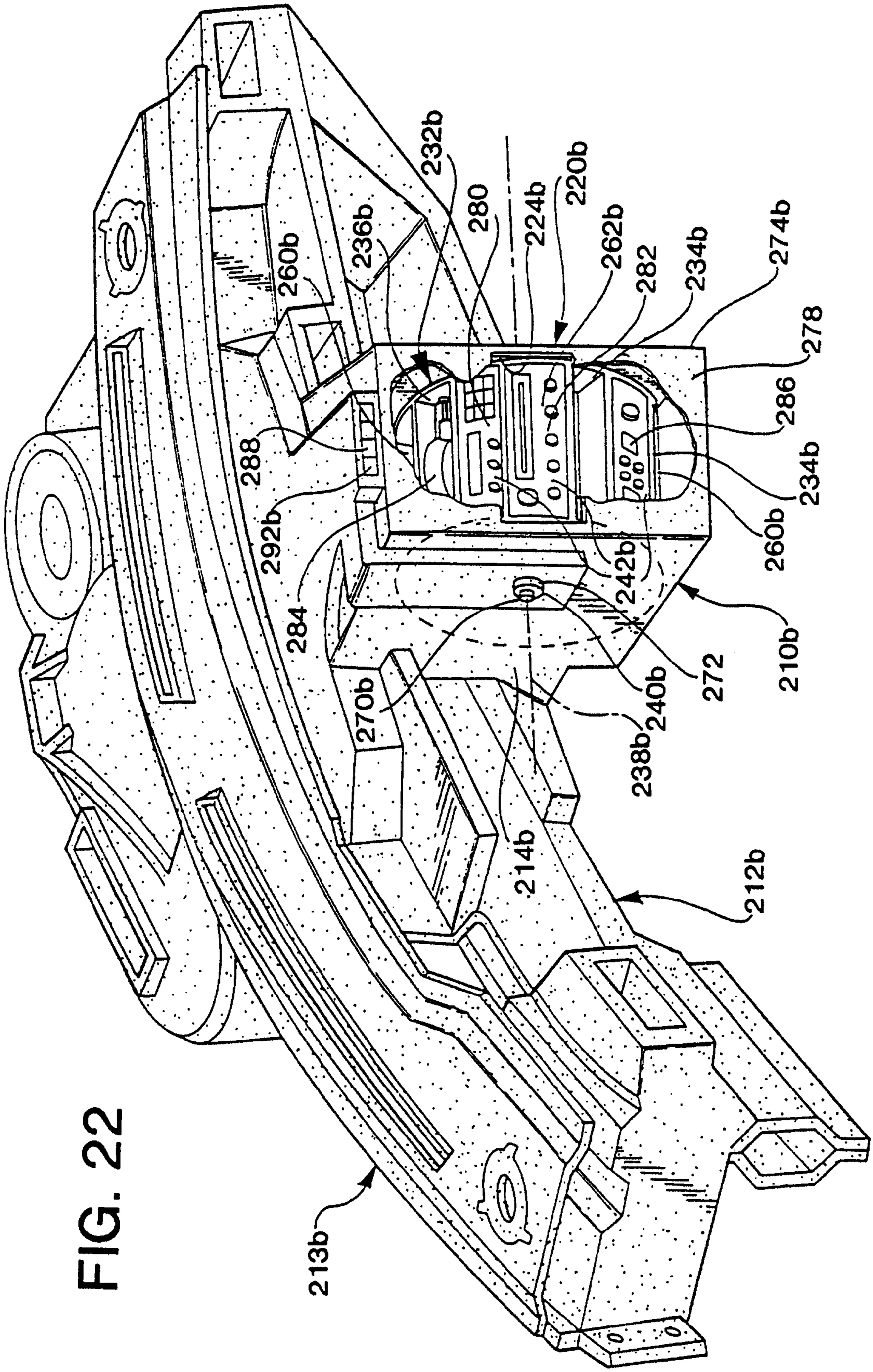
232b
280
224b
220b
262b
282
234b
274b
278
286
234b
260b
242b
210b
272
240b
238b
214b
212b
213b
260b
236b
288
292b
284
270b

FIG. 22

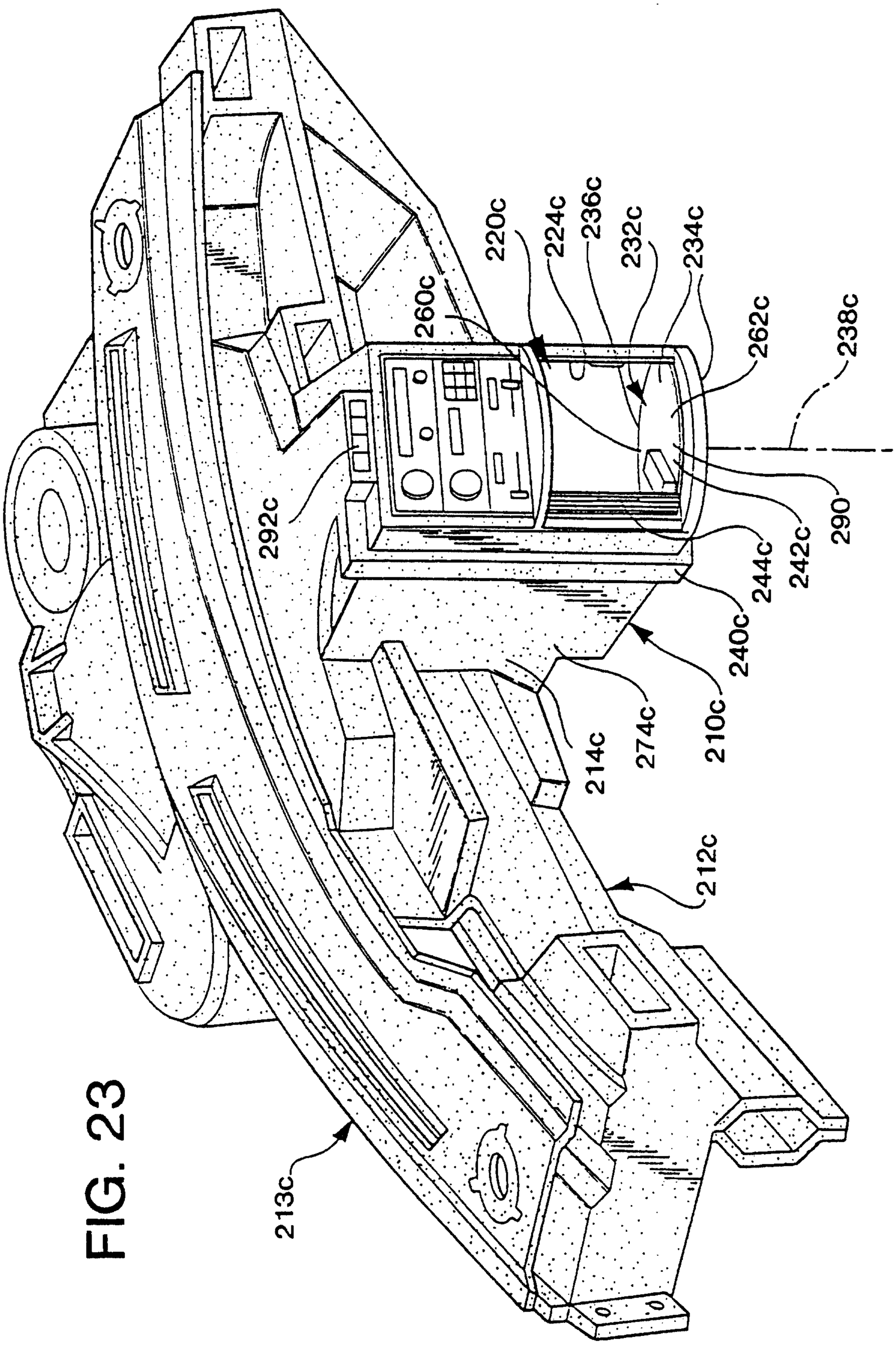
220c
224c
236c
232c
234c
260c
262c
238c
292c
290
244c
242c
240c
214c
274c
210c
212c
213c

FIG. 23

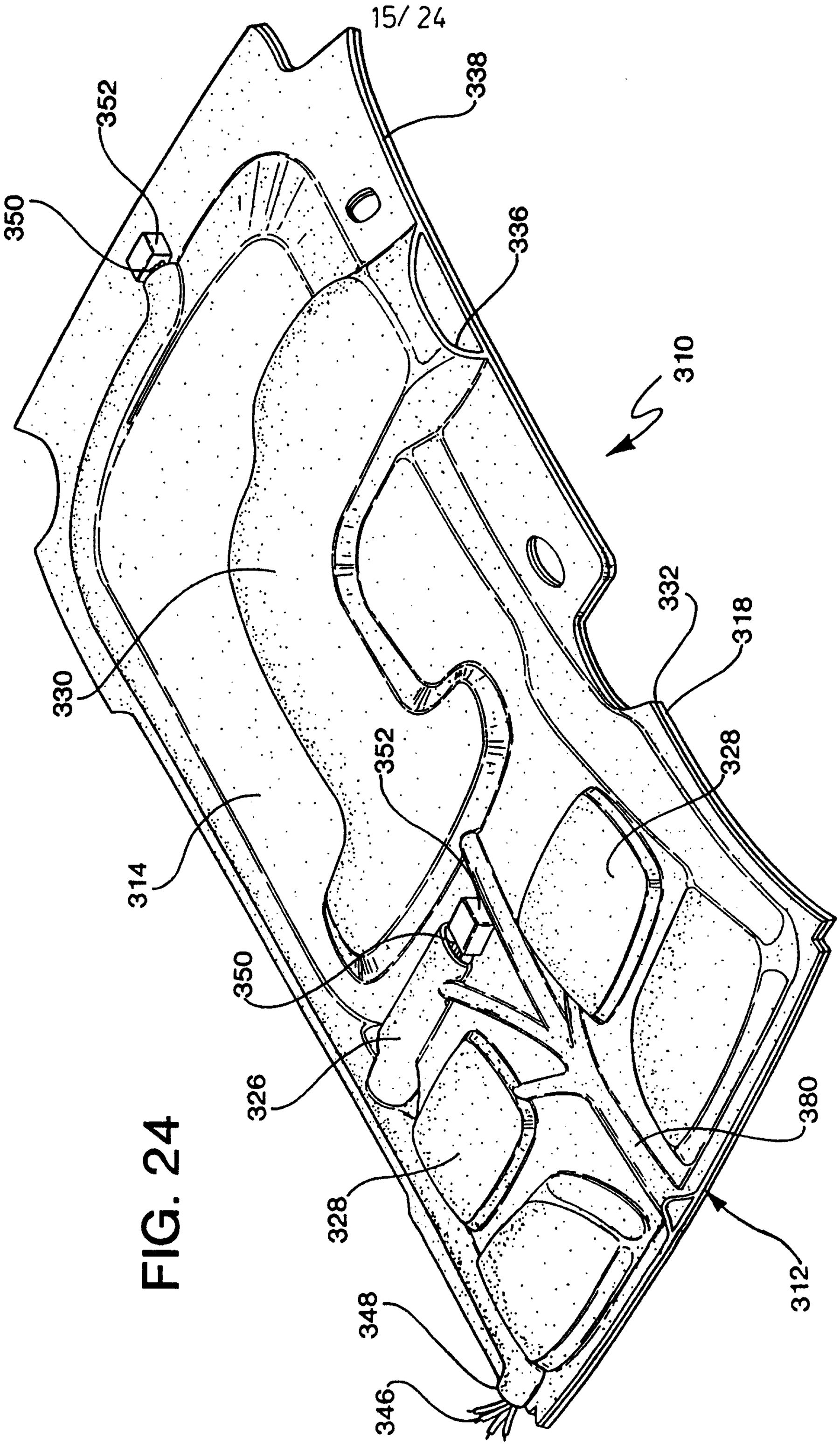
352
338
350
336
310
330
332
318
314
352
328
350
326
328
380
348
346
312

FIG. 24

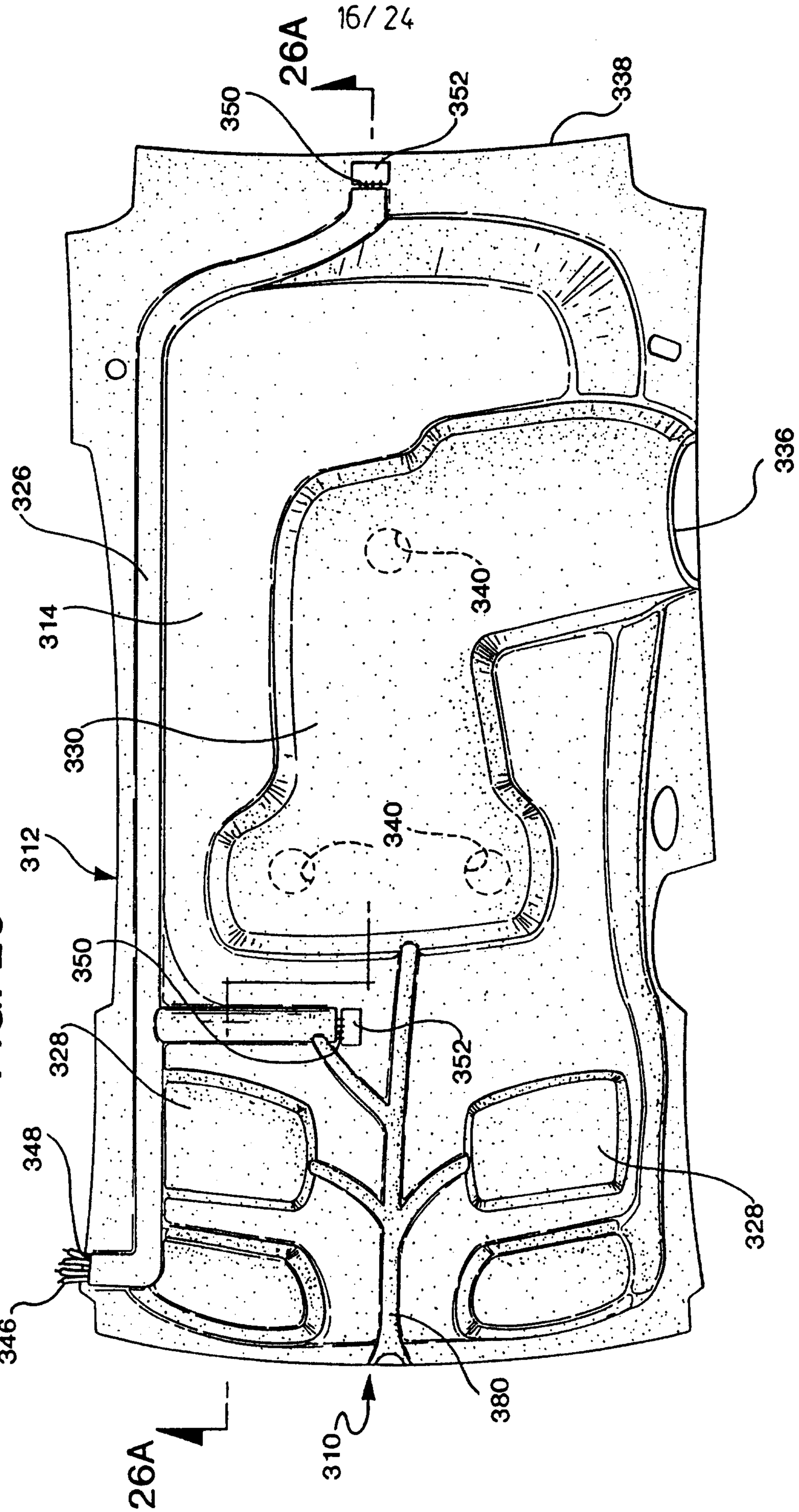
26A
350
352
338
326
336
314
340
330
340
312
350
328
352
348
328
346
380
310
26A

FIG. 25

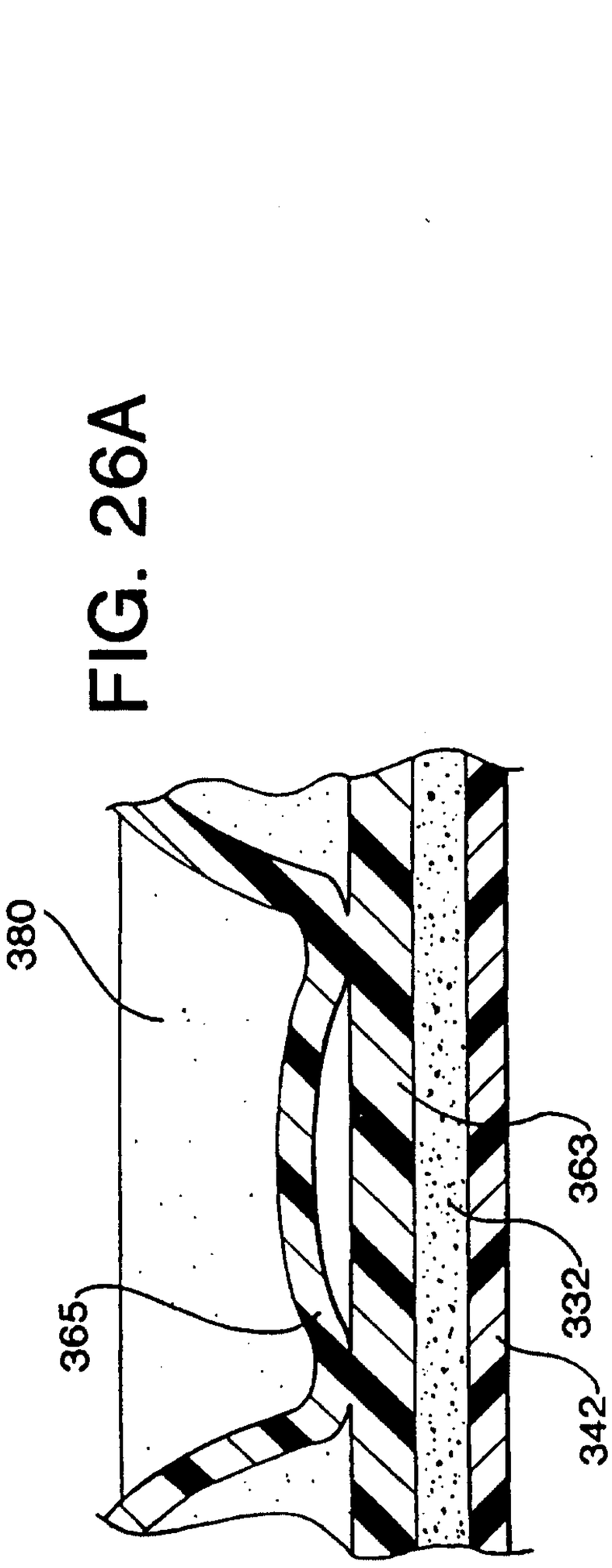

FIG. 26A

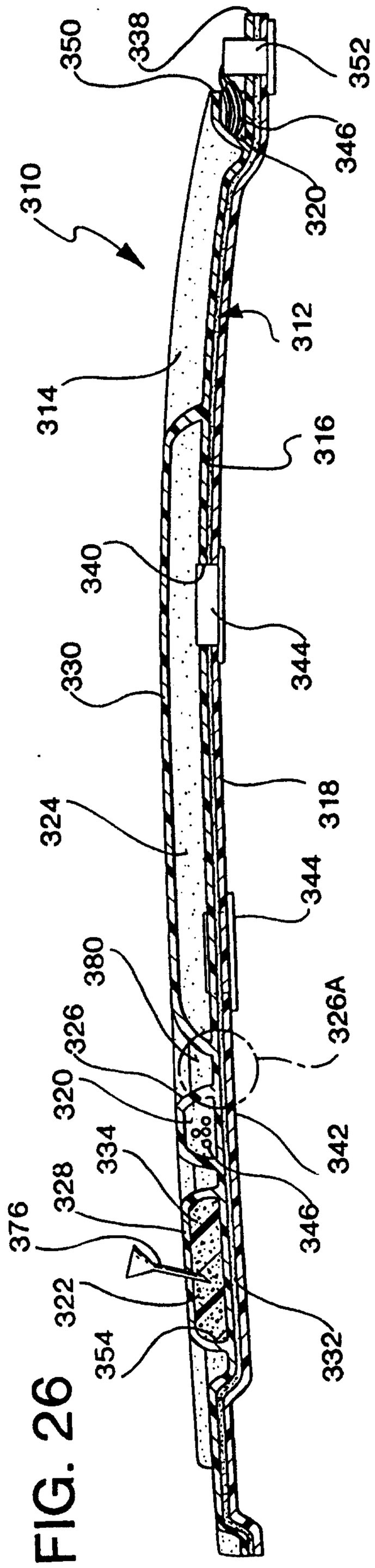

FIG. 26

FIG. 27

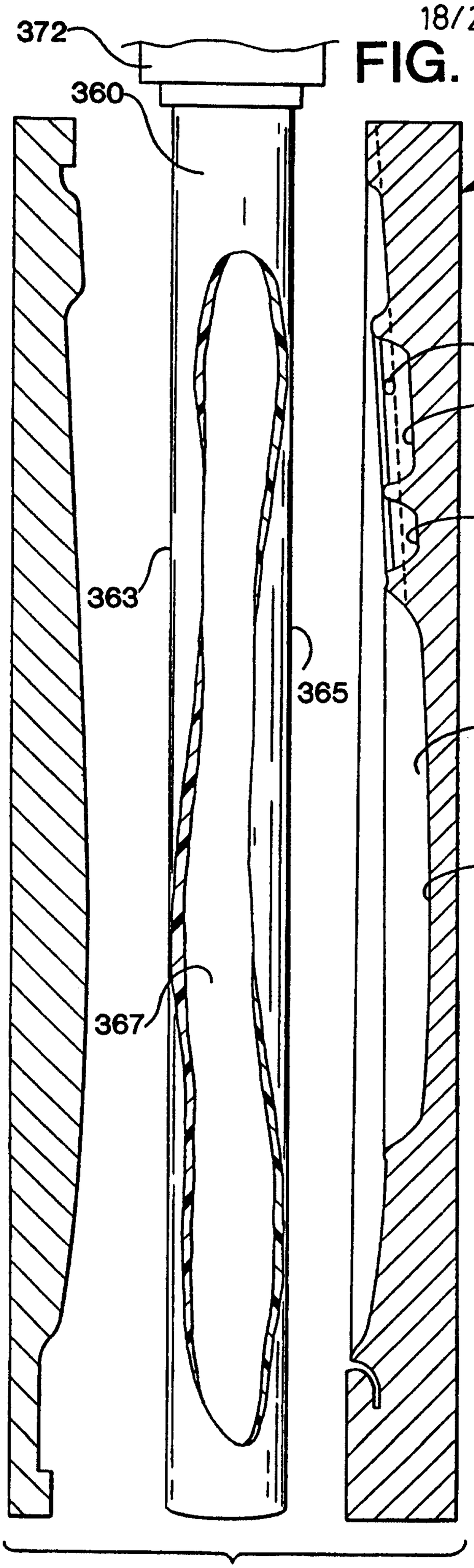
372
360
356
370
364
362
363
365
358
366
367

FIG. 28

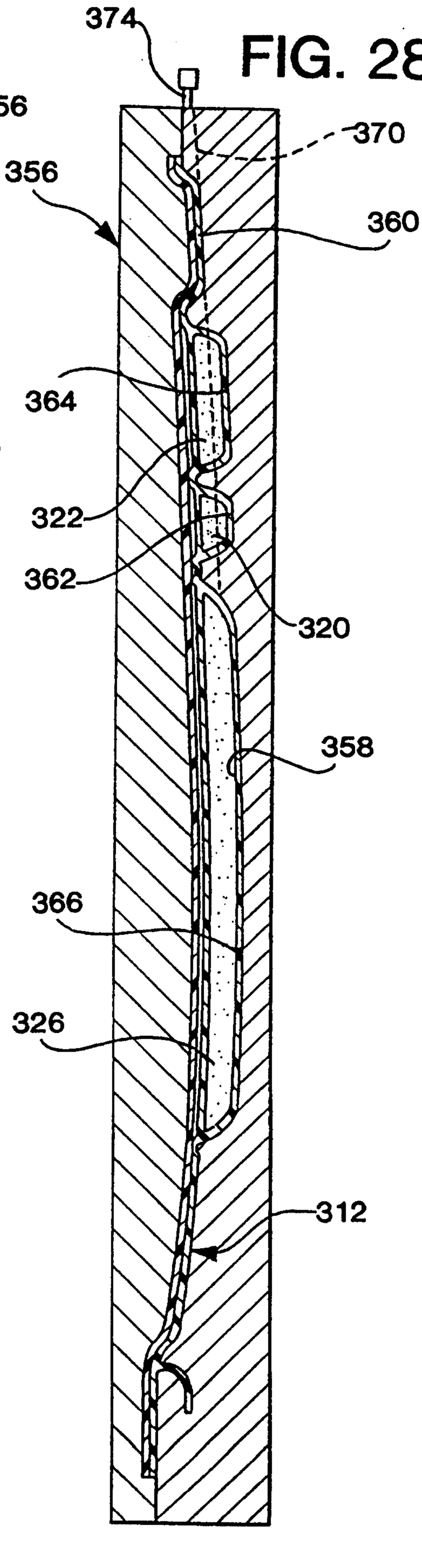
374
370
356
360
364
322
362
320
358
366
326
312

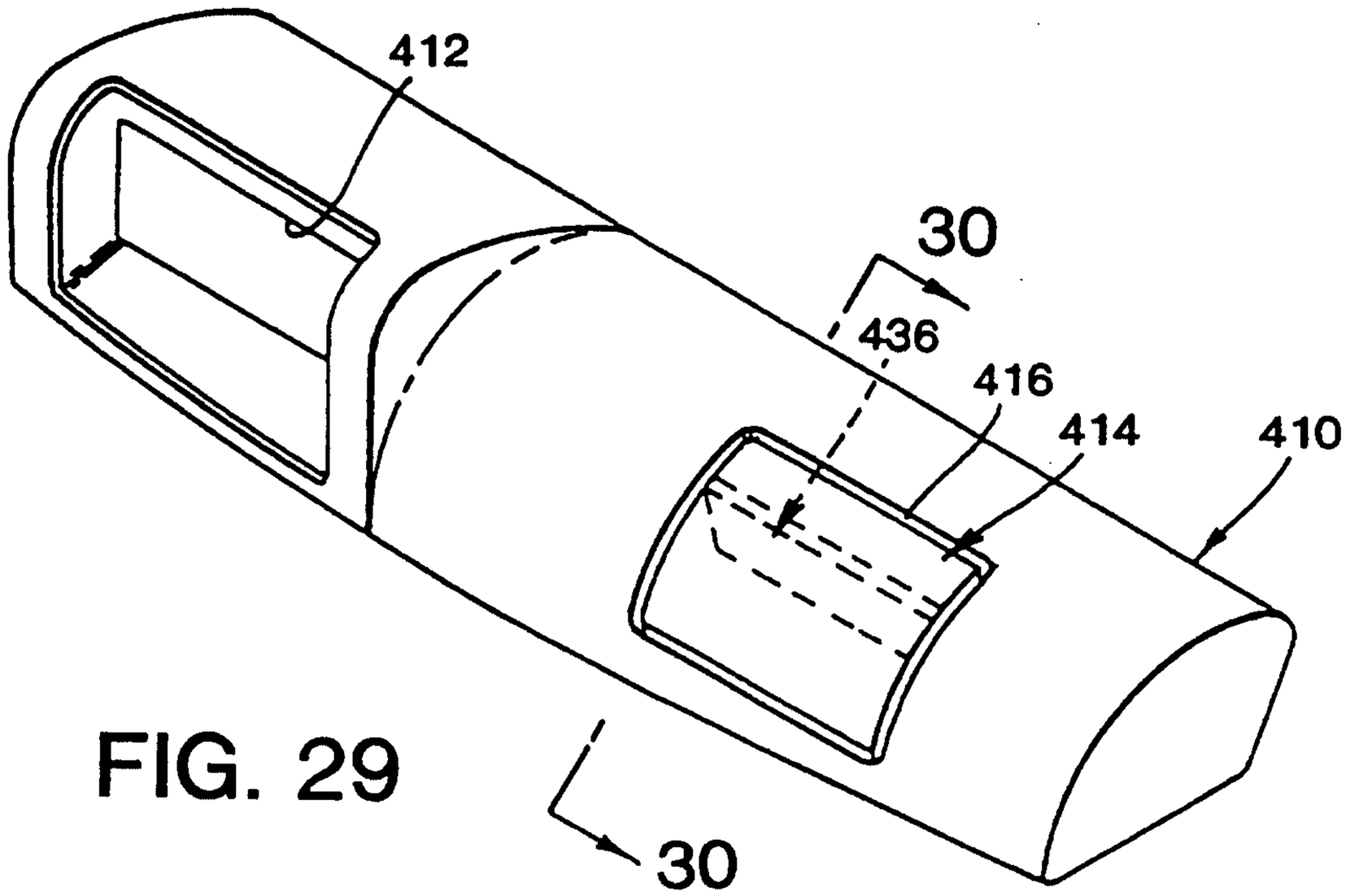
412
30
436
416
414
410
30

FIG. 29

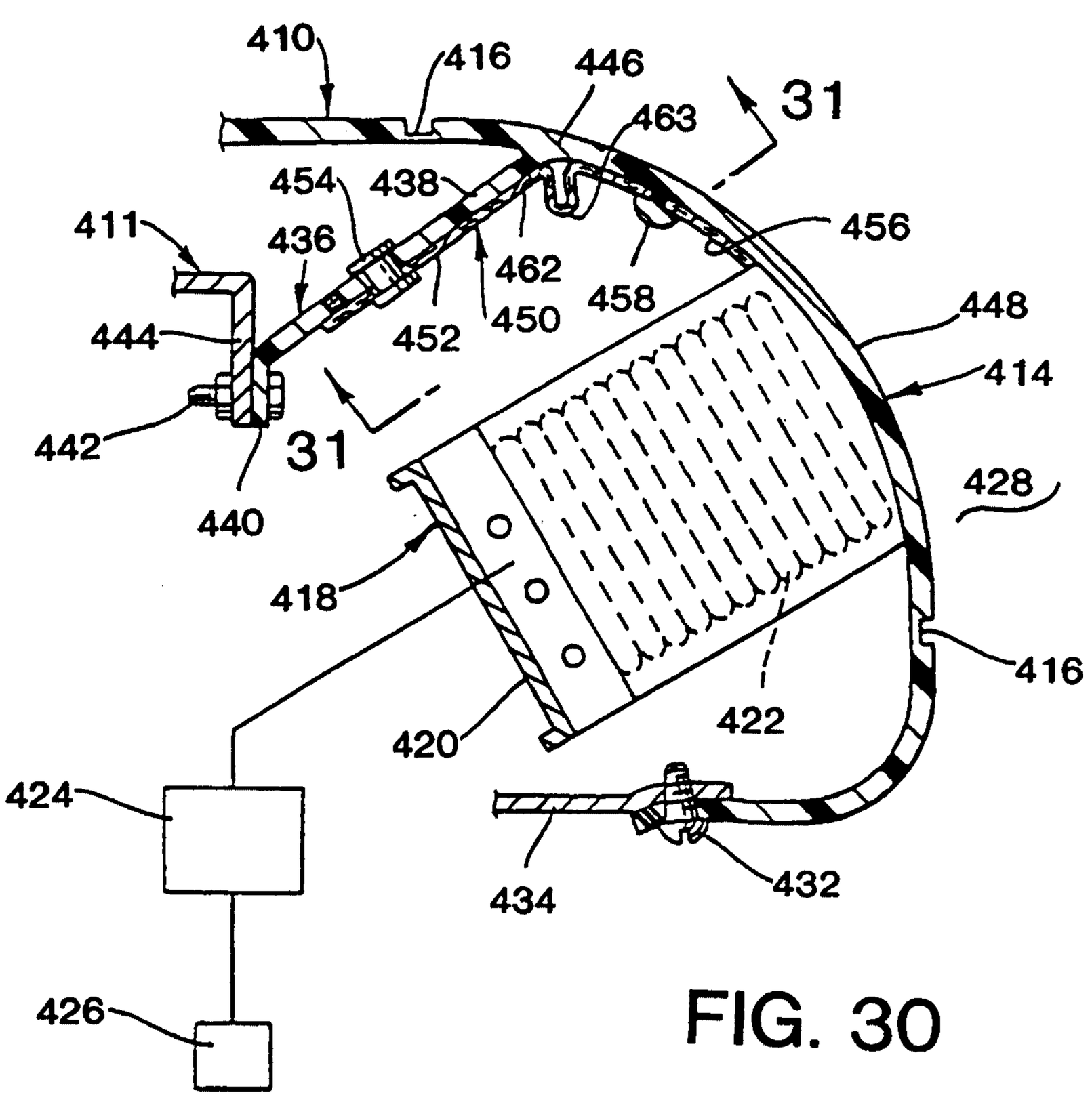
410
416
446
463
31
454
438
411
436
462
456
458
444
452
450
448
414
442
31
428
440
418
416
422
420
424
434
432
426

FIG. 30

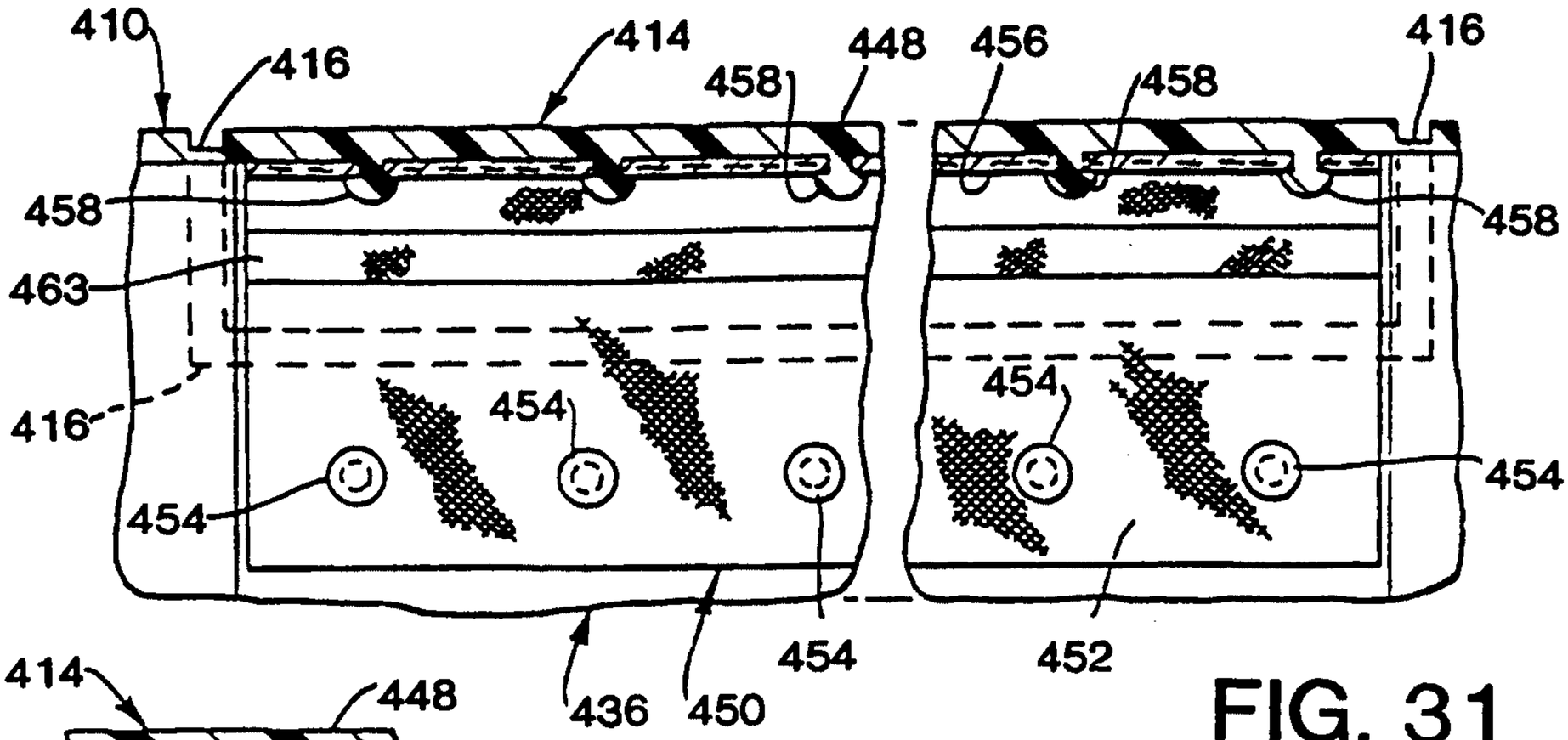

FIG. 31

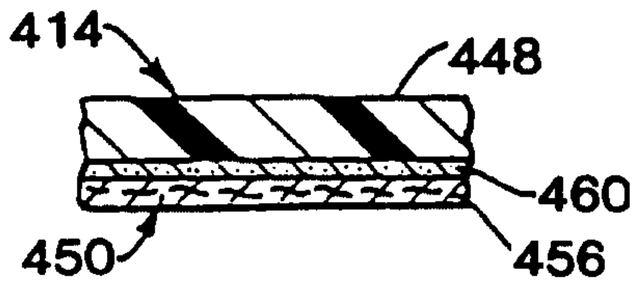

FIG. 32

FIG. 33

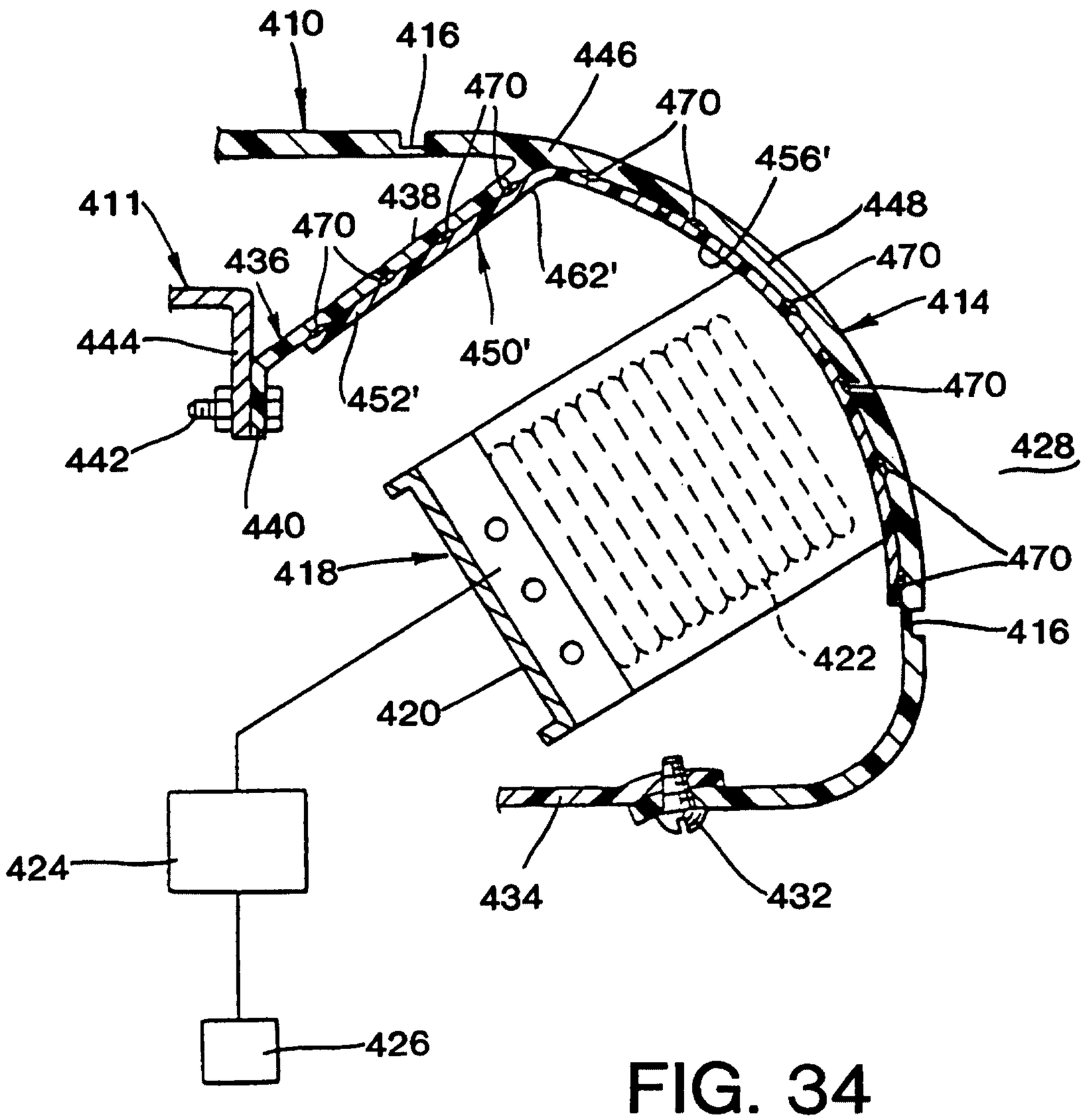
410
416
446
470
470
456'
411
438
448
470
436
462'
470
414
444
450'
452'
470
428
442
440
418
470
416
422
420
424
434
432
426

FIG. 34

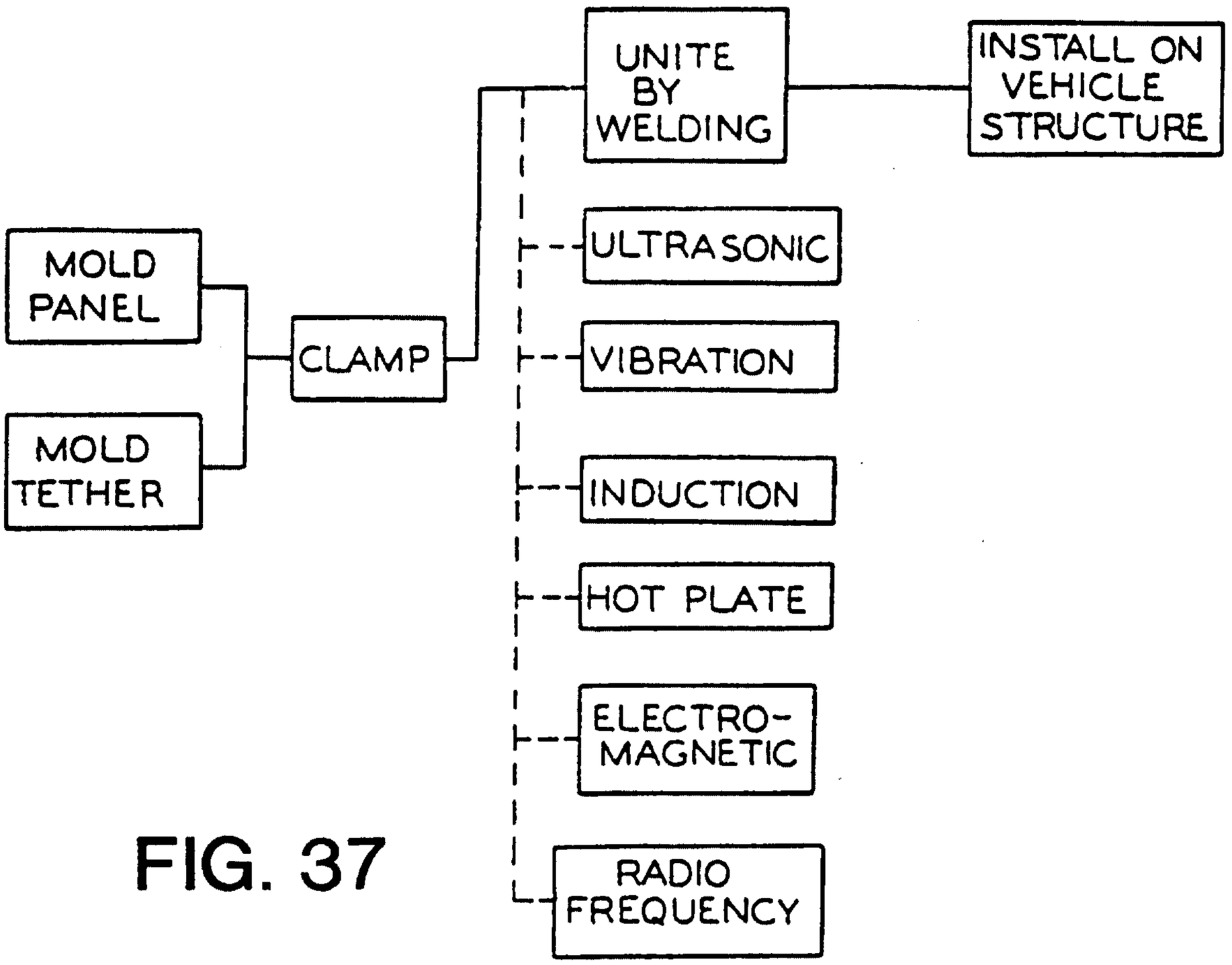

FIG. 37

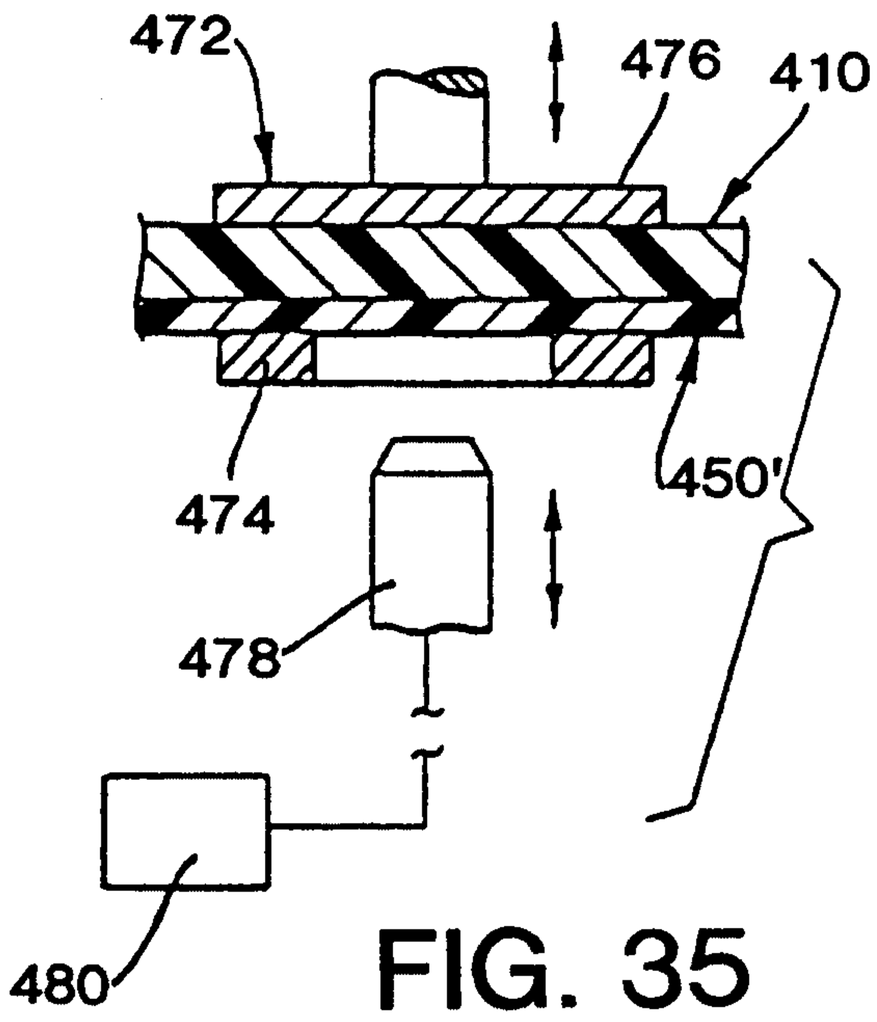

FIG. 35

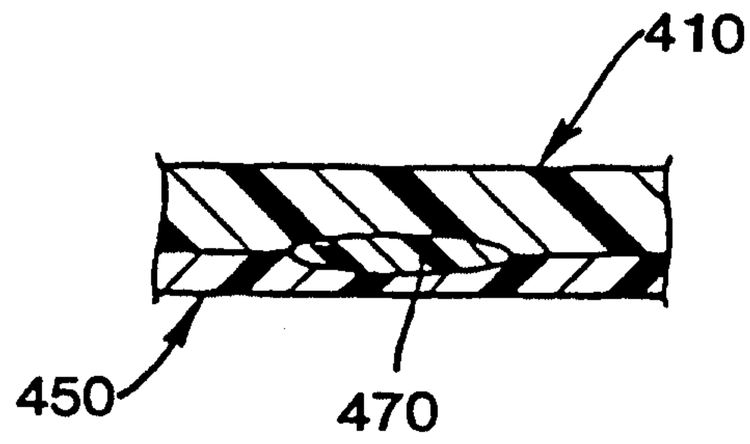

FIG. 36

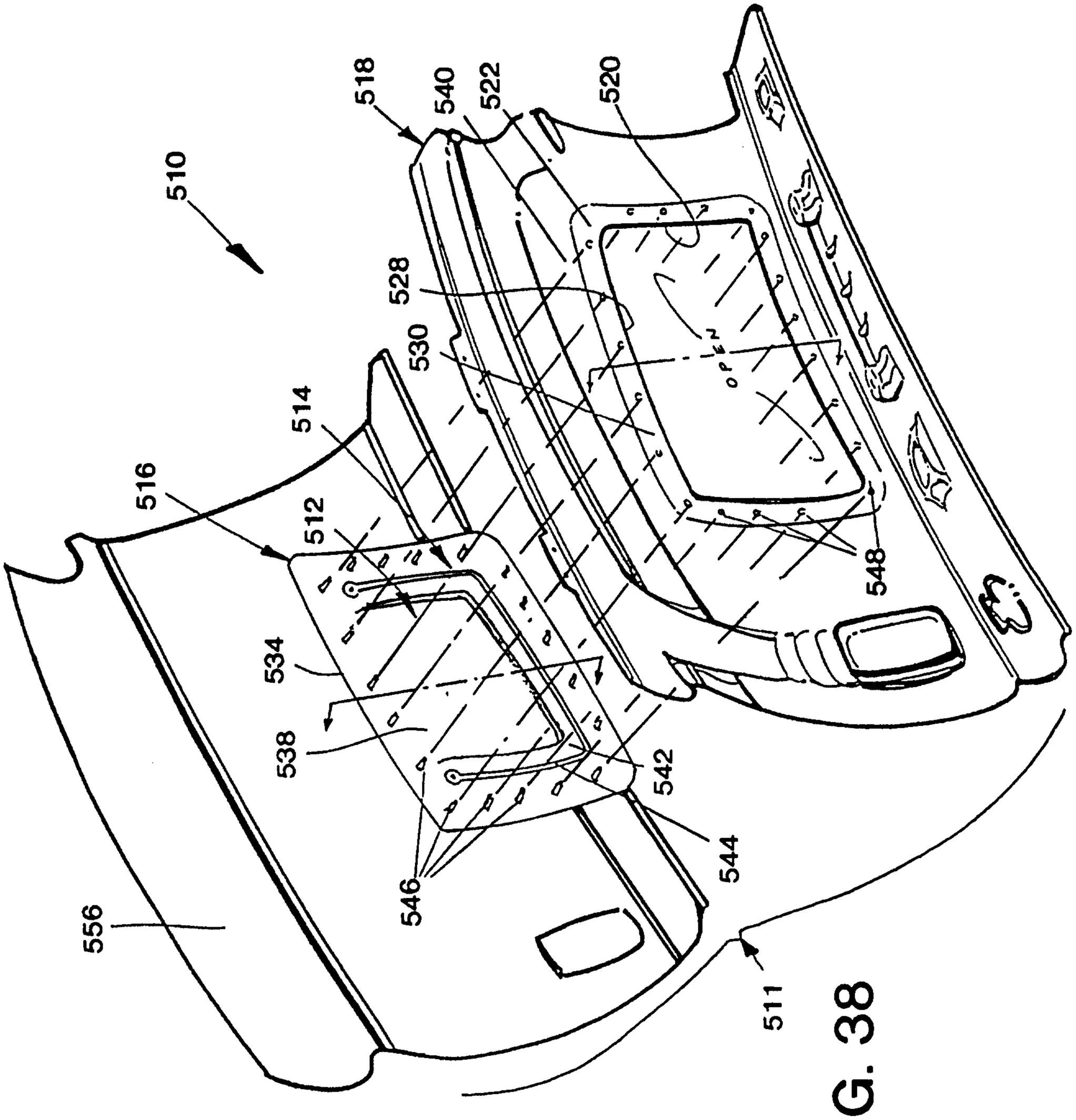
510
511
512
514
516
518
520
522
528
530
534
538
540
542
544
546
548
556
OPEN

FIG. 38

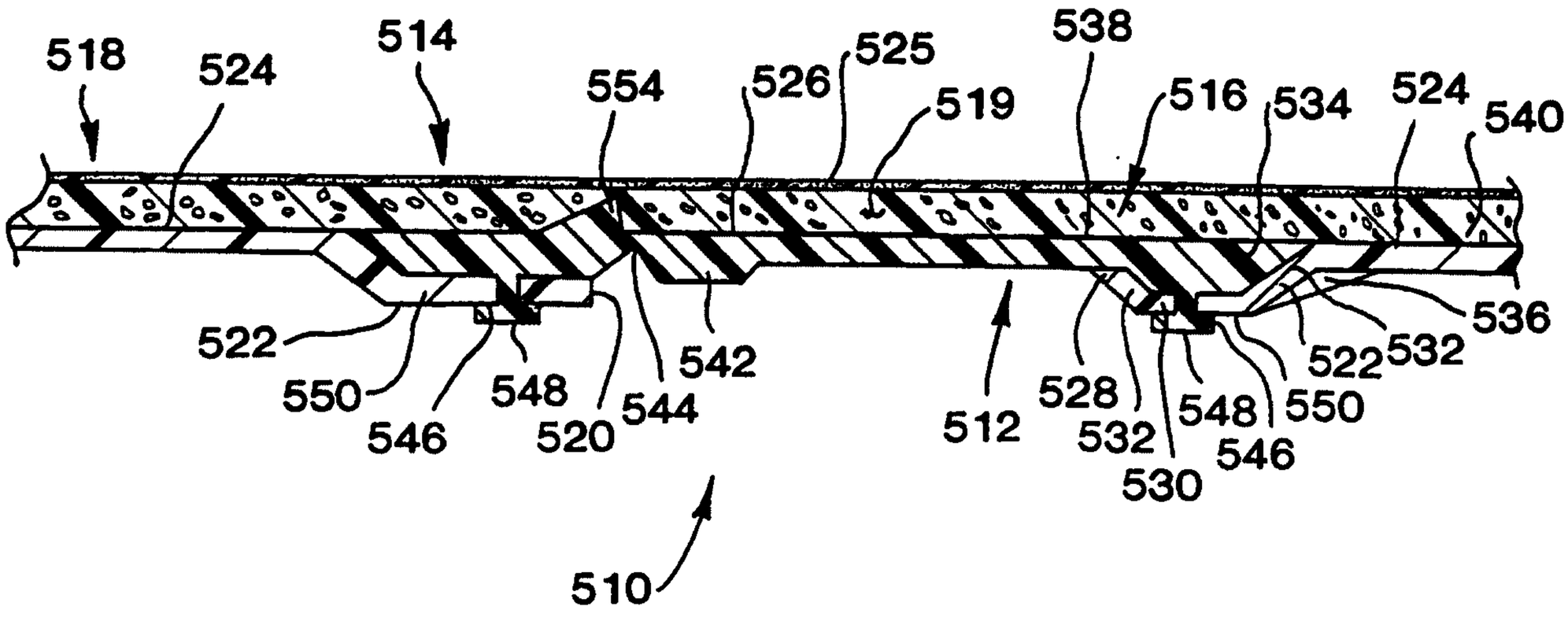
518
524
514
554
526
525
519
538
516
534
524
540
522
550
546
548
520
544
542
512
528
532
530
548
546
550
522
532
536
510

FIG. 39

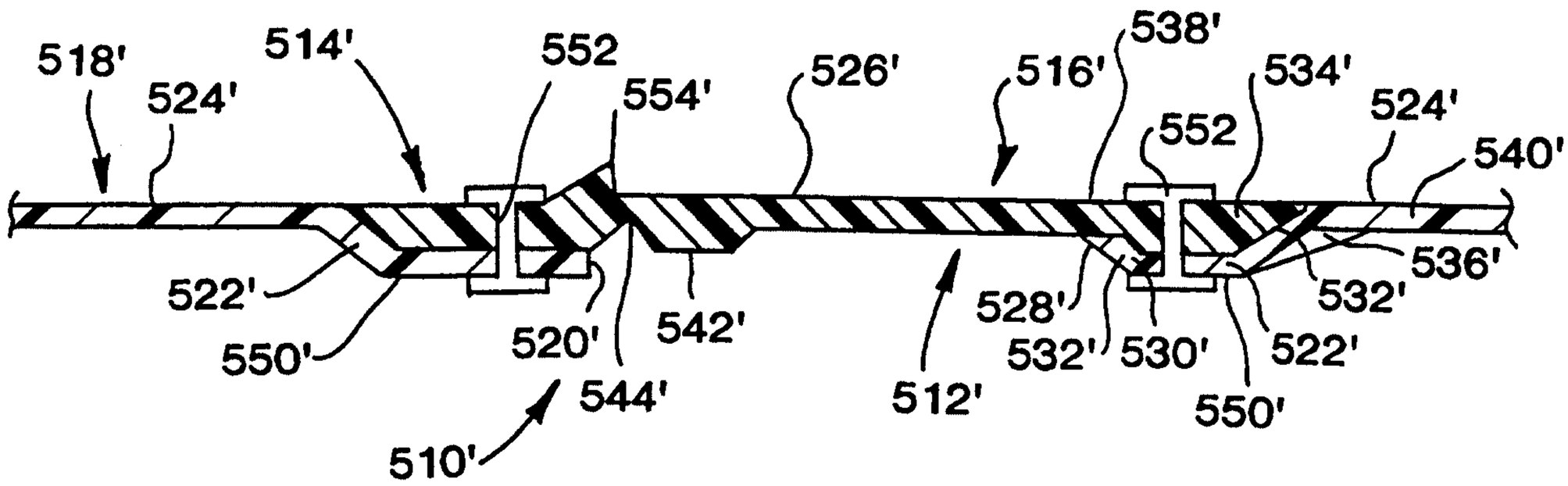
518'
524'
514'
552
554'
526'
516'
538'
534'
524'
552
540'
522'
550'
520'
542'
544'
512'
528'
532'
530'
522'
550'
532'
536'
510'

FIG. 40