(12) INTERNATIONAL APPLICATION PUBLISHED UNDER THE PATENT COOPERATION TREATY (PCT)

(19) World Intellectual Property Organization
International Bureau

(43) International Publication Date
20 February 2003 (20.02.2003)

PCT

(10) International Publication Number
WO 03/013257 A1

(51) International Patent Classification[7]: A21C 13/02, B29C 43/24, 43/46, D21G 1/00

(21) International Application Number: PCT/EP01/09087

(22) International Filing Date: 7 August 2001 (07.08.2001)

(25) Filing Language: English

(26) Publication Language: English

(71) Applicant and
(72) Inventor: **CONCETTA, Bernardo** [IT/IT]; Via Rossini, 247, I-87036 Rende (IT).

(74) Agent: **CIARDULLO, Anna**; Via Risorgimento, 8, I-35137 Padova (IT).

(81) Designated States *(national)*: AE, AG, AL, AM, AT, AU, AZ, BA, BB, BG, BR, BY, BZ, CA, CH, CN, CR, CU, CZ, DE, DK, DM, DZ, EE, ES, FI, GB, GD, GE, GH, GM, HR, HU, ID, IL, IN, IS, JP, KE, KG, KP, KR, KZ, LC, LK, LR, LS, LT, LU, LV, MA, MD, MG, MK, MN, MW, MX, MZ, NO, NZ, PL, PT, RO, RU, SD, SE, SG, SI, SK, SL, TJ, TM, TR, TT, TZ, UA, UG, US, UZ, VN, YU, ZA, ZW.

(84) Designated States *(regional)*: ARIPO patent (GH, GM, KE, LS, MW, MZ, SD, SL, SZ, TZ, UG, ZW), Eurasian patent (AM, AZ, BY, KG, KZ, MD, RU, TJ, TM), European patent (AT, BE, CH, CY, DE, DK, ES, FI, FR, GB, GR, IE, IT, LU, MC, NL, PT, SE, TR), OAPI patent (BF, BJ, CF, CG, CI, CM, GA, GN, GQ, GW, ML, MR, NE, SN, TD, TG).

Published:
— *with international search report*

For two-letter codes and other abbreviations, refer to the "Guidance Notes on Codes and Abbreviations" appearing at the beginning of each regular issue of the PCT Gazette.

(54) Title: DOUGH FORMING APPARATUS

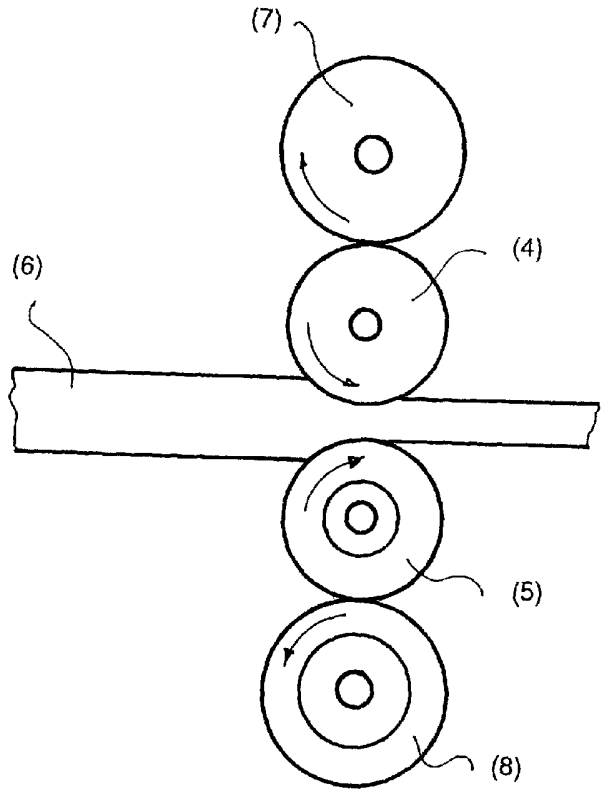

apparatus according to the invention

(57) Abstract: The invention relates to a dough forming apparatus comprising at least a first couple of rollers formed by first and second rollers forming a nip therebetween through which the dough to be formed passes and whereby the thickness of the dough is reduced, said apparatus comprising at least a further couple of rollers formed by third and fourth rollers, said third roller being in rotational contact with said first roller and said fourth roller being in rotational contact with said second roller, said apparatus further comprising support means for said rollers whereby the only allowed relative movement between said third and first roller and said fourth and second roller respectively is rotational movement, whereby the deformation of the rollers of said couples due to the resistance of the dough material being worked is reduced and package, quality control and economic problems are improved.

WO 03/013257 A1

DOUGH FORMING APPARATUS

The invention relates to a dough forming apparatus.

There are known in the art apparatuses for dough forming, said apparatuses having couples of rollers forming a nip therebetween, whereby the number of couples can vary from one in a simple non-professional machine for making dough at home to more couples of rollers in series the one after the other in professional or industrial apparatuses, whereby a stepped reduction of thickness is obtained in a continuous feeded mass of dough after passing each couple of rollers in the reduction path.

After the sheeting the continuously sheeted dough is cut in sheets by cutting means.

However said apparatuses have drawbacks, an important one being the deformation of the rollers of said couples due to the resistance of the dough material being worked. This deformation leads to an uneven thickness of the continuously sheeted dough, said thickness being generally speaking more than the requested value in a center zone of the nip between the rollers of the reduction couple and less than the requested value in a zone near to the supports of the rollers. Due to the uneven thickness therefore the final product, e.g. crackers or biscuits in the preparation of which said

apparatuses are normally used, would exhibit a different weight and dimensions per product unit, leading to package, quality control and economic problems.

After sheeting the continuous mass of dough is cut in sheets by cutter means arranged transversely on the working line.

A known way to obviate to said drawback is to arrange after the cutting section a second reduction line of couples of rollers, said line being substantially rotated of 90 degrees with regard to the first line. In this way what was the central zone of the continuous sheeted dough in the first line becomes a zone in a cut dough sheet which extends on the whole length of the nip between the rollers of the second lines, whereby a requested thickness can be obtained on the whole width of the dough sheet.

This solution is not however satisfactory due to the cost of providing said second line of couples of rollers and to the deformation problem which is yet present, however not so massive as in the first line.

The present invention as define in the appended claims does not require said second reduction line and minimises the roller deformation, providing therefore an efficacious and economic solution to the above problem.

List of drawings

Figure 1 shows a state of the art apparatus;

Figure 2 shows dimensions and bending deformations in the prior art rollers;

Figure 3 shows a lateral view of an apparatus according to the invention;

Figure 4 shows a front view of an apparatus according to the invention;

Figure 5 shows bidimensional schemes of support means;

Figure 6 shows dimensions in the rollers of an apparatus according to the invention;

Figure 7 shows a second embodiment of an apparatus according to the invention;

Figure 8 shows a third embodiment of an apparatus according to the invention.

By referring to the above drawings a detailed description of at least one preferred embodiment will be made as follows:

Figure 1 relates to a prior art dough forming apparatus, said apparatus comprising couples (1, 2, 3) of rollers (4, 5) defining a nip (n) therebetween, said couples being positioned the one after the other in a linear reduction path, said apparatus comprising moreover cutting means

for cutting the continuous fed dough (6) in dough sheets and a second reduction line comprising further couples of rollers defining a nip therebetween, said further couples being positioned the one after the other in a second linear reduction path, said second path forming an angle of substantially 90 degrees with the first path, said cutting means and second linear reduction path not being shown in the drawings.

Per se known frame, energizing, supporting and nip adjusting means for the rollers, feeding means for feeding a continuous mass of dough to the first couple of rollers of the first reduction path, transferring means between the first and second path and transport means for transporting the continuous dough mass and the dough in sheets between the couples of the rollers of the first and second path respectively are also present, although not described in the figure.

It is known in the art that the reduction ratio of a couple of rollers, said ratio being defined as the ratio "thickness before reduction/thickhness after reduction", should be below 5 in order to obtain a smooth flow pattern of the dough material, as it is requested e.g. for crackers and biscuits; a ratio between 5 and 7 is critical and a ratio of over 7 leads to mixing of the dough material due to backflow of the dough in the nip, whereby e.g. a layered structure as e.g. in puff pastry dough would be badly damaged. In

other occasions however a mixing can be desiderable, depending on the type of worked dough.

In the described prior art apparatus said ratio is 3, as usual in the biscuits and crackers industry.

The rollers are made of e.g. polished stainless steel or other known suitable material, whereby the dough does not stick and hygienic standards of the food industry are respected.

Figure 2 relates to the bending deformation of one of the couples of rollers in the first reduction path.

The thickness is more than the requested value in a center zone of the nip between the rollers of the reduction couple and less than the requested value in a zone near to the supports of the rollers.

Due to the vicinity of the supports however, the bending deformation in the support zone is very less important than that in the center zone, so that it can be neglected. In the following only the bending deformation in the center zone of the nip will be considered. As visible in figure 2, where the dimensional scale is not coherent, i.e. some dimensions have been exaggerated or reduced in order to give a better understanding, a couple of steel rollers wherein each roller is 1.5 meter long having a nip with a set value of 27 mm exhibits during sheeting a value of the nip in the center of

30 mm, i.e. about 1.1 times, i.e. about 110% of the set value; this means that the difference between real value and set value is 3 mm, about 10% of the set value, whereby the bending deformation (f) of one roller in the center position is f = 3mm/2 =1.5 mm.

This leads therefore to a final product having weight variations in the order of 10%, according to whether it origins from the central of from the lateral zones of the nip.

In figures 3, 4 an example of an apparatus according to the invention is shown, said apparatus comprising a further couple of rollers (7, 8) rotatably accomodated in known supporting means e.g. ball bearings, said supporting means of the first roller (7) of the further couple being rigidly connected with the supporting means of the first roller (4) of the first couple of rollers (4, 5) and said supporting means of the second roller (8) of the further couple being rigidly connected with the supporting means of the second roller (5) of the first couple of rollers (4, 5) whereby no relative movements except rotation about their own axis is allowed between the rollers (4) and (7) on one hand and rollers (5) and (8) on the other hand, the first roller (7) of the further couple being in rotating contact with the first roller of the first couple (4) and the second roller (8) of the further couple being in rotatable contact with the second roller (5) of the first couple, said

apparatus further comprising *per se* known and not shown in the drawings frame, energizing and nip adjusting means for the rollers (4, 5), feeding means for feeding a continuous mass of dough to the first couple of rollers, cutting means and transport means for transporting the continuous dough mass and the dough in sheets between the further first couples of the rollers disposed in a reduction path the one after the other and downstream of the cutting means respectively.

It should be noted that it is also possible that the support means of the further couple be connected to the frame independently from the support means of the first couple, said further couple having its own adjusting means, the only condition being that no relative movements except rotational contact are allowed between the rollers.

In this regard it can be noted that when using for the rollers a bidimensional scheme according to e.g. figures 4, 5, which allows three freedom degrees for the movements, i.e. two movements in directions lying on the plane of the scheme and a rotation about an axis orthogonal to said scheme, the support means can be schematized as simple bearing, hinge or full restrain (figure 5) whereby one, two and all three freedom degrees are restricted respectively.

In this embodiment for ease of understanding the diameters, lengths, materials ans support means of all the rollers are the same. Different diameters and lengths for the rollers can however be used in accordance e.g. with the type of support and/or material used for the rollers and/or with the circumstances.

In the abovedescribed embodiment of the present invention working in the same conditions of the known apparatus it has been found that the value of the bending deformation (f) of a roller in the center zone of the nip is about 0.2 mm, i.e. about 7 and a half times less than the previous value. This leads in turn to final product in which the dimensions, and therefore the weight, oscillate in a band of 1÷2 % instead of 10% as in the known apparatus.

The found value is due to the increased rigidity of the roller assembly and is in good accord with a theoretical previded value. With regard to Fig. 6, considering the support means as schematized by simple bearings (Fig. 5) and the fact that the rollers, as normally requested to machinery, work in the elastic, i.e. proportional part of the Hook curve, the bending elastic deformation (f) of said rollers, i.e. the deformation about an axis (c) orthogonal to the plane containing the axes of the rollers, is dependent on a cubic power of the dimension orthogonal to said axis (c) and lying in the

plane containing the axes of the rollers, more precisely it is can be described as (f) = function of the quantity $1/a*b^3$, i.e. an inverse dependence on the quantity $a*b^3$, a being the diameter of the first roller and b said dimension in the plane of the axes (figure 6).

In the case of one roller as it is in the known state of the art therefore the bending deformation (f) is dependent on $1/a^4$, a being the diameter of the roller.

It can therefore be seen that by superposing and rigidly connecting a further roller having the same diameter a the value b becomes 2a whereby by means of a simple mathematical substitution in the expression $a*b^3$, the bending deformation of the rollers, which are now to be seen as a single body with regard to rigidness, will depend on $1/8a^4$, i.e. eight times less than in the case of one roller only, the applied forces being the same in both cases.

Without modifying the remaining parameters an increase the diameter of the further roller will further reduce the bending deformation in accord to the above expressions.

According to the circumstances there is also the possibility of providing a third or more couples of superposed rollers, having the same or different diameters within a couple and between different couples.

There is also the possibility of providing four more rollers instead of two, said four rollers being in triangular relation and in rotatable contact with the first couple of rollers (see figure 7).

To obtain a very high rigidity a further embodiment provides a first or further crowns of rollers each crown having preferably one roller more than the pressed crown (see figure 8), the diameters, length, material of the rollers and type of support means being chosen in accord with the circumstances as above described.

Having described one preferred embodiment, further modifications are to be encompassed within the scope of the invention as defined in the appended claims.

CLAIMS

1. Dough forming apparatus comprising at least a first couple of rollers formed by first and second rollers forming a nip therebetween through which the dough to be formed passes and whereby the thickness of the dough is reduced, said apparatus comprising at least a further couple of rollers formed by third and fourth rollers, said third roller being in rotational contact with said first roller and said fourth roller being in rotational contact with said second roller, said apparatus further comprising support means for said rollers whereby the only allowed relative movement between said third and first roller and said fourth and second roller respectively is rotational movement.

2. Apparatus according to claim 1, comprising more than one further couple of rollers, the rollers of said more than one further couple being in rotational contact with the rollers of the precedent couple.

3. A dough forming apparatus according to claims 1, 2 where the axes of the rollers have the same direction, i.e. lie on the same plane.

4. A dough forming apparatus according to claims 1-3 where the axes of the rollers are parallel each to the other.

5. A dough forming apparatus according to claim 1-4 where the diameters of the rollers are the same.

6. A dough forming apparatus according to claims 1-4 where at least a roller of at least one of the further couples of rollers has a diameter different, preferably larger than the diameter of a roller of said first couple of rollers.

7. Dough forming apparatus comprising at least a first couple of rollers formed by first and second rollers forming a nip therebetween through which the dough to be formed passes and whereby the thickness of the dough is reduced, said apparatus comprising at least first and second crowns of rollers formed by third, fourth and fifth, sixth rollers respectively, said third and fourth rollers being in rotational contact with said first roller and said fifth and sixth rollers being in rotational contact with said second roller, said apparatus

further comprising support means for said rollers whereby the only allowed relative movement between said first, third, fifth rollers and said second, fourth and sixth rollers respectively is rotational movement.

8. Dough forming apparatus according to claim 7 comprising n further roller crowns, n being a natural number between 3 and 6, said further rollers crowns being superposed in relative rotational contact the fifth to the third to the first and the sixth to the fourth to the second, the nth pressing crown having one roller more than the nth-2 pressed one, whereby the number of rollers per crown varies from two for the first and the second crown to four for the fifth and sixth crown, said apparatus further comprising support means for said rollers of said crowns whereby the only allowed relative movement between said first, third, fifth rollers crowns and said second, fourth and sixth rollers crowns respectively is rotational movement.

9. Dough forming production line comprising one or more apparatuses according to one of the preceding claims.

10. Method for dough forming comprising the use of an apparatus according to claims 1-8 or of a production line according to claim 9.

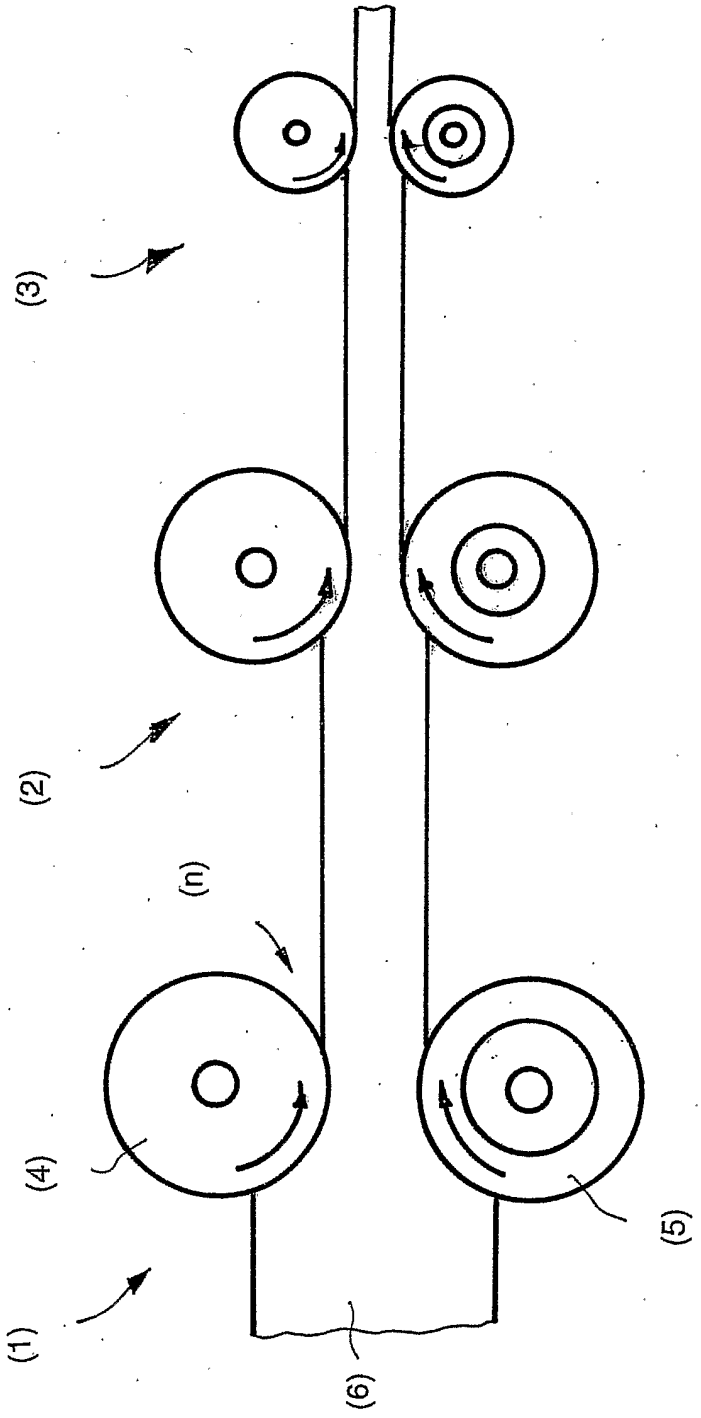

Prior art apparatus

Fig. 1

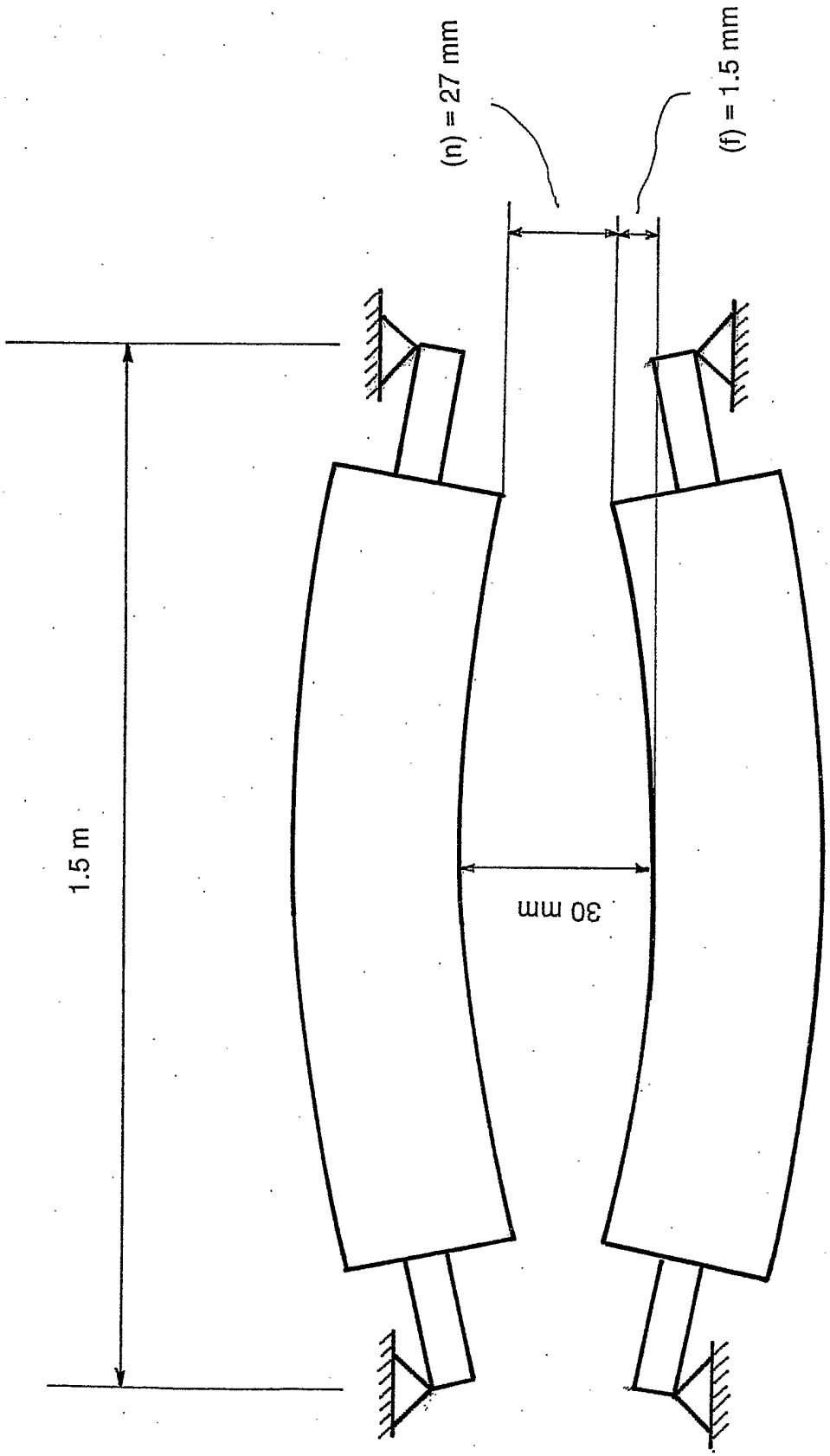

Prior art apparatus bending deformation

Fig. 2

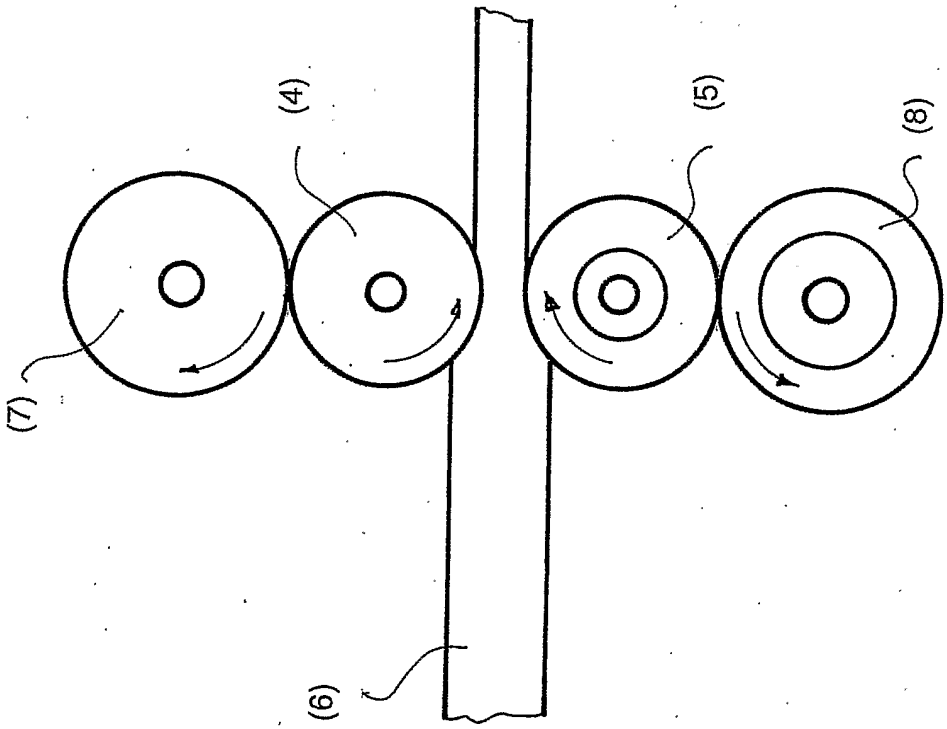

apparatus according to the invention

Fig. 3

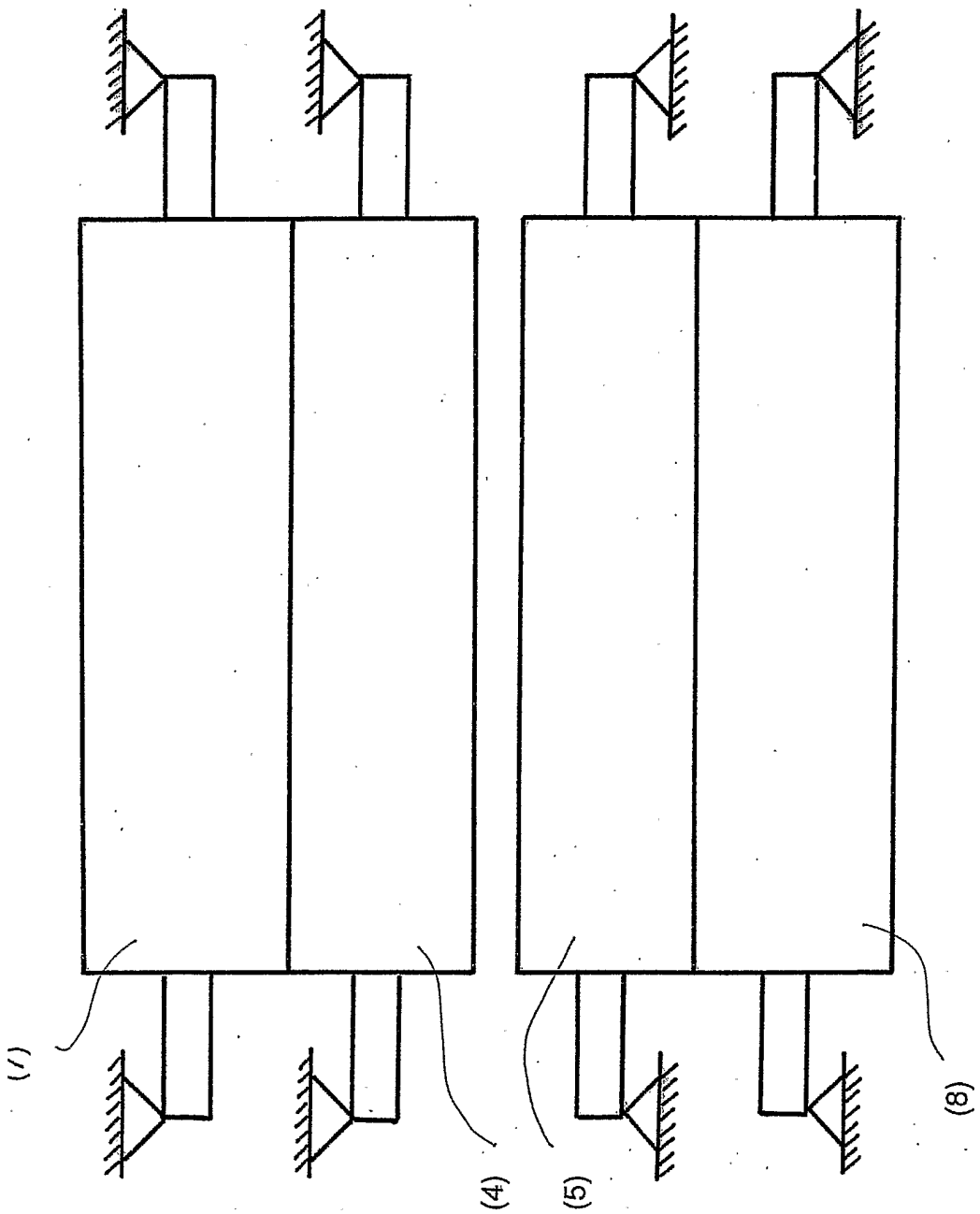

Fig. 4

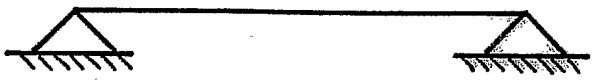

simple bearing

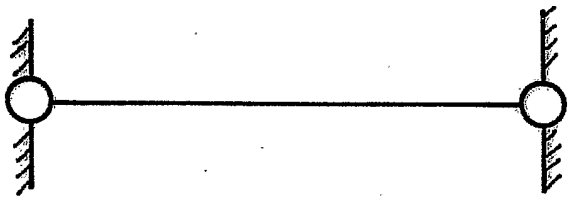

hinge

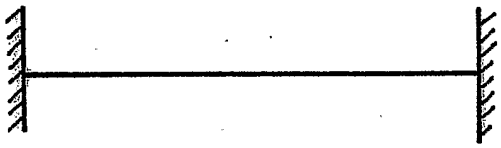

full restrain

Fig. 5

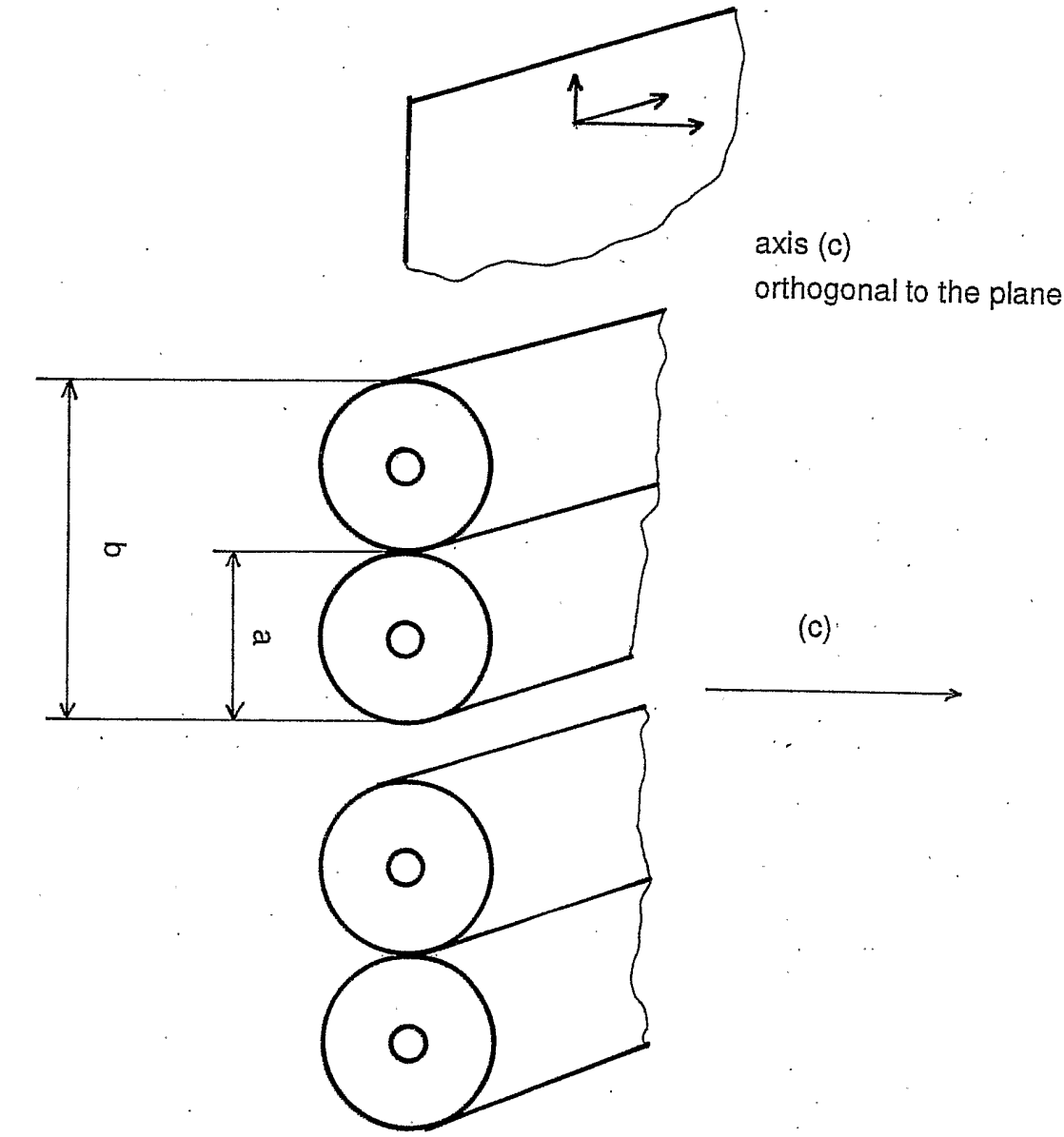
plane containing the axes of the rollers
axis (c)
orthogonal to the plane
b
a
(c)

Fig. 6

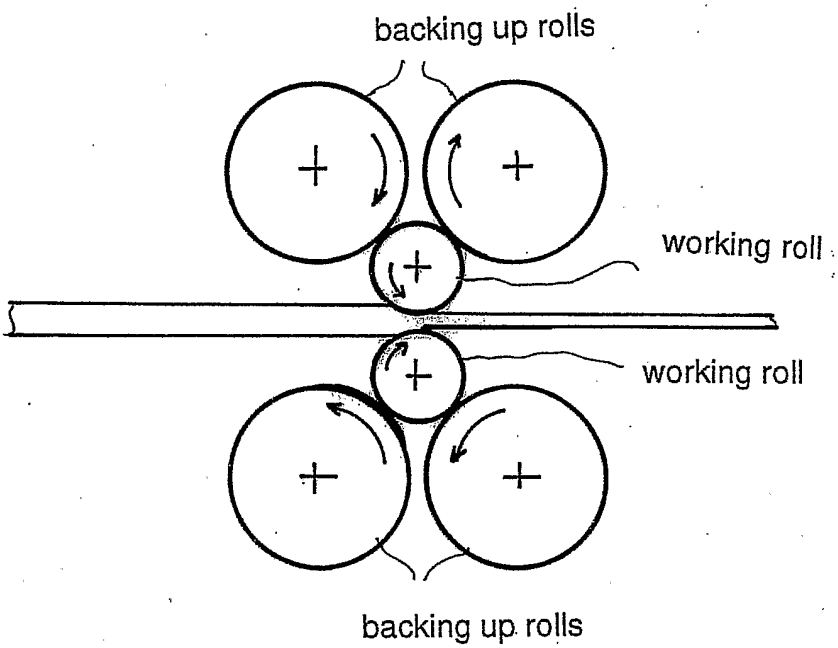
backing up rolls
working roll
working roll
backing up rolls

Fig. 7

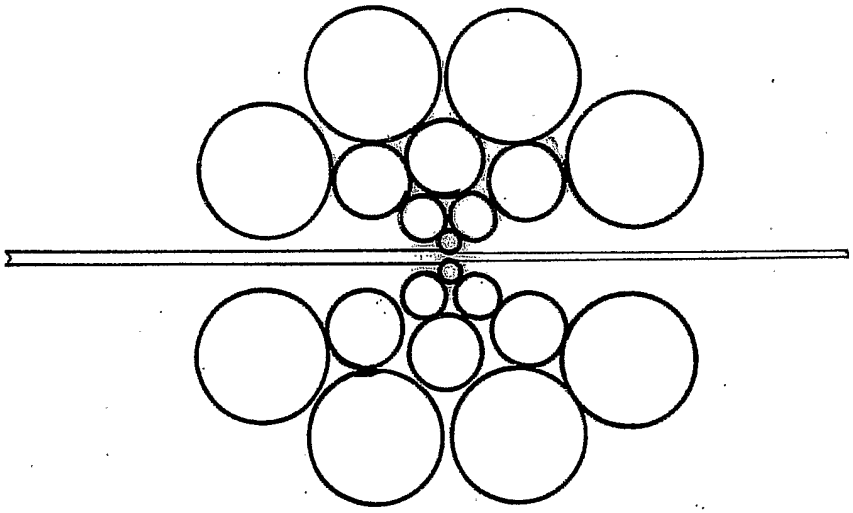

Fig. 8

INTERNATIONAL SEARCH REPORT

In ional Application No
PCT/EP 01/09087

A. CLASSIFICATION OF SUBJECT MATTER
IPC 7 A21C13/02 //B29C43/24,B29C43/46,D21G1/00

According to International Patent Classification (IPC) or to both national classification and IPC

B. FIELDS SEARCHED

Minimum documentation searched (classification system followed by classification symbols)
IPC 7 A21C B29C D21G

Documentation searched other than minimum documentation to the extent that such documents are included in the fields searched

Electronic data base consulted during the international search (name of data base and, where practical, search terms used)
EPO-Internal, WPI Data, PAJ

C. DOCUMENTS CONSIDERED TO BE RELEVANT

Category °	Citation of document, with indication, where appropriate, of the relevant passages	Relevant to claim No.
X	US 4 117 054 A (SALO ESKO) 26 September 1978 (1978-09-26) column 4, line 6 - line 37; figures 4-6	1-9
X	US 5 896 813 A (LEHTO ARI ET AL) 27 April 1999 (1999-04-27) column 2, line 54 -column 3, line 24; figures	1-6
A	US 3 871 808 A (ANCKER FRED H) 18 March 1975 (1975-03-18) column 3, line 1 - line 19; figures	1-9
A	EP 0 589 146 A (PILLSBURY CO) 30 March 1994 (1994-03-30) page 4, line 52 -page 5, line 33; figure 2	1,7

☐ Further documents are listed in the continuation of box C.

☒ Patent family members are listed in annex.

° Special categories of cited documents :

"A" document defining the general state of the art which is not considered to be of particular relevance

"E" earlier document but published on or after the international filing date

"L" document which may throw doubts on priority claim(s) or which is cited to establish the publication date of another citation or other special reason (as specified)

"O" document referring to an oral disclosure, use, exhibition or other means

"P" document published prior to the international filing date but later than the priority date claimed

"T" later document published after the international filing date or priority date and not in conflict with the application but cited to understand the principle or theory underlying the invention

"X" document of particular relevance; the claimed invention cannot be considered novel or cannot be considered to involve an inventive step when the document is taken alone

"Y" document of particular relevance; the claimed invention cannot be considered to involve an inventive step when the document is combined with one or more other such documents, such combination being obvious to a person skilled in the art.

"&" document member of the same patent family

Date of the actual completion of the international search	Date of mailing of the international search report
14 May 2002	03/06/2002

Name and mailing address of the ISA	Authorized officer
European Patent Office, P.B. 5818 Patentlaan 2 NL - 2280 HV Rijswijk Tel. (+31-70) 340-2040, Tx. 31 651 epo nl, Fax: (+31-70) 340-3016	Topalidis, A

INTERNATIONAL SEARCH REPORT

nformation on patent family members

In ional Application No
PCT/EP 01/09087

Patent document cited in search report	Publication date	Patent family member(s)	Publication date
US 4117054 A	26-09-1978	FI 760841 A	01-10-1977
		AT 365973 B	25-02-1982
		AT 173877 A	15-07-1981
		AU 512863 B2	30-10-1980
		AU 2365377 A	28-09-1978
		BE 852946 A1	18-07-1977
		BR 7702034 A	08-11-1977
		CA 1084145 A1	19-08-1980
		CH 619177 A5	15-09-1980
		DE 2713917 A1	27-10-1977
		DE 2743844 A1	12-04-1979
		DK 138177 A ,B,	01-10-1977
		FR 2346064 A1	28-10-1977
		GB 1573932 A	28-08-1980
		IT 1077377 B	04-05-1985
		JP 52119665 A	07-10-1977
		NL 7703452 A	04-10-1977
		NO 771100 A ,B,	03-10-1977
		NZ 183664 A	19-06-1979
		PT 66355 A ,B	01-04-1977
		SE 424288 B	12-07-1982
		SE 7703396 A	01-10-1977
US 5896813 A	27-04-1999	FI 95940 B	29-12-1995
		CA 2169012 A1	21-12-1995
		EP 0714466 A1	05-06-1996
		WO 9534714 A1	21-12-1995
		JP 9505366 T	27-05-1997
US 3871808 A	18-03-1975	DE 1753900 A1	14-04-1977
		DE 1629809 A1	28-01-1971
		GB 1127743 A	18-09-1968
		JP 49000339 B	07-01-1974
EP 0589146 A	30-03-1994	US 5209939 A	11-05-1993
		CA 2096089 A1	26-03-1994
		DE 69320281 D1	17-09-1998
		DE 69320281 T2	17-12-1998
		EP 0589146 A1	30-03-1994
		HK 1009921 A1	20-04-2000