Oct. 21, 1941. V. G. POLITSCH ET AL 2,259,777

APPARATUS FOR DEPOSITING SULPHUR PELLETS IN GLASS CONTAINERS

Filed June 19, 1940 3 Sheets-Sheet 1

Fig. 1.

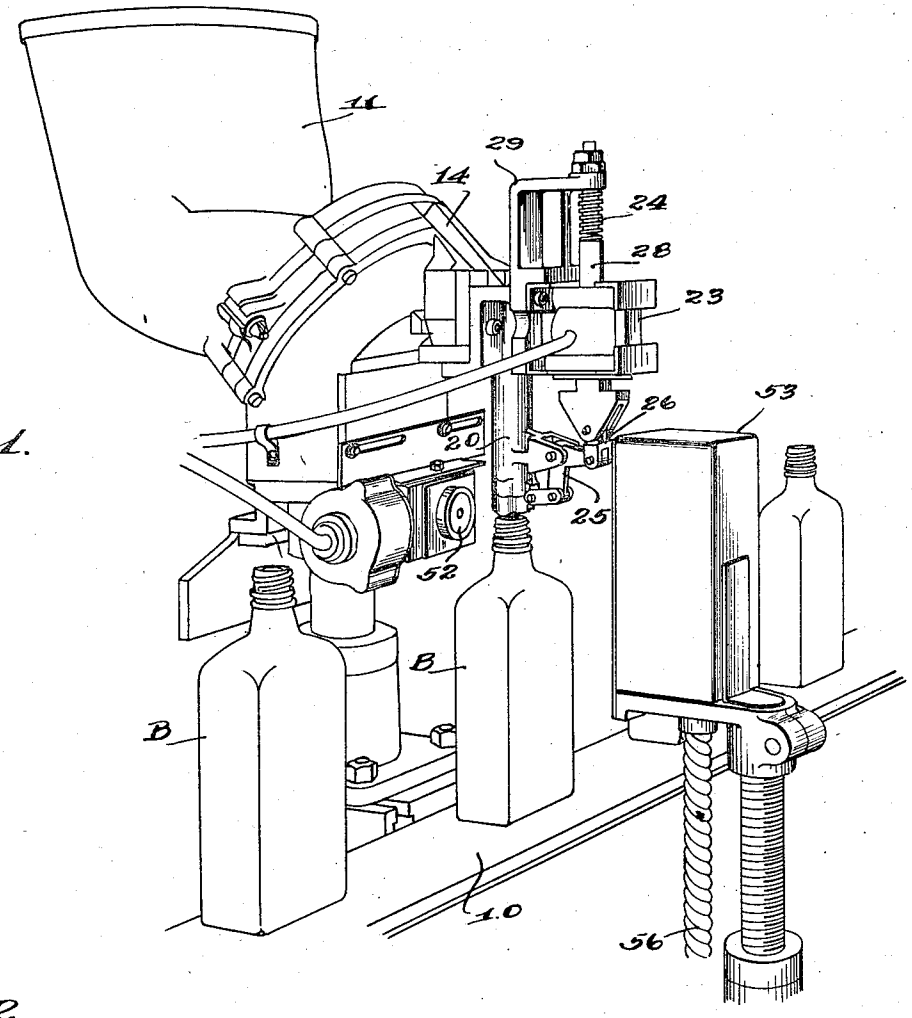

Fig. 2.

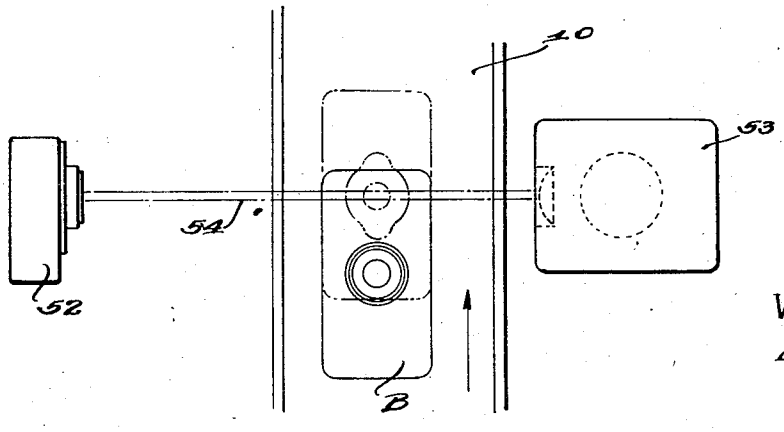

V. G. Politsch
A. G. Lauck
INVENTORS

BY Rule & Hoge
ATTORNEYS

Oct. 21, 1941. V. G. POLITSCH ET AL 2,259,777

APPARATUS FOR DEPOSITING SULPHUR PELLETS IN GLASS CONTAINERS

Filed June 19, 1940 3 Sheets-Sheet 2

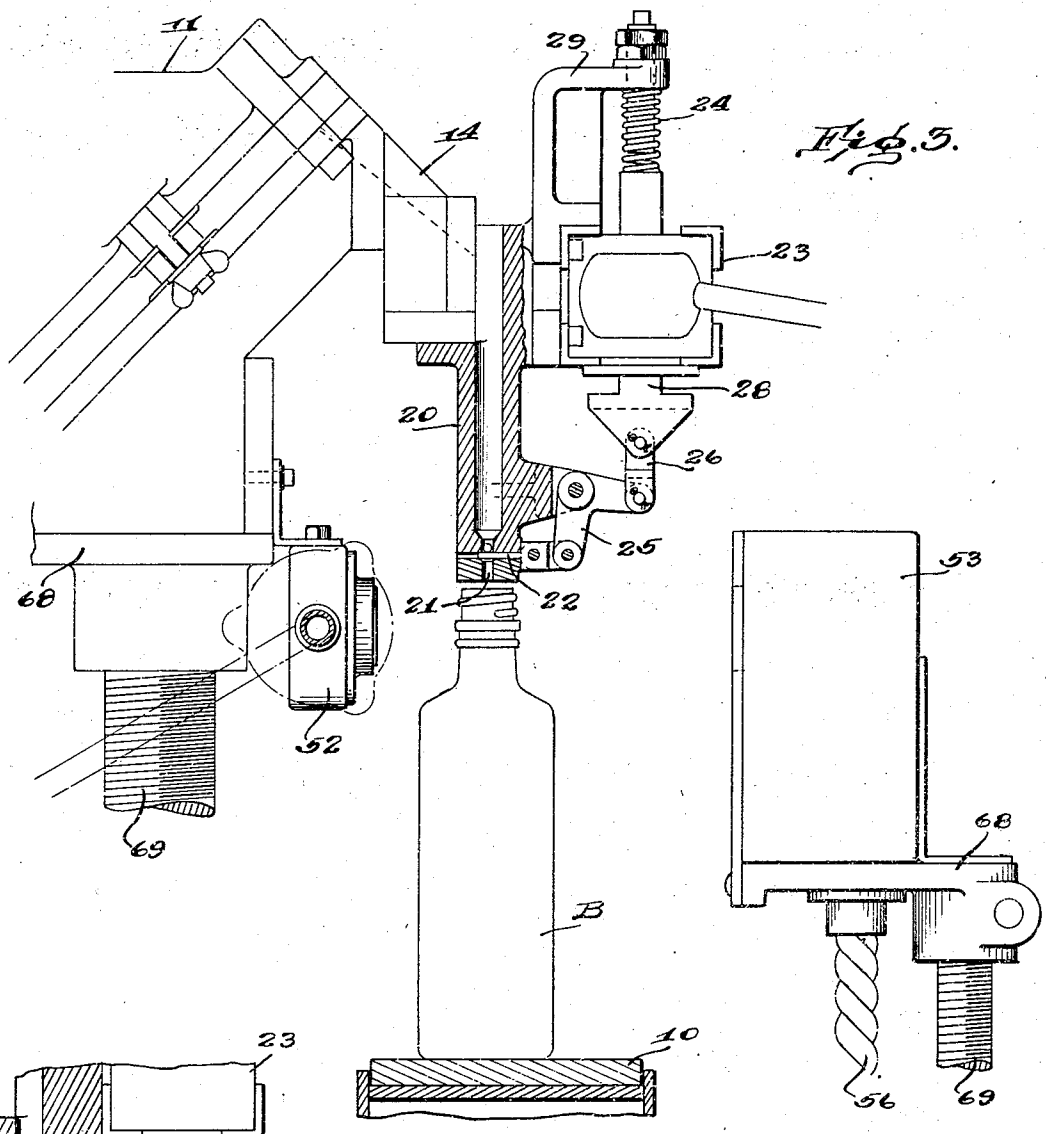

Fig. 3.

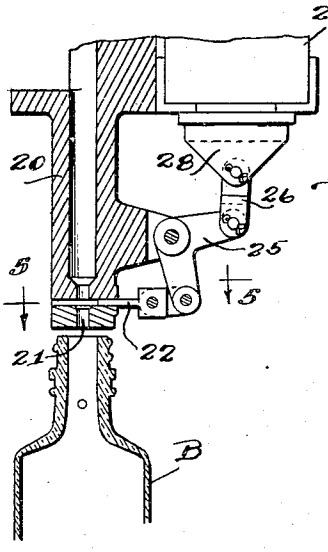

Fig. 4.

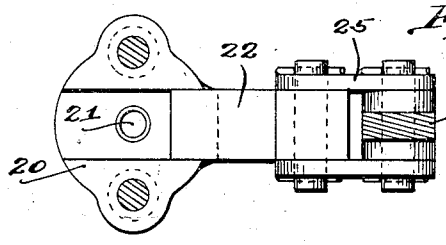

Fig. 5.

V. G. Politsch
A. G. Lauck
INVENTORS

BY Rule & Hoge
ATTORNEYS

Oct. 21, 1941. V. G. POLITSCH ET AL 2,259,777

APPARATUS FOR DEPOSITING SULPHUR PELLETS IN GLASS CONTAINERS

Filed June 19, 1940 3 Sheets-Sheet 3

Fig. 6.

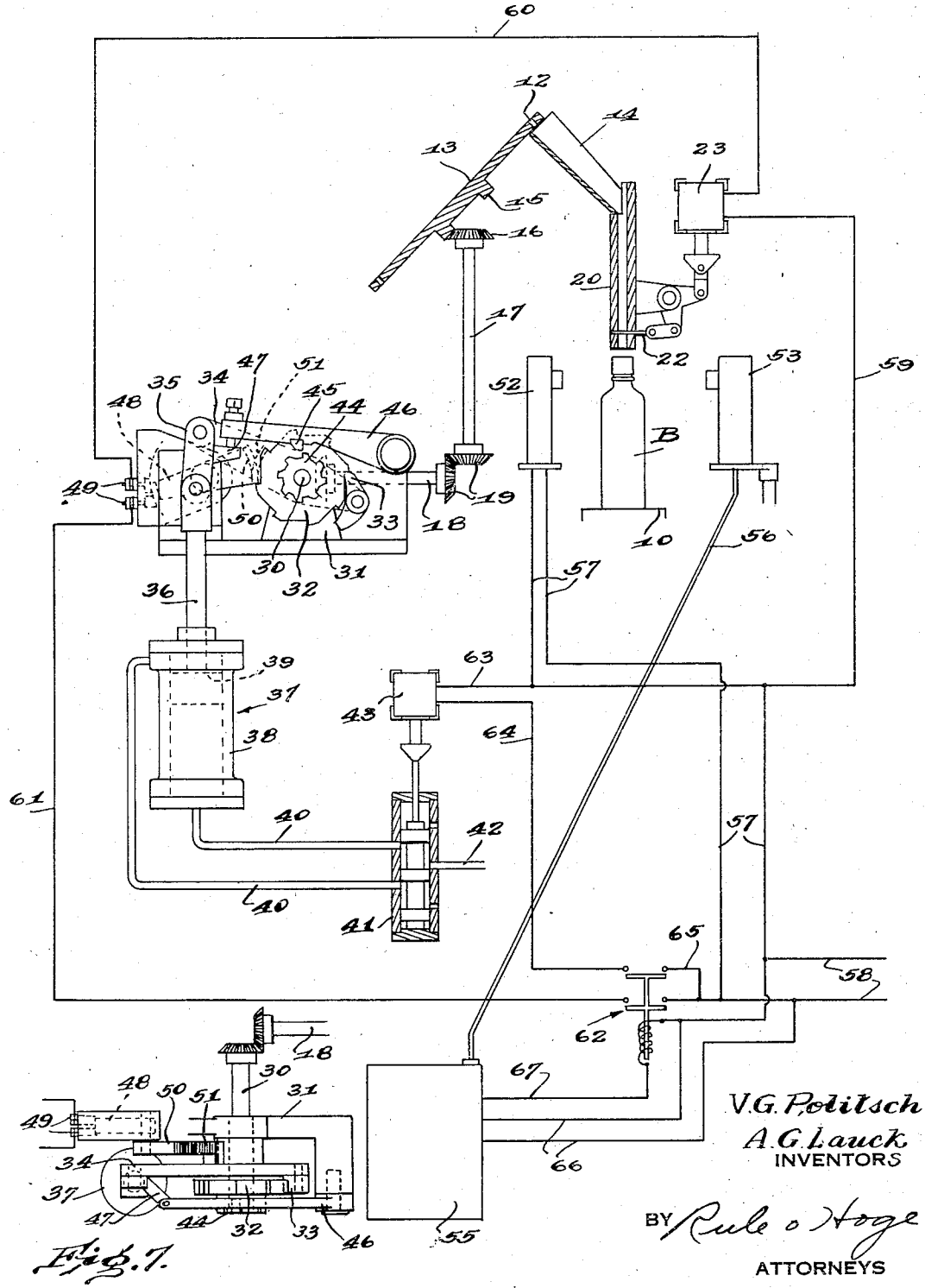

Fig. 7.

V. G. Politsch
A. G. Lauck
INVENTORS

BY Rule & Hoge
ATTORNEYS

Patented Oct. 21, 1941

2,259,777

UNITED STATES PATENT OFFICE

2,259,777

APPARATUS FOR DEPOSITING SULPHUR PELLETS IN GLASS CONTAINERS

Verney G. Politsch and Albert G. Lauck, Alton, Ill., assignors to Owens-Illinois Glass Company, a corporation of Ohio

Application June 19, 1940, Serial No. 341,360

8 Claims. (Cl. 226—2)

The present invention relates to improvements in apparatus for depositing pellets of sulphur or like material in bottles and other glass containers, whereby to neutralize the alkali at and immediately beneath the interior surface thereof.

An object of our invention is the provision of novel means operable in response to arrival of articles at a predetermined station for depositing a pellet in a container and immediately thereafter, placing a second pellet in position for discharge into the next succeeding container.

A further object of our invention is the provision of an apparatus of the above character wherein movement of the containers, or other articles, to the station, actuates a photoelectric cell unit which in turn operates mechanism for discharging a pellet into a container and places another pellet in position to be discharged into the next succeeding article.

Other objects will be in part apparent and in part pointed out hereinafter.

In the drawings:

Fig. 1 is a fragmentary perspective view of the pellet container, dispenser and a portion of the photoelectric cell unit.

Fig. 2 is a fragmentary plan view of the conveyor and a portion of the photoelectric cell unit.

Fig. 3 is a vertical transverse sectional view with parts in elevation of the mechanism shown in Fig. 1.

Fig. 4 is a detail vertical sectional view of the dispenser and control valve therefor.

Fig. 5 is a sectional plan view taken substantially along the line 5—5 of Fig. 4.

Fig. 6 is a view illustrating the electrical system and its connection to the dispenser.

Fig. 7 is a fragmentary plan view of the mechanism for indexing the pellet feeder.

Briefly, the invention comprises a photoelectric cell unit arranged to project a beam of light transversely of and above a horizontal machine conveyor which transfers bottles, jars, glass block sections or the like from a forming machine to an annealing leer. This photoelectric cell unit is operatively connected to a pellet dispenser which is positioned above the conveyor and to a supply hopper from which pellets are discharged one at a time and fed into the aforementioned dispenser. Interruption of the light beam incident to arrival of an article at a pellet discharging station causes operation of the photoelectric cell device which in turn effects discharge of a pellet from the dispenser into the bottle, or other article, which has broken the beam of light and immediately thereafter, causes the delivery of another pellet to said dispenser from the supply hopper or feeder.

In the illustrated embodiment of our invention it is shown in conjunction with a horizontal machine conveyor 10, which, as stated heretofore, transfers bottles B or other glass articles, from a forming machine (not shown) to an annealing leer (not shown). The conveyor is of conventional form and moves continously. Sulphur pellets are stored in a hopper 11 and are discharged therefrom at regular time intervals through ports 12 in a disk 13, the latter being mounted for intermittent rotation about an inclined axis to thereby bring these ports 12 one at a time into register with the upper end of a discharge chute 14. The rotary disk 13 (Fig. 6) is driven by mechanism including a ring gear 15 which runs in mesh with a bevel pinion 16 at the upper end of a vertical shaft 17, the lower end of which and a horizontal shaft 18 are operatively connected by meshing gears 19. The shaft 18 is rotated intermittently by a mechanism which will be described hereinafter. The feeder and mechanism described above are conventional and may be purchased in the open market.

The inclined chute 14 referred to above is connected at its lower end to the upper end of a vertical dispensing tube 20 (Fig. 3). The lower end portion of this tube (Figs. 3 and 4) is formed with a reduced axial passageway 21 or discharge opening, and this opening is normally closed by means of a slide valve 22 which is actuated by mechanism including a solenoid 23 and a coil spring device 24. The solenoid operates to open the valve and the coil spring device functions automatically to close it. The specific construction (Figs. 1, 3, and 4) may well include a bell crank lever 25 connecting the outer end of the valve 22 and a link 26, the latter in turn being pivoted to the lower end of the core 28 or armature of the solenoid. The upper end of this core or armature supports the lower end of the coil expansion spring 24 which is confined between said end and a bracket 29, the latter being attached to the upper end of the dispensing tube 20 and at least in part supporting the aforementioned solenoid 23. The solenoid when energized, moves the core, or armature, upwardly and effects momentary retraction of the valve 22 so that a pellet may be discharged from the tube into a bottle. Immediately thereafter the solenoid is de-energized and the coil spring 24 functions to move the core or armature downwardly and thereby again close the valve 22.

The mechanism for imparting intermittent rotation to the aforementioned shafts 17 and 18 whereby to similarly move the disk 13 of the pellet feeder, includes a main drive shaft 30 (Figs. 6 and 7) mounted in bearings 31. One end of this shaft has driving connection with the aforementioned shaft 18. The other end carries a ratchet 32 which is engaged with a pawl 33 at one end of a lever 34 or rocker arm. This lever is mounted for oscillation about the axis of said shaft 30 and at the end opposite the pawl 33, is connected through a link 35 to the upper end of a piston 36 which forms part of an air operated piston motor 37.

This motor includes a cylinder 38 and a piston 39 therein which is connected to the aforementioned piston rod 36. Air under pressure is admitted to the opposite ends of the cylinder in alternation by way of branch pipes 40 which are connected to a spool valve 41. Air under pressure is supplied to this valve from a main supply pipe 42. This spool valve is operated at regular time intervals by means of a solenoid 43 which includes a coil spring device (not shown) for moving the valve in the direction opposite that in which it is moved by the solenoid. The structure of the solenoid and spring device may well be identical to that described heretofore and illustrated in Fig. 3.

A ratchet 44 and pawl 45, the latter carried by a lever 46, operate to secure the shaft 38 against accidental movement during the intervals between indexing of the disk 13. This lever 46 has its free end positioned in the path of movement of a finger 47 which is carried by the aforementioned link 35. Thus, movement of the piston rod 36 downwardly a predetermined distance, rotates the two ratchets 32 and 44 a distance representing the number of degrees between the annular series of spaced ports 12 and effects proper engagement between said ratchets and the pawls 33 and 45 associated therewith so that the discharge ports 12 always are brought into accurate alignment with the upper end of the chute 14.

Actuating mechanism for the pellet feeder also includes a switch arm 48 which normally closes an electrical circuit by connecting two spaced contacts 49 which are included in the circuit for the solenoid 23 referred to heretofore. This switch arm 48 is mounted for oscillation about a horizontal axis and at one end is provided with a sector gear 50 which meshes with another sector gear 51, the latter being carried by the aforementioned lever 34 which has direct connection to the piston motor 37. The function of this particular mechanism will become apparent incident to reading the following description of the photoelectric cell unit which controls and times the operation of the pellet feeder and dispenser.

This latter mechanism to a large extent, includes conventional structure. A light source 52 is arranged at one side of the horizontal conveyor 10 and a conventional photo-electric cell 53 is placed directly across the conveyor from said light source so that the beam of light 54 extends transversely of the length of the conveyor, above the latter and in the normal path of travel of the neck portion of the bottles B. A conventional photoelectric control unit 55 is directly connected to the photoelectric cell 53 by means of a cable 56. Conductors 57 connect the light source 52 with electric current supply lines 58. Thus, the light source is continuously operated and directs a beam of light in the direction of the photoelectric cell 53.

The solenoid 23 which actuates the aforementioned valve 22, is electrically connected to the source of electric current supply by means of a wire 59 which is attached to one side of the circuit 57 for the light source 52. The other side of the circuit for this solenoid 23 consists of a conductor 60 which is connected to one of the contacts 49 (Fig. 6) and a second conductor 61 which connects the other contact 49 and a relay 62. The solenoid 43 which actuates the spool valve 41, is connected by a wire 63 to one side of the aforementioned circuit 57 and additionally includes a wire 64 which leads to the relay 62. Through the relay this latter wire 64 may be connected to the source of supply of electric current by means of a wire 65.

The aforementioned photoelectric control unit 55 is connected to the source of electric current supply 58 by means of a pair of conductors 66 and through one of said conductors 66 and a third wire 67, said device is operatively connected to the relay 62. Thus, with operation of the photoelectric control device in response to actuation of the photoelectric cell incident to breaking off the light beam, the relay 62 is operated to close the circuits to both of the solenoids 23 and 43. This results in energization of the solenoids and immediate opening of the valve 22 to permit the discharge of a pellet into the bottle or other article which is in register with the dispensing tube 20. Coincident with this operation, the other solenoid 43, operates the spool valve 41 to effect the introduction of air under pressure to the upper end of the piston motor 37. The piston 39 is moved downwardly and through the piston rod 36, lever 34, and pawl and ratchet mechanism imparts a slight rotary motion to the shaft 38 which in turn indexes the disk 13 to bring the next succeeding port 12 into register with the chute 14. Simultaneously with such indexing of the disk 13, the switch arm 48 (Fig. 6) is moved to break the circuit through the solenoid 23 which is associated with the pellet dispenser. Thus, the spring 24 is free to close the valve 22 just in advance of the delivery of the next pellet to the dispensing tube 20. By the time these steps have been taken, the bottles or other articles will have passed the pellet dispensing station, or treating station, so that the light beam will again be directed against the photoelectric cell 53 and through the latter and the photoelectric control device 55, bring about a return of the relay 62 to its inoperative position.

In order that the apparatus may be capable of use with bottles and other articles of different height, the pellet dispenser and feeder, together with the light source 52 and the photoelectric cell 53, are mounted upon brackets 68, which in turn are carried by vertically adjustable screws 69. Thus, adjustment of the apparatus may be obtained to compensate for variations in the height of the articles as stated heretofore.

Modifications may be resorted to within the spirit and scope of the appended claims.

We claim:

1. In combination, a horizontal conveyor for carrying articles having an open upper end past a predetermined station, a dispensing tube having its discharge end positioned above the conveyor at said station, a valve normally closing the discharge end of said tube, a feeder operable to deliver pellets one at a time to the tube, a photo-

electric cell unit positioned to be actuated by an article placed in alignment with the tube and mechanisms operable by actuation of said unit for opening said valve momentarily and immediately thereafter actuating the feeder.

2. In apparatus of the character described, a horizontal conveyor, a photoelectric cell unit including a light source and photoelectric cell arranged at opposite sides of said conveyor for cooperation with each other, a photoelectric control device connected to said cell, a relay operable by said device in response to actuation of the cell, a pellet dispensing tube having its lower discharge end positioned over the conveyor between the light source and cell, mechanism controlled by said relay for releasing pellets one at a time from the tube, a pellet feeder above said tube, and mechanism controlled by said relay for effecting the transfer of pellets from the feeder to said tube one a time.

3. In apparatus of the character described, a horizontal conveyor, a photoelectric cell unit including a light source and photoelectric cell arranged at opposite sides of said conveyor for cooperation with each other, a photoelectric control device connected to said cell, a relay operable by said device in response to actuation of the cell, a pellet dispensing tube having its lower discharge end positioned over the conveyor between the light source and cell, mechanism controlled by said relay for releasing pellets one at a time from the tube, a pellet feeder above said tube, and mechanism controlled by said relay for effecting the transfer of pellets from the feeder to said tube one at a time, said last named mechanism including means for closing the dispensing tube prior to delivery of a pellet thereto.

4. In apparatus of the character described, a horizontal conveyor, a photoelectric cell unit including a light source and photoelectric cell arranged at opposite sides of said conveyor for cooperation with each other, a photoelectric control device connected to said cell, a relay operable by said device in response to actuation of the cell, a pellet dispensing tube having its lower discharge end positioned over the conveyor between the light source and cell, a solenoid valve operable by actuation of the relay for releasing a pellet from the tube, a pellet feeder above said tube, mechanism for effecting transfer of pellets one at a time to said tube, said mechanism including an air operated piston motor, a solenoid valve for controlling operation of said motor, and electrical connection between the relay and the last named solenoid.

5. In apparatus of the character described, a horizontal conveyor, a photoelectric cell unit including a light source and photoelectric cell arranged at opposite sides of said conveyor for cooperation with each other, a photoelectric control device connected to said cell, a relay operable by said device in response to actuation of the cell, a pellet dispensing tube having its lower discharge end positioned over the conveyor between the light source and cell, a solenoid valve operable by actuation of the relay for releasing a pellet from the tube, a pellet feeder above said tube, mechanism for effecting transfer of pellets one at a time to said tube, said mechanism including an air operated piston motor, a solenoid valve for controlling operation of said motor, electrical connection between the relay and the last named solenoid, and a switch device included in said mechanism for effecting closing of the valve in said tube prior to transfer of a pellet thereto.

6. In apparatus of the character described, a vertical pellet dispensing tube, a gate valve at the lower end of the tube, spring means normally yieldingly holding the valve closed, a solenoid connected to the valve for opening it at intervals, a pellet feeder, electrically controlled mechanism for effecting transfer of pellets one at a time from said feeder to the tube, a piston motor constituting a part of said mechanism, a solenoid valve controlling operation of said motor, and a relay controlling operation of both solenoids.

7. In apparatus of the character described, a vertical pellet dispensing tube, a gate valve at the lower end of the tube, spring means normally yieldingly holding the valve closed, a solenoid connected to the valve for opening it at intervals, a pellet feeder, electrically controlled mechanism for effecting transfer of pellets one at a time from said feeder to the tube, a piston motor constituting a part of said mechanism, a solenoid valve controlling operation of said motor, a relay controlling operation of both solenoids, and an electric switch operable by said piston motor to de-energize the first named solenoid in advance of de-energization of the other solenoid.

8. In apparatus of the character described, a vertical pellet dispensing tube, a gate valve at the lower end of the tube, spring means normally yieldingly holding the valve closed, a solenoid connected to the valve for opening it at intervals, a pellet feeder, electrically controlled mechanism for effecting transfer of pellets one at a time from said feeder to the tube, a piston motor constituting a part of said mechanism, a solenoid valve controlling operation of said motor, a relay controlling operation of both solenoids, and means operable by said piston motor for periodically securing the mechanism against operation.

VERNEY G. POLITSCH.
ALBERT G. LAUCK.