AUSTRALIA 669178

Section 29 (1)
Regulation 3.1 (2)

Patents Act 1990

NOTICE OF ENTITLEMENT

We, TEKNION FURNITURE SYSTEMS, of 560 Supertest Road, Downsview, Ontario M3J 2M6, Canada, being the applicant in respect of Application No. 42577/93 state the following:-

The Person nominated for the grant of the patent has entitlement from the actual inventors by assignment.

The person nominated for the grant of the patent has entitlement from the applicants of the application listed in the declaration under Article 8 of the PCT by assignment.

The basic application listed on the request form is the first application made in a Convention country in respect of the invention.

By our Patent Attorneys,
WATERMARK PATENT & TRADEMARK ATTORNEYS

E.M. CHIN QUAN
REG. PAT. ATTORNEY

Stephen K. Plymin

Registered Patent Attorney

20th March, 1996

AU9342577

(12) PATENT ABRIDGMENT (11) Document No. AU-B-42577/93
(19) AUSTRALIAN PATENT OFFICE (10) Acceptance No. 669178

(54) Title
DESKING SYSTEM

International Patent Classification(s)
(51)[5] **A47B 083/00** **A47B 013/00** **A47B 021/00** **A47B 087/00**
E04B 002/74

(21) Application No. : **42577/93** (22) Application Date : **04.05.93**

(87) PCT Publication Number : **WO93/21799**

(30) Priority Data

(31) Number	(32) Date	(33) Country
878218	**04.05.92**	**US UNITED STATES OF AMERICA**

(43) Publication Date : **29.11.93**

(44) Publication Date of Accepted Application : **30.05.96**

(71) Applicant(s)
TEKNION FURNITURE SYSTEMS

(72) Inventor(s)
JOHN HELLWIG; DAVID MCLEAN STEVENSON; LORIE MARANGONI

(74) Attorney or Agent
WATERMARK PATENT & TRADEMARK ATTORNEYS , Locked Bag 5, HAWTHORN VIC 3122

(56) Prior Art Documents
EP 458264
EP 479331
EP 62920

(57) Claim

1. A system for subdividing office space into a plurality of work stations, some of said work stations being defined by means of office panels supporting work surfaces to at least one side thereof, and some of said work stations being defined by a desking arrangement having work surfaces supported independent of said office panels; wherein said office panels each include a frame with at least one intermediate horizontal securing channel extending across said panel and forming a securing structure running the length thereof and exposed at a multiplicity of locations distributed along said securing channel; said horizontal securing channels cooperating with and supporting vertical support members of said work surfaces supported from said panels, said vertical support members engaging said horizontal securing channels at any of said multiplicity of locations therealong; and wherein at least one of said workstations is defined by work surfaces supported by the combined office panels and said desking arrangement where the work surfaces thereof are joined at a transition position intermediate the length of a panel where one end

.../2

of a work surface adjacent said transition position is supported from one of said panels intermediate the length of the supporting panel; said office panels and said desking system cooperating such that transition positions can occur at any of a host of positions intermediate the length of a panel.

OPI DATE 29/11/93 APPLN. ID 42577/93
AOJP DATE 10/02/94 PCT NUMBER PCT/CA93/00184

AU9342577

INTERNATIONAL APPLICATION PUBLISHED UNDER THE PATENT COOPERATION TREATY (PCT)

(51) International Patent Classification 5 :
A47B 83/00, 21/00, 13/00
E04B 2/74

A1

(11) International Publication Number: WO 93/21799

(43) International Publication Date: 11 November 1993 (11.11.93)

(21) International Application Number: PCT/CA93/00184

(22) International Filing Date: 4 May 1993 (04.05.93)

(30) Priority data:
07/878,218 4 May 1992 (04.05.92) US

(71) Applicant: TEKNION FURNITURE SYSTEMS [CA/CA]; 560 Supertest Road, Downsview, Ontario M3J 2M6 (CA).

(72) Inventors: HELLWIG, John ; 80 Fuller Avenue, Toronto, Ontario M6R 2C5 (CA). STEVENSON, David, McLean ; P.O. Box 1461, Barrie, Ontario L4M 5R4 (CA). MARANGONI, Lorie ; 179 Verobeach Blvd., Weston, Ontario M9M 1R4 (CA).

(74) Agents: HALL, S., Warren et al.; 133 Richmond Street West, Suite 301, Toronto, Ontario M5H 2L7 (CA).

(81) Designated States: AU, JP, European patent (AT, BE, CH, DE, DK, ES, FR, GB, GR, IE, IT, LU, MC, NL, PT, SE).

Published
With international search report.
Before the expiration of the time limit for amending the claims and to be republished in the event of the receipt of amendments.

669178

(54) Title: DESKING SYSTEM

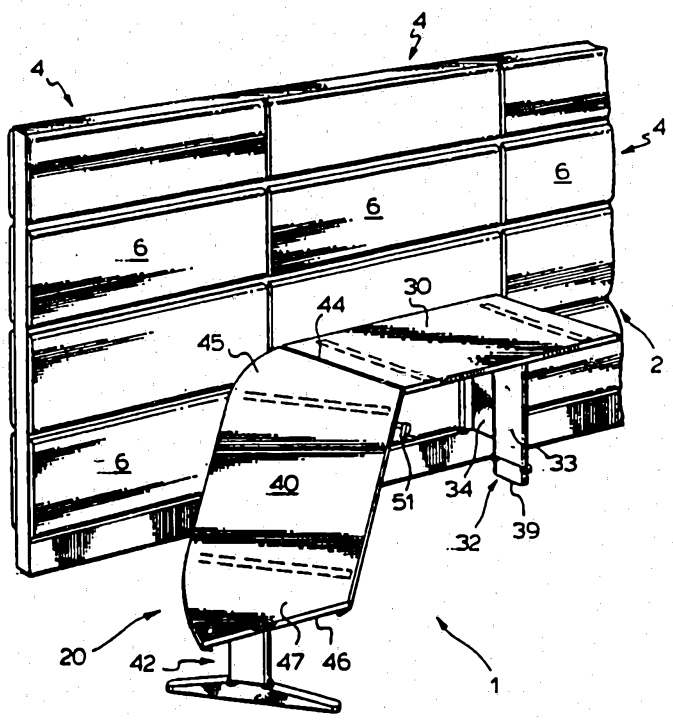

(57) Abstract

The present invention relates to a combined desking (20) and panelling (2) system which provides an effective means for subdividing office space and defining work areas. Work surfaces (30) are provided and can be independently supported or supported by the panelling system. Power and communication wires and cables are distributed through and between the desking and panelling systems.

TITLE: DESKING SYSTEM

FIELD OF THE INVENTION

The present invention relates to office panelling systems and to desking systems. In particular, the invention relates to a combination panelling and desking system.

BACKGROUND OF THE INVENTION

Office panelling systems are now recognized as one of the best approaches for subdividing office space into individual work units or cells due to the flexibility of such systems to be changed to meet changing needs as well as the ability of the system to be dissembled and moved to other sites. Panelling systems now have the capability of conveniently providing high capacity power to particular work stations as well as allowing the distribution of communication wires and the like to work stations.

TEKNION* office panelling systems have gained wide acceptance in the marketplace and the structure of this panelling system is generally shown in United States Patent 4,535,577, which is incorporated herein by reference. This system has individual office panels interconnected, with each office panel having an interior frame which supports decorative or functional cover elements to the exterior of the frame. Various horizontal channels are provided for securing of office accessories, such as work surfaces and overhead bins. This panelling system has gained wide acceptance in the marketplace and provides power at desk height.

Panelling systems which support work surfaces to either side thereof are the most common system in North America, whereas in Europe, the approach has been to provide a desking system which is capable of supporting panels or partitions thereon. These two alternative

*TEKNION - trademark of TEKNION FURNITURE SYSTEMS

approaches each have advantages and disadvantages. For example, in some cases, it is desirable to have a number of work surfaces laid out in a particular arrangement without any panels associated therewith. In other cases, it is desirable to merely subdivide the space without the need for work surfaces. In the first case, a desking system is more desirable, whereas in the second case, a panelling system is more desirable. These systems, because of the different principles involved, operate basically independently of the other type of system. There remains a need to provide a system which addresses the various demands of the marketplace while accommodating the ability to readily alter any work space environment. There also remains a need to provide a system where the storage of additional components is reduced.

A system which includes a frame for a panelling arrangement which also can be combined with a desking arrangement is shown in EP-A-0 458 264. This system does not allow for off panel module points of transition from panelling arrangement to desking arrangement.

SUMMARY OF THE INVENTION

A system for dividing an open area into working arrangements, according to the present invention, comprises a number of interconnected panels supporting work surfaces to the sides thereof and a desking arrangement having as part thereof supported work surfaces. There are work stations defined by the interconnected panels and work stations defined by the desking system. There is also a work station defined by the combined office panels and desking arrangement, with this work station having a work surface with a transition position between the panels and the desk arrangement at a location intermediate the length of a panel. Work surfaces may be supported at any of the host of positions in the length of each panel.

According to yet a further aspect of the invention, the system includes a supply of work surfaces of various

AUSTRALIAN PATENT OFFICE ML

AMENDED SHEET

configurations, with this supply of work surfaces accommodating changes in the work surface configuration of the overall system. With this arrangement, the support structure for supporting the work surfaces either to a panel or the supports for defining work surfaces of the desking arrangement conveniently releasably support the work surfaces, such that the work surfaces are readily interchangeable with other work surfaces, whereby greater flexibility is possible. With this arrangement, only the work surfaces or an extra supply of work surfaces need to be stored as opposed to a complete supply of desks. Furthermore, with this arrangement, the support structure for the work surfaces can be knocked down, thus reducing storage difficulties.

According to another aspect of the invention, a number of the work surfaces include at least one end configuration for at least partially defining a transition in the longitudinal axis of the work surface, which transition occurs between two adjacent work surfaces.

In the past, separate junction members have been used to join two separate work surfaces. It has been found that work surfaces, at least partially defining a transition or fully defining a transition such that the transition is integral with the work surface, simplify the overall system and allow for great flexibility in modifying the layout to meet specialized needs.

A combination office panelling and office desking system, according to the present invention, comprises office panels supporting to one side thereof work surfaces which cooperate with work surfaces of the office desking system to define continuous or interrelated work surfaces at the transition between work surfaces of the panelling system and the desking system, which can be intermediate or off-module relative to the panel length. The panelling system includes means for supporting the work surfaces and the desking system includes means for supporting the work

AUSTRALIAN PATENT OFFICE

AMENDED SHEET

surfaces, with these work surfaces being supported by either the panelling system or the desking system.

BRIEF DESCRIPTION OF THE DRAWINGS

Preferred embodiments of the invention are shown in the drawings, wherein:

Figure 1 is a partial perspective view of the combination office panelling and desking system;

Figure 2 is a partial perspective view showing securement of a working surface to the panelling system;

Figure 3 is a vertical view showing securement of one support member to the frame of an office panelling system;

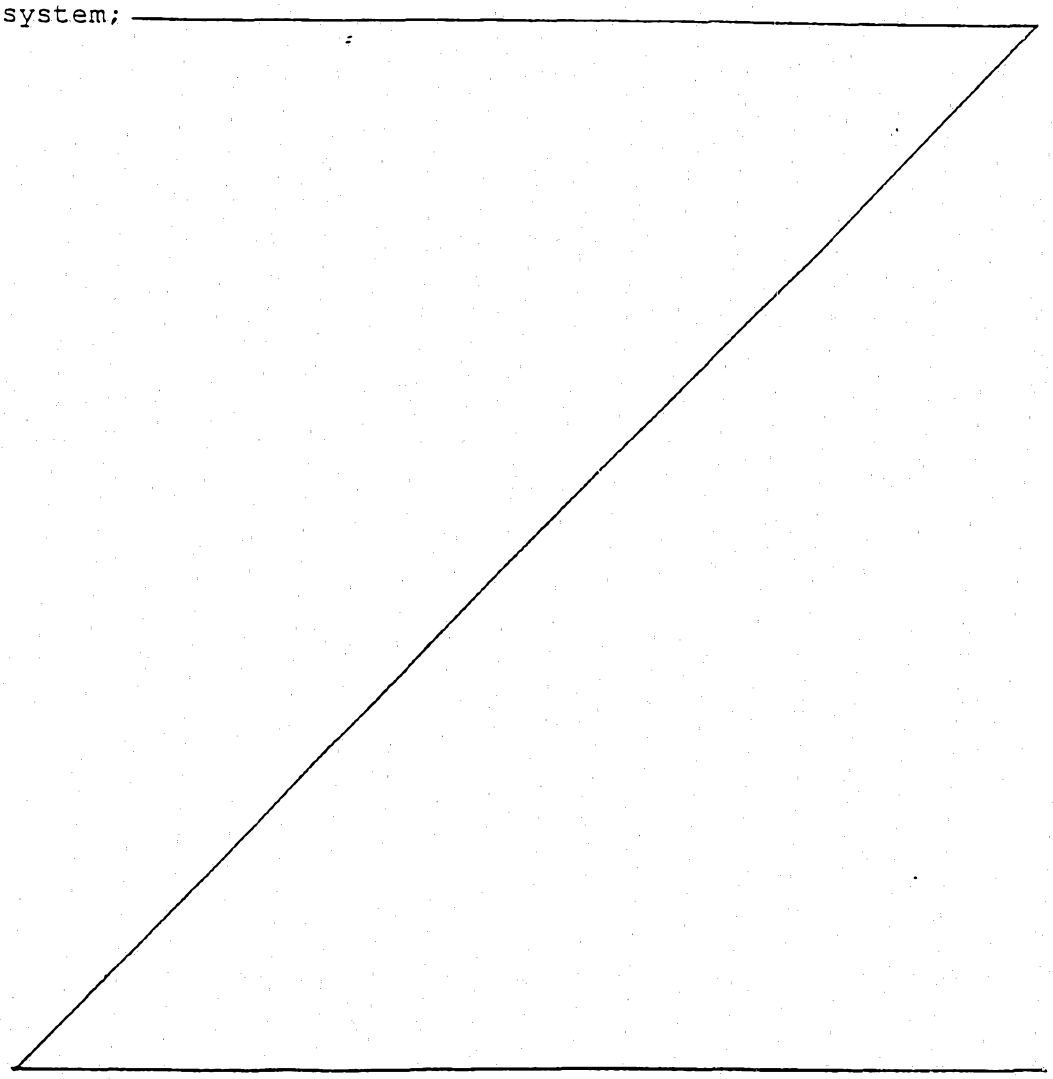

AUSTRALIAN PATENT OFFICE MV

AMENDED SHEET

Figure 4 is a partial perspective view showing one arrangement for securing of a support arrangement to the frame of an office panel;

Figure 5 is a top view showing a combination office panelling and desking system;

Figure 5A is a perspective view showing a floor plate locking the angular relationship of two adjacent feet of the desking system;

Figure 6 is a perspective view showing one support arrangement of the desking system having associated therewith an electrical power feed arrangement;

Figure 7 is a vertical section of one of the support arrangements for the desking system;

Figure 8 is a partial sectional view showing securement of the work surfaces of the support arrangement;

Figure 9 is a rear view of one desk of the desking system;

Figure 10 is a perspective view of a height adjustable monitor support table; and

Figure 11 is a sectional view of the central support of the monitor support table with covers.

DETAILED DESCRIPTION OF THE PREFERRED EMBODIMENTS

The combination office panelling and desking system 1 shown in the drawings comprises an office panelling system, generally shown as 2, made up of individual office panels 4 all interconnected and which interact to support one another. The individual office panels 4 have removable cover or functional elements 6 supported to one side of a panel frame 8. Securing channels 10, shown in Figure 3, are accessible at the horizontal junction between stacked cover or functional elements 6.

The desking system is generally shown as 20 and is the portion of the system which is supported independently of the panelling system 2. Work surface 40 is directly supported by the desking system 20 by means of support arrangements 42. The ends 44 and 46 of the work surface 40

have as part thereof transition segments 45 and 47. These transition segments accommodate a change in direction of the longitudinal axis of the work surfaces 30 and 40.

Work surface 30 is supported by the panelling system and the support arrangement 32 which is connected directly to a panel 4. Each support arrangement 32 engages a panel and also includes a support surface 39 engaging the floor. The support arrangement 32 includes legs 33, rearwardly extending connecting sections 34, a panel engaging bracket 36 at the top and bottom of the rearwardly extending connection section 34, with each panel engaging bracket 36 having a hook 37 and a rotatable cam 38 pivotted atop the bracket around a pivot pin 39. As shown in Figure 3, the bracket 36 has its hook received within the channel 10 of a frame with the channel having a lower lip 12. The hook is thus trapped behind the lower lip by means of the cam 38 which is rotated and forced into engagement with the top surface of the channel 10 or the rear surface of the channel 10. The hook 37 becomes trapped within the channel and, thus, positively engages the support arrangement 32 with the channels 10 of the panels 4. These support arrangements 32 with the cam in a release position, are free to slide along the length of the channel and be at any place along the length of the channel. This provides great freedom with respect to the use of these support structures and allows appropriate placement of these support arrangements 32 in accordance with the particular legs of the work surface being supported. Details of this engagement and of the support arrangement 32 are shown in Figures 2, 3 and 4.

The combined office panelling and desking system is partially shown in Figure 5 where it can be seen that the panelling system 2 is extending in a generally straight line defined by the individual connected panels 4 and have associated therewith a work surface 30 supported from the panels 4. Work surface 30 includes a transition section 31 which mates with the work surface 40 adjacent thereto.

Work surface 40 is supported by the desking system and the individual legs shown in dotted lines and running from adjacent the front edge of work surface 40 to the back edge of work surface 40. Work surface 40a includes a transition segment 41 which cooperates with surface 40 to provide a further change in direction of the longitudinal axis of the work surface defined collectively by work surface 30, work surface 40 and work surface 40a. It should be noted that the transitional segments 31 and 41 are integral with the respective work surfaces. Thus, it can be seen that a smooth transition has been provided between the work surfaces supported from the panel and a separate section where the work surface is supported by the desking system 20 defined by the two abutting work surfaces. In the lower righthand portion of the Figure, a separate desk supporting work surface 40b has been provided. Thus, it can be seen that the desking system can support individual working surfaces, such as 40b, or it can cooperate and support other work surfaces 40 and 40a. The segments 35 associated with work surface 30 are supports attached at the top of legs 33 and preferably releasably engage rails on the underside of the work surface.

A raised pedestal work surface 40c is shown and details of that support arrangement are illustrated in Figure 10.

The desking system includes a foot bracket 45 shown in Figure 5A which engages the each foot 66 of adjacent leg supports 42 whereby adjacent feet of support legs can be mechanically fixed. Various different floor plates can be provided for different angular relationships. These floor plates also simplify initial installation. This serves to retain the abutting relationship of adjacent work surfaces whereby the work surfaces are not directly connected one to the others. The connecting conduit 90 mechanically interconnects the structure of the lower support legs, providing a further mechanical connection retaining the predetermined relationship. In this way, adjacent legs of

the desking system are mechanically engaged at two vertical positions while allowing the height of adjacent work surfaces to be independently varied.

With the arrangement the work surfaces need not be the same level and can be independently adjusted in height as may be required for particular function.

Each desk unit includes a beam assembly 70 which forms a modesty panel. Connecting conduits 90 form an extension of the modesty panel and mechanically connect one such modesty panel to an adjacent modesty panel or an office panel. Further details are shown in Figure 6.

One unit of the desking system 20 is shown in Figure 6. Leg members 42 are positioned to either side of the work surface 40 and comprise a lower telescopic leg section 60 and upper telescopic leg section 62. The upper telescopic leg section supports a work surface engaging member 64 and preferably releasably engages a work surface in the manner shown in Figures 7 and 8. The lower telescopic leg sections 60 are interconnected by a connecting beam assembly 70. The beam assembly 70 includes a hinged front panel 72, a lower connecting member 74, a horizontal intermediate connecting member 76 and an upper horizontal connecting member 78. Member 76 accommodates the power feed 80 as it passes through the desking system, with horizontal connecting member 78 accommodating power outlet receptacles 82. Horizontal connecting member 74 would typically accept communication type wires which are normally spaced from the power electrical feed 80.

The hinged front panel 72 is notched in the center thereof to partially expose power receptacle 82 and allow convenient access thereto. The front panel is hinged downwardly as shown in Figure 6 for laying in of armoured cable and communication wiring.

A power feed 84 for office or other equipment is shown in Figure 6 connected to the power outlet receptacle 82. The user can easily make this connection by lowering panel 72, exposing receptacle 82. The connecting beam 70

also includes a hinged back panel 86. It can be seen that when the front panel 72 is in a vertical or closed position, such as shown in Figure 7, the front panel hides the structural features of the connecting beam assembly and the various power feeds that run therethrough or electrical connections made therein. The power feed 80 is introduced to the beam assembly adjacent the lower edge thereof and the various components allow for the feeding of cables without stringing through the system. A number of slots are provided where the horizontal connecting members join with the lower telescopic sections to accommodate the transition of electrical power and communication cables behind lower telescopic leg section 60. In some cases, it may be desirable to introduce the feed between cooperating lower telescopic sections, which is also possible and the beam assembly can have feed ports or slots appropriately spaced for feeding of wires and the like interior of the connecting beam assembly 70. The lower telescopic leg section 60 includes a removable cover arrangement 61 through which a power feed can enter the interior of the leg and gain access to the beam assembly 70. Also shown in Figure 6 is a connecting conduit 90 which runs between adjacent lower telescopic leg sections and by means of which the power feed 80 is concealed.

The intermediate connecting member 76 has notches 77 at either end thereof creating a gap between the lower telescopic leg section 61 and the ends of the intermediate member 76. These gaps allow cables and armoured cable to pass therethrough to enter, leave or vary levels within the beam assembly. Such wires, cables, armoured cable and the like may be laid in the appropriate channel or tray from behind the beam assembly without threading through ports thus simplifying installation. Even concealment of cables by passing upward behind the removable arms of the lower telescopic leg sections without threading as the covers are removable. Similarly connecting conduit 90 can have a

longitudinal open section through which wires, cables and the like may pass and lay therein.

The rear panel 86 can hinge open as indicated in Figure 7 to provide improved access to the beam assembly from behind which is useful in laying in of cables, wires and the like to the desking system. With this arrangement the height of the work surface can be changed while the height of the beam assembly remains fixed. This is also true of the connecting conduit and overcomes problems where trays or channels are directly connected to the work surfaces.

The component of the desking system shown in Figures 6 and 7 is hydraulically adjustable in height and the user can easily adjust the height of the work surface 40 for his particular needs or the particular function being carried out. Adjustment is carried out by operating crank handle 51 (Figure 1) which in turn adjusts hydraulic cylinders associated with the telescopic leg sections, as generally shown in Figure 10.

The work surface 40 is preferably held in engagement with the work surface engaging members 64 by a spring detente arrangement, generally shown as 100. This spring detente includes a movable piston 101 which is spring biased and engages an engaging rib 102 on the lower surface of the work surface. This has been found to provide positive securement of the work surface to the support arrangement, while also allowing the user to conveniently remove the work surface without requiring any specialized tools. In most cases, a strong upward pull on the work surface will result in disengagement when piston 101 includes a camming surface to cause disengagement of the piston as the work surface is urged upwardly. With this arrangement, the work surface may be reversed, if desired, to define the opposite transition or a new work surface may be secured.

The engaging ribs 102 provided at either edge or close to the edge of the work surfaces 40 can also be used

to receive accessories, such as the hydraulic adjustment arrangement 106 shown in Figure 10. This hydraulic adjustment arrangement also includes a spring detente arrangement 102 at either end thereof which can be used for securing of this adjustment arrangement beneath the work support surface. The hydraulic adjustment arrangement 106 includes a hydraulic fluid tube 108 connected to the hydraulic cylinder 110 having displaceable piston 112. The hydraulic cylinder and piston are connected between telescopic leg sections of the central support of work surface 40c. With this arrangement, the inner telescopic section 114 of the leg arrangement 113 telescopes within the lower telescopic section 116. Lower telescopic section 116 is secured by bracket member 118 to the base 120. The hydraulic adjustment arrangement 106 may be secured to the work surface 40, shown in Figure 5, and allows the user to adjust the height of the work surface 40c when operating the hydraulic adjustment arrangement 106 secured beneath work surface 40. This is particularly useful with respect to a monitor stand which can be positioned behind work surface 40. It can also be appreciated that this type of hydraulic adjustment arrangement can be used to operate to telescopic legs of the desking arrangement of Figure 6. Preferably, a single hydraulic arrangement controls both legs.

The individual office panels 4 have various outlet ports adjacent the base thereof by means of which electrical power feeds can leave a panel 4 and eventually enter the desking system 20. In this way, power can be brought to the desking system through a panelling system or power can be brought through the desking system to the panelling system. In any event, both the panelling system and the desking system can accommodate electrical power feeds therebetween. The various work surfaces 40 can cooperate with either the support arrangement for the office panels 4 or for the independent support arrangements of the desking system. In order to simplify modification

and/or changes, the desking system has separable work surfaces. This reduces the amount of overall storage necessary for defining additional work surfaces and allows for convenient transition from one longitudinal axis of the work surface to another, as certain working surfaces have included therewith a transitional segment which has a somewhat cantilevered arrangement relative to the support arrangements of either the panel or the desking system. Support of this transitional segment from the work surface of either the panelling system or the desking system, again, simplifies the system and reduces installation problems.

Although various preferred embodiments of the present invention have been described herein in detail, it will be appreciated by those skilled in the art, that variations may be made thereto without departing from the spirit of the invention or the scope of the appended claims.

THE CLAIMS DEFINING THE INVENTION ARE AS FOLLOWS:

1. A system for subdividing office space into a plurality of work stations, some of said work stations being defined by means of office panels supporting work surfaces to at least one side thereof, and some of said work stations being defined by a desking arrangement having work surfaces supported independent of said office panels; wherein said office panels each include a frame with at least one intermediate horizontal securing channel extending across said panel and forming a securing structure running the length thereof and exposed at a multiplicity of locations distributed along said securing channel; said horizontal securing channels cooperating with and supporting vertical support members of said work surfaces supported from said panels, said vertical support members engaging said horizontal securing channels at any of said multiplicity of locations therealong; and wherein at least one of said workstations is defined by work surfaces supported by the combined office panels and said desking arrangement where the work surfaces thereof are joined at a transition position intermediate the length of a panel where one end of a work surface adjacent said transition position is supported from one of said panels intermediate the length of the supporting panel; said office panels and said desking system cooperating such that transition positions can occur at any of a host of positions intermediate the length of a panel.

2. A system as claimed in claim 1 wherein at least some of said work surfaces can be interchangeably supported by said desking arrangement or said panels.

3. A system as claimed in claim 1 including a supply of interchangeable work surfaces of various configurations, said supply of work surfaces allowing the work surface configuration to change by interchange of work surfaces.

4. A system as claimed in claim 3 wherein said work surfaces include a plurality of transition work surfaces, each transition work surface having

AUSTRALIAN PATENT OFFICE ML

opposed offset end configurations to define said transition position in the longitudinal axis of the work surface formed between two adjacent work surfaces one supported from said office panels and one supported from said desking system.

5. A system as claimed in claim 1 wherein each frame includes two vertically spaced securing channels and each of said vertical support members engage said channels.

6. A system as claimed in claim 1 or 5 wherein said work surfaces are maintained in engagement with support means of said panels and support means of said desking system by a spring detente arrangement and are releasable therefrom by applying an upward force on said work surfaces.

7. A system as claimed in claim 4 wherein said transition position is part of one of the work surfaces of said desking arrangement or said panels.

8. A system as claimed in claim 7 wherein said work surfaces include transition work surfaces at least primarily supported in a cantilevered arrangement by said office panels.

9. A system as claimed in claim 8 wherein said transition work surfaces define a transitions selected from the group of 15°, 30°, 45°, 60°, 90°, 120°, 135°, 150°, and 180°.

10. A system as claimed in claim 1 wherein electrical power and or communication feeds are interconnected and pass between the panels and the desking arrangement.

11. A system as claimed in claim 1 wherein said work surfaces are removable in segments, some of which terminate at a position intermediate the length of a panel, without detachment from adjacent segments.

AUSTRALIAN PATENT OFFICE MV

12. A system as described in any one of the preceding claims including floor plates which engage legs of said desking system at a transition position between work surfaces thereof disposed in a particular angular orientation therebetween.

DATED this 20th day of March, 1996.

TEKNION FURNITURE SYSTEMS.

WATERMARK PATENT & TRADEMARK ATTORNEYS
290 BURWOOD ROAD
HAWTHORN VICTORIA 3122
AUSTRALIA

AUSTRALIAN PATENT OFFICE MV

42577 |93

FIG. 1.

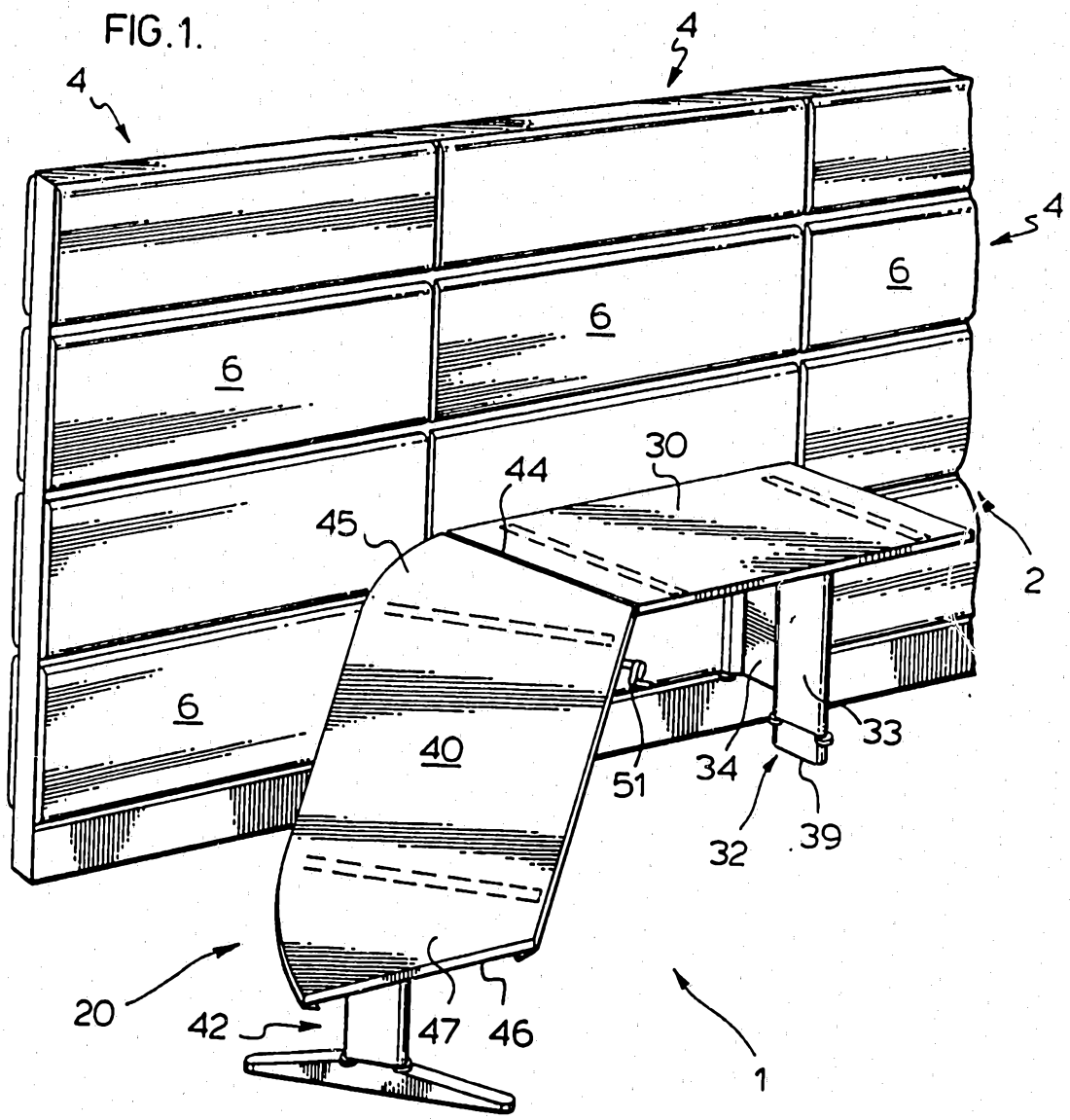

FIG.2.

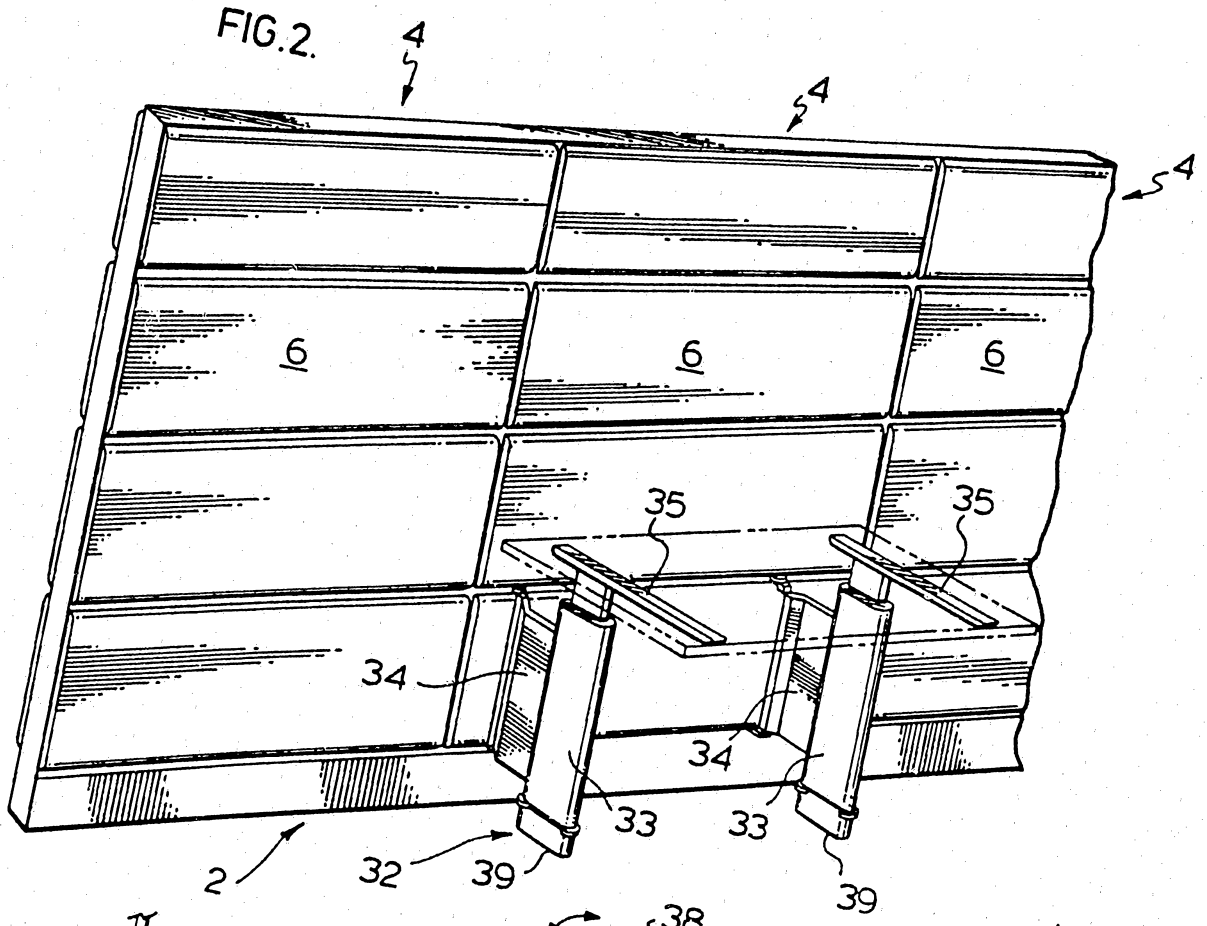

FIG.3.

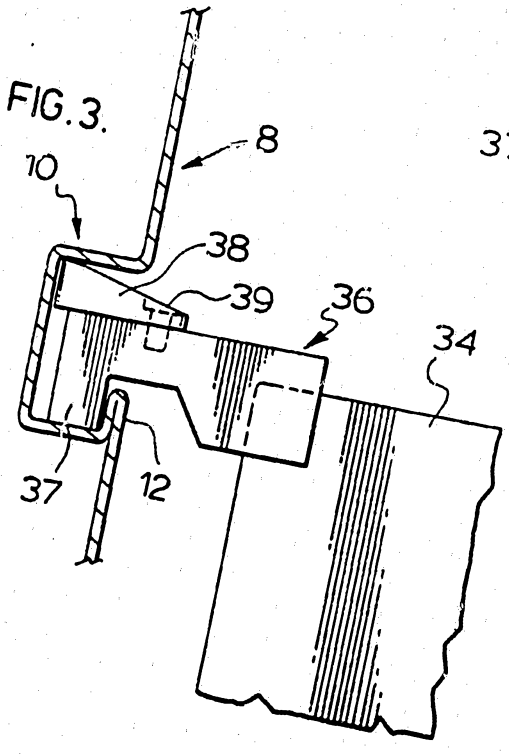

FIG.4.

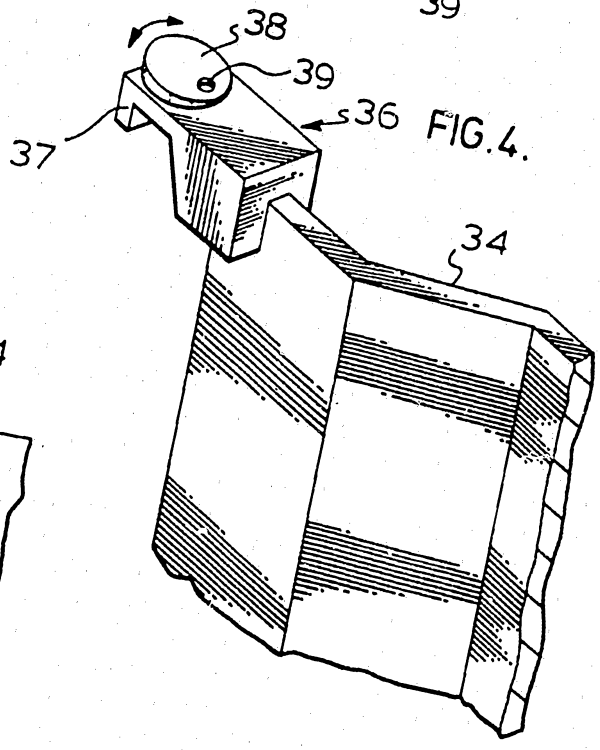

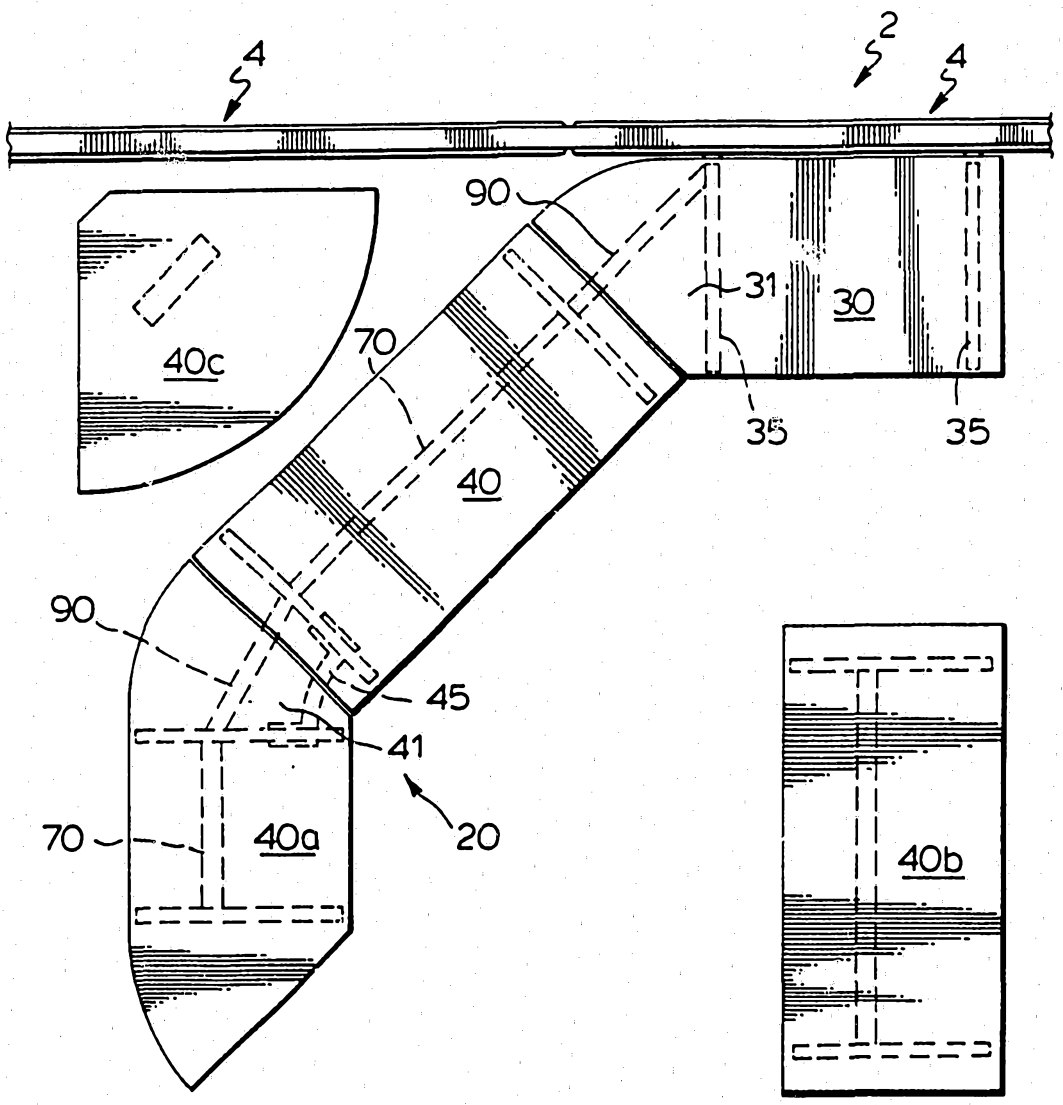

FIG. 5.

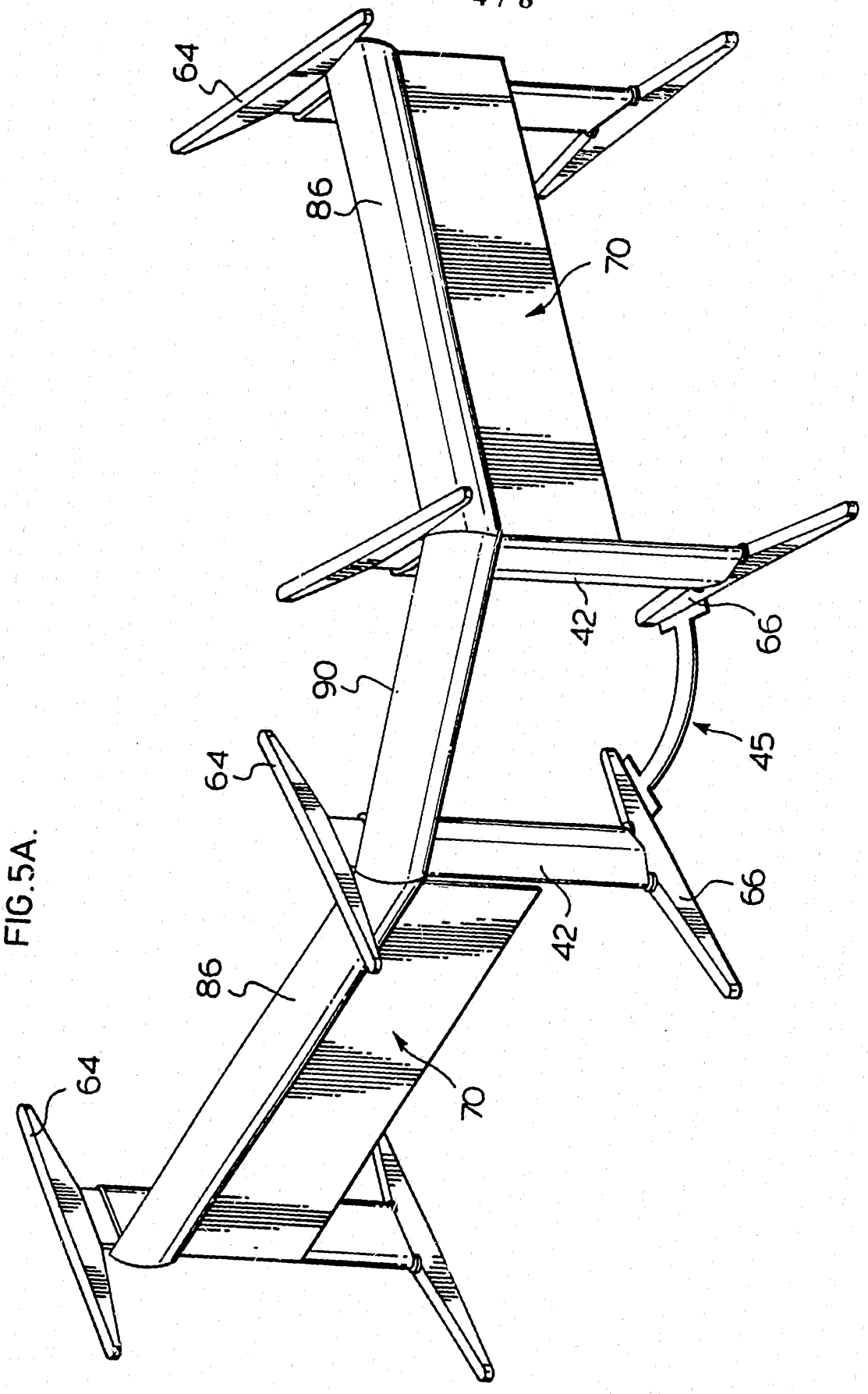

FIG.5A.

FIG. 6.

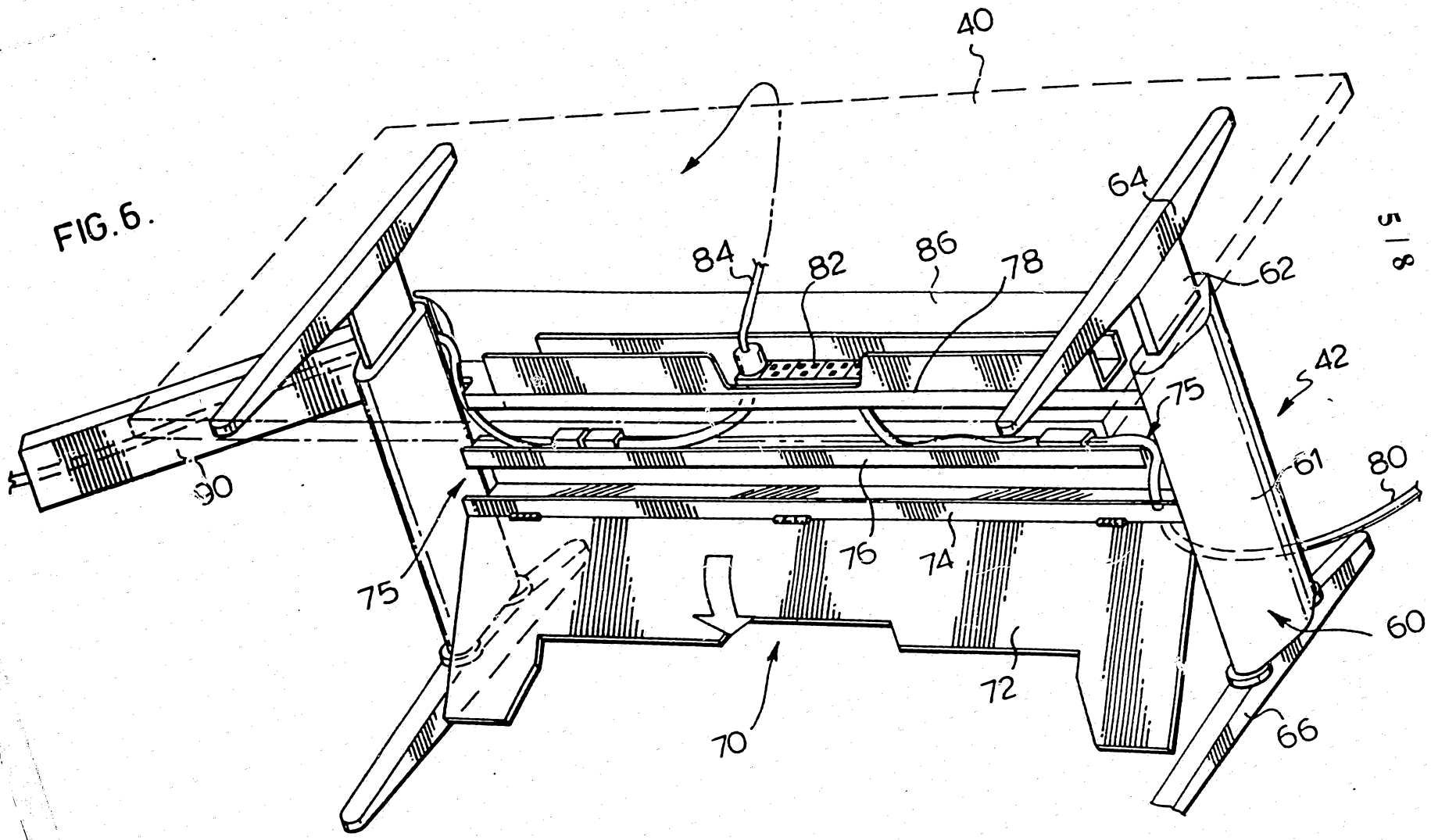

FIG. 7.

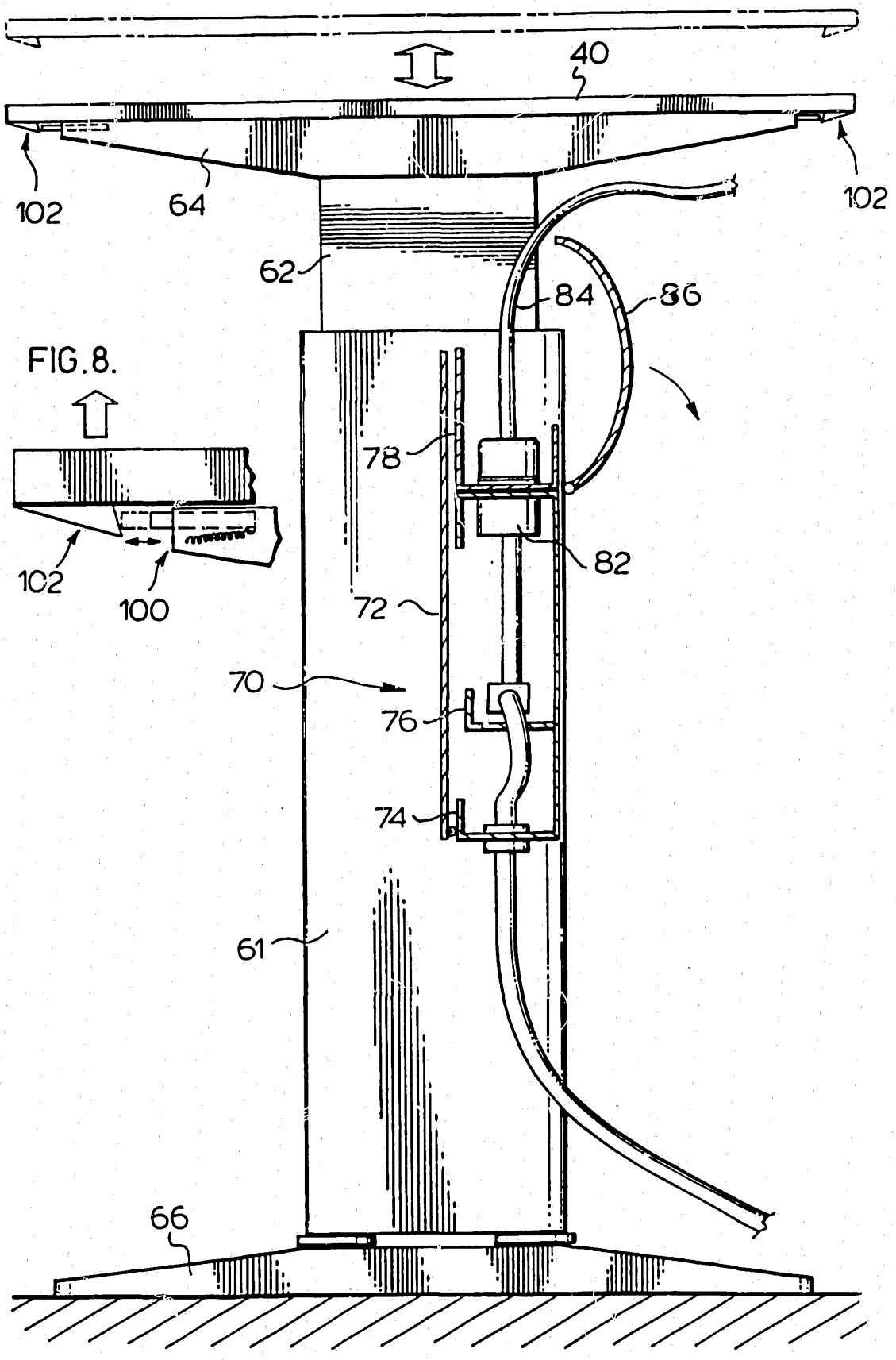

FIG. 8.

FIG.9.

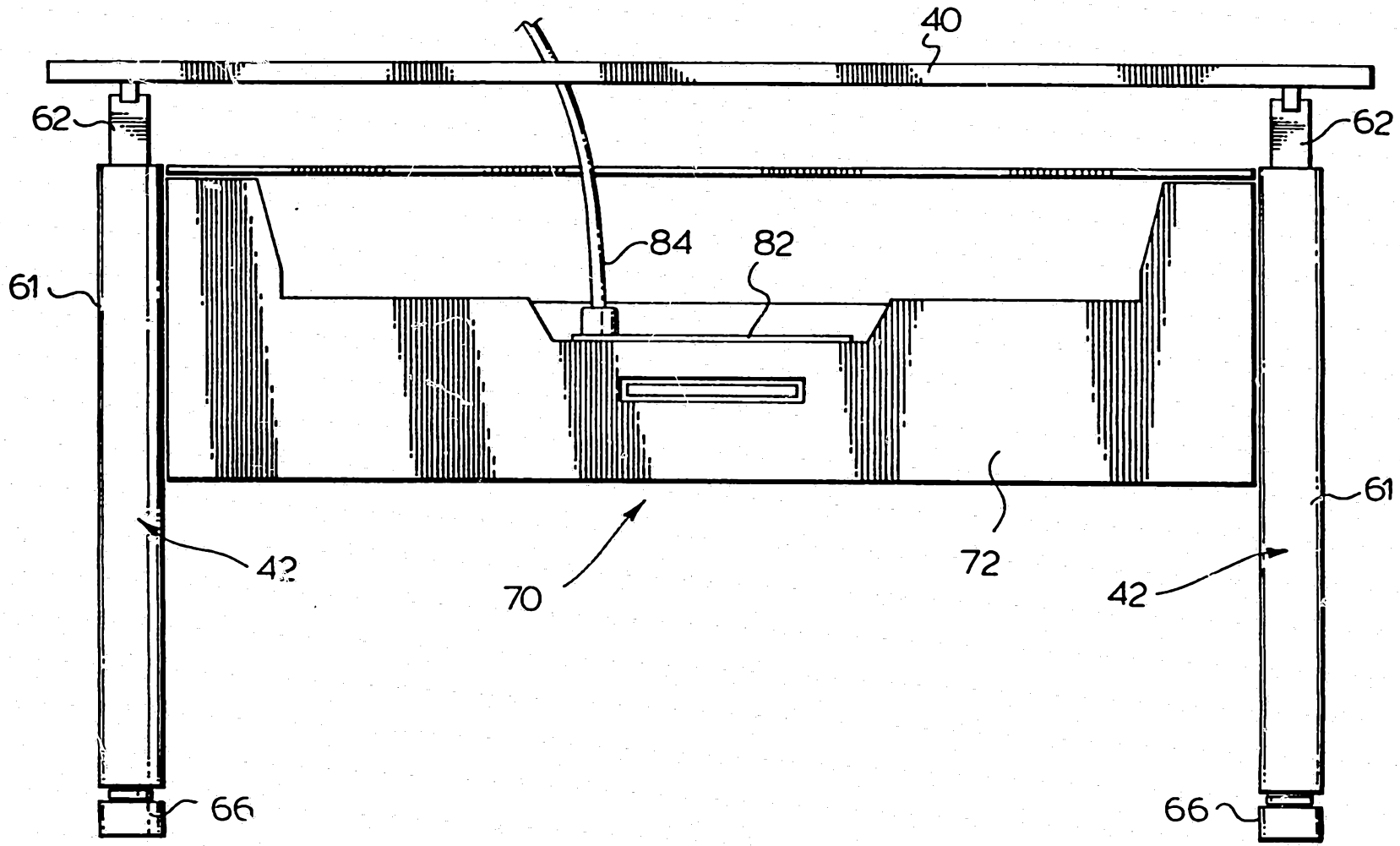

FIG.10.

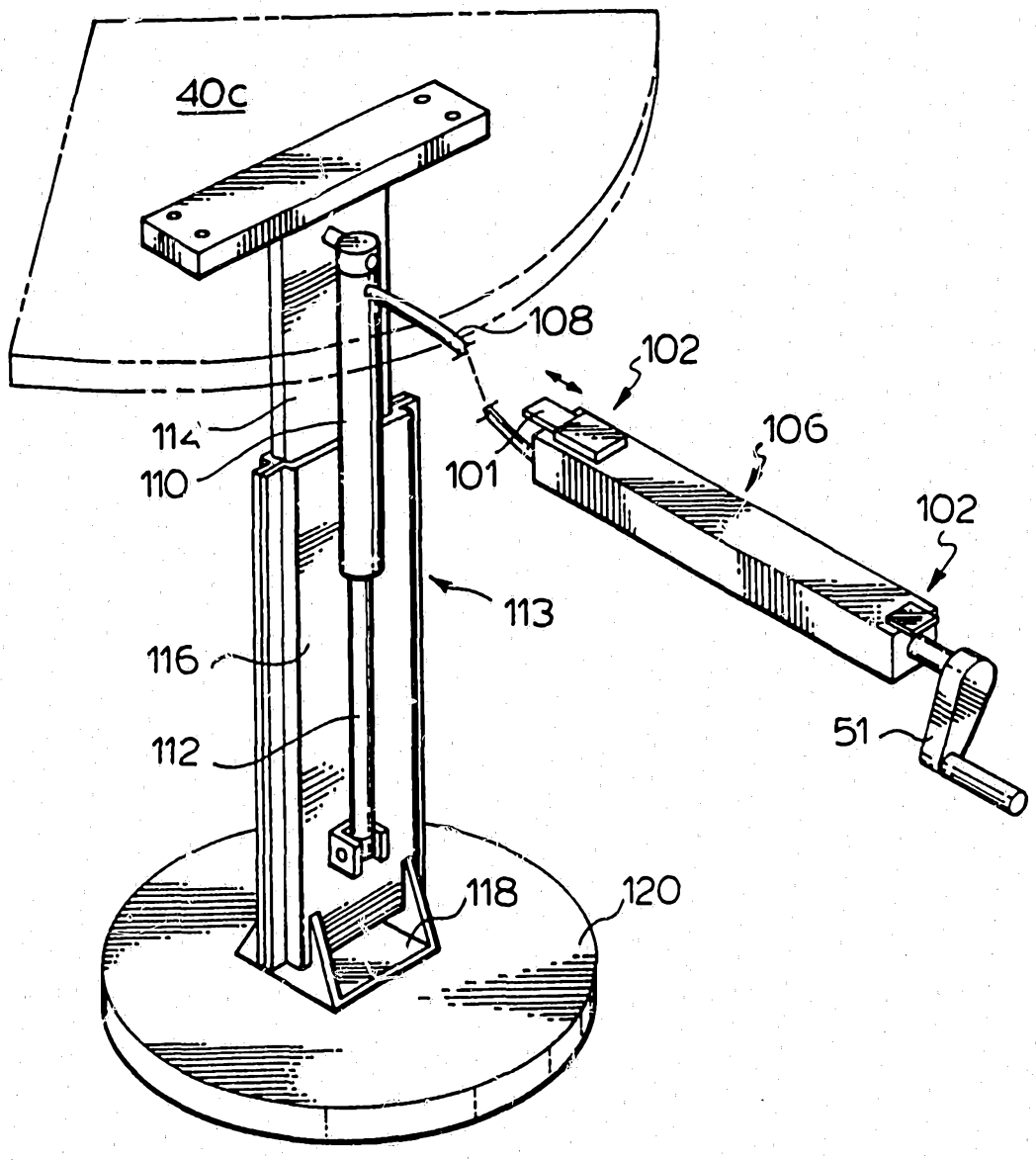
40c
108
102
114
110
101
106
102
113
116
112
51
118
120

FIG.11.

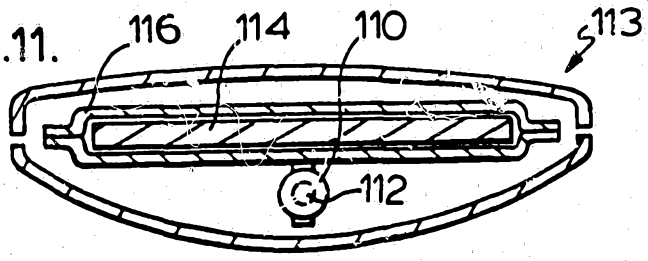
116
114
110
113
112

INTERNATIONAL SEARCH REPORT

International Application No PCT/CA 93/00184

I. CLASSIFICATION OF SUBJECT MATTER (if several classification symbols apply, indicate all)[6]

According to International Patent Classification (IPC) or to both National Classification and IPC

Int.Cl. 5 A47B83/00; A47B21/00; A47B13/00; E04B2/74

II. FIELDS SEARCHED

Minimum Documentation Searched[7]

Classification System	Classification Symbols
Int.Cl. 5	A47B ; E04B

Documentation Searched other than Minimum Documentation to the Extent that such Documents are Included in the Fields Searched[8]

III. DOCUMENTS CONSIDERED TO BE RELEVANT[9]

Category °	Citation of Document,[11] with indication, where appropriate, of the relevant passages[12]	Relevant to Claim No.[13]
X	EP,A,0 458 264 (C.O.M. S. COOP. A R.L.) 27 November 1991	1
A	abstract see figures 1-8	2-5,7-28

A	EP,A,0 479 331 (HERMAN MILLER, INC.) 8 April 1992 see figures 1-7	1,11-28

A	EP,A,0 462 920 (MOBEL LINEA, S.L.) 27 December 1991 see figures 1-17	1-28

A	US,A,4 884 513 (HERMAN MILLER) 5 December 1989 see figures 17,23-25C	1,9

	-/--	

° Special categories of cited documents :[10]

"A" document defining the general state of the art which is not considered to be of particular relevance

"E" earlier document but published on or after the international filing date

"L" document which may throw doubts on priority claim(s) or which is cited to establish the publication date of another citation or other special reason (as specified)

"O" document referring to an oral disclosure, use, exhibition or other means

"P" document published prior to the international filing date but later than the priority date claimed

"T" later document published after the international filing date or priority date and not in conflict with the application but cited to understand the principle or theory underlying the invention

"X" document of particular relevance; the claimed invention cannot be considered novel or cannot be considered to involve an inventive step

"Y" document of particular relevance; the claimed invention cannot be considered to involve an inventive step when the document is combined with one or more other such documents, such combination being obvious to a person skilled in the art.

"&" document member of the same patent family

IV. CERTIFICATION

Date of the Actual Completion of the International Search	Date of Mailing of this International Search Report
17 AUGUST 1993	17. 09. 93
International Searching Authority	**Signature of Authorized Officer**
EUROPEAN PATENT OFFICE	NOESEN R.F.

Form PCT/ISA/210 (second sheet) (January 1985)

III. DOCUMENTS CONSIDERED TO BE RELEVANT (CONTINUED FROM THE SECOND SHEET)

Category °	Citation of Document, with indication, where appropriate, of the relevant passages	Relevant to Claim No.
A	EP,A,0 364 782 (GESIKA BÜROMÖBELWERK GMBH & CO KG) 25 April 1990 see figures 1-3	6

ANNEX TO THE INTERNATIONAL SEARCH REPORT ON INTERNATIONAL PATENT APPLICATION NO.

CA 9300184
SA 73905

This annex lists the patent family members relating to the patent documents cited in the above-mentioned international search report. The members are as contained in the European Patent Office EDP file on 17/08/93
The European Patent Office is in no way liable for these particulars which are merely given for the purpose of information.

Patent document cited in search report	Publication date	Patent family member(s)		Publication date
EP-A-0458264	27-11-91	AU-A-	7719991	21-11-91
		CA-A-	2042865	22-11-91
		JP-A-	4228748	18-08-92
EP-A-0479331	08-04-92	US-A-	4685255	11-08-87
		CA-A-	1256664	04-07-89
		CA-A-	1284263	21-05-91
		DE-A-	3586305	13-08-92
		EP-A,B	0174426	19-03-86
		EP-A-	0479330	08-04-92
		US-A,B	4876835	31-10-89
		US-A-	5038539	13-08-91
EP-A-0462920	27-12-91	None		
US-A-4884513	05-12-89	CA-A-	1318716	01-06-93
		US-A-	5083512	28-01-92
		US-A-	5154126	13-10-92
EP-A-0364782	25-04-90	DE-A-	3835365	19-04-90
		JP-A-	2164309	25-06-90
		US-A-	4944235	31-07-90