D. TOWNSEND.

RETORT.

APPLICATION FILED MAR. 11, 1911.

1,068,610.

Patented July 29, 1913.

3 SHEETS—SHEET 1.

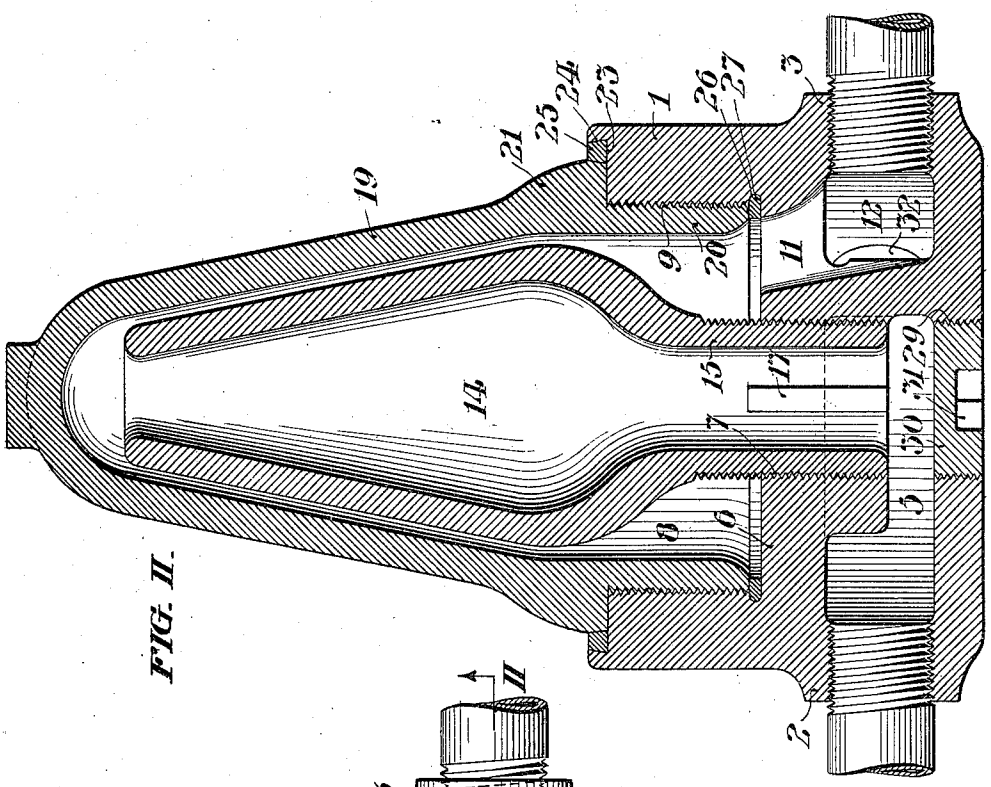

FIG. II.

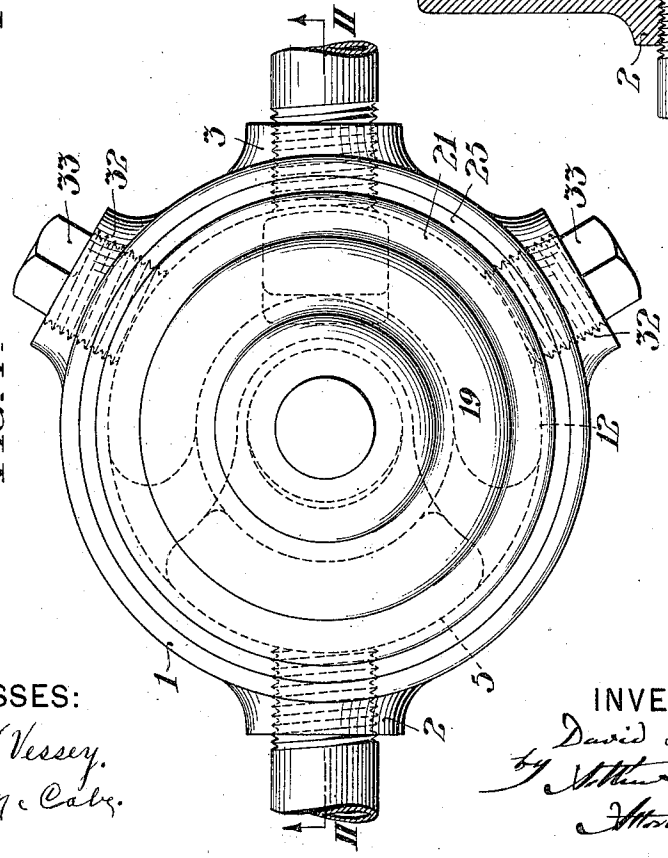

FIG. I.

WITNESSES:

Philip W. Vessey.

James M. Caby.

INVENTOR:

David Townsend,

by Arthur E. Paige

Attorney.

COLUMBIA PLANOGRAPH CO., WASHINGTON, D. C.

D. TOWNSEND.

RETORT.

APPLICATION FILED MAR. 11, 1911.

1,068,610.

Patented July 29, 1913.

3 SHEETS—SHEET 2.

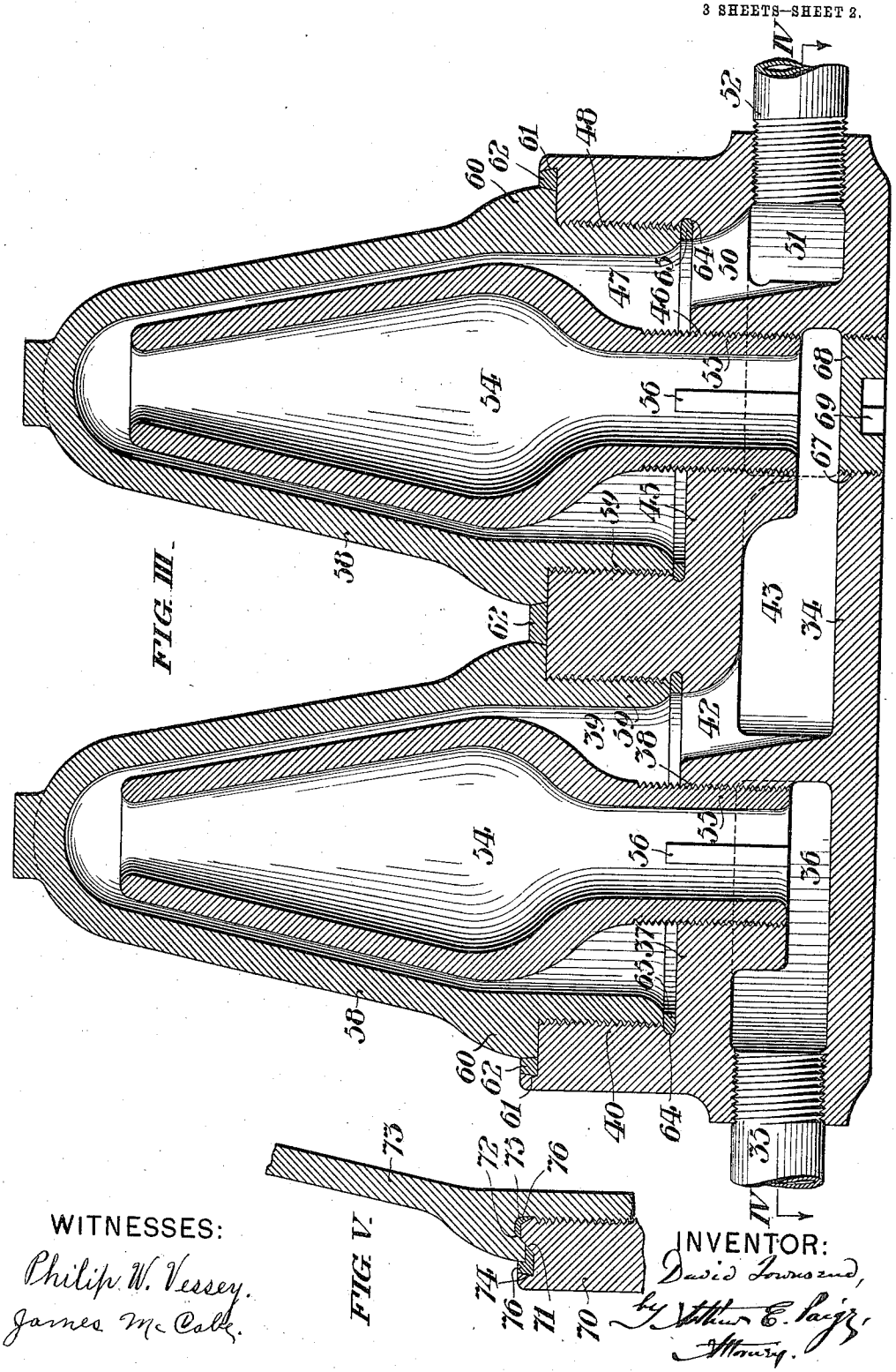

FIG. III.

FIG. V.

WITNESSES:

Philip W. Vessey.

James McCalk.

INVENTOR:

David Townsend,

by Arthur E. Paige,

Attorney.

COLUMBIA PLANOGRAPH CO., WASHINGTON, D. C.

D. TOWNSEND.

RETORT.

APPLICATION FILED MAR. 11, 1911.

1,068,610.

Patented July 29, 1913.

3 SHEETS—SHEET 3.

FIG. IV.

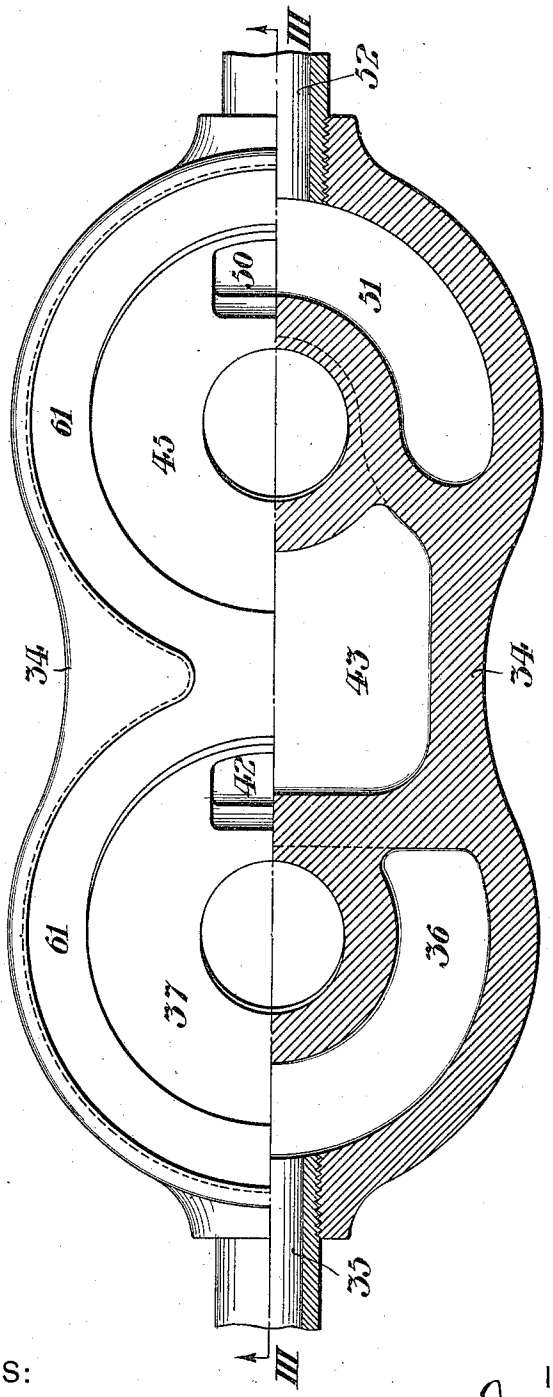

WITNESSES:

Philip W. Vessey.

James M. Cobe.

INVENTOR:

David Townsend,

by Arthur E. Page,

Attorney.

COLUMBIA PLANOGRAPH CO., WASHINGTON, D. C.

UNITED STATES PATENT OFFICE.

DAVID TOWNSEND, OF PHILADELPHIA, PENNSYLVANIA.

RETORT.

1,068,610. Specification of Letters Patent. Patented July 29, 1913.

Application filed March 11, 1911. Serial No. 613,878.

To all whom it may concern:

Be it known that I, DAVID TOWNSEND, of Philadelphia, in the State of Pennsylvania, have invented a certain new and useful Improvement in Retorts, whereof the following is a specification, reference being had to the accompanying drawings.

My invention relates to retorts adapted for inclusion in a fluid circulating system to superheat fluid by directing the fluid in a film between opposed walls of the retort, and, it is an object of my invention to provide such a retort with means whereby the distance between such opposed walls may be adjustably and variably predetermined.

As hereinafter described, my invention includes a retort having a pair of conical members fitted concentrically one within the other, said members being relatively axially adjustable to vary the space between their opposed walls and said retort including means to direct a fluid through the central conical member and through said adjustably variable space between said members.

My invention also includes means for sealing the outer conical member in fluid tight relation with a base in which both of said members are fitted, and, the various novel features of construction and arrangement hereinafter more definitely specified.

In the drawings; Figure I is a plan view of a retort including but a single pair of said relatively adjustable conical members. Fig. II is a vertical sectional view of said retort, taken on the line II, II in Fig. I. Fig. III is a vertical sectional view of a retort including two pairs of relatively adjustable conical members, taken on the line III, III in Fig. IV. Fig. IV is a partly sectional plan view of the base of the retort shown in Fig. III; section being taken on the line IV, IV in Fig. III. Fig. V is a fragmentary sectional view showing a modified form of means for sealing the joint between an outer conical member and the base in which it is fitted.

In the form of my invention shown in Figs. I and II, the base 1 is provided with the fluid inlet 2 and outlet 3. Said inlet 2 opens into the chamber 5 beneath the diaphragm 6 having the central screw threaded socket 7. Said diaphragm 6 separates said chamber 5 from the chamber 8 in the screw threaded socket 9 in concentric relation with said socket 7. The port 11 in said diaphragm 6 affords communication from said chamber 8 to the chamber 12 provided with said outlet 3. The inner conical member 14, being a tubular sleeve, has its lower screw threaded end 15 fitted in vertically adjustable relation with the base 1 in said central socket 7 and is conveniently provided with opposite internal ribs 17 or other means affording a wrench hold by which said member 14 may be rotated. The outer conical member 19 has its lower screw threaded end 20 fitted in said socket 9 in said base 1, and, the circumferential flange 21 on said member 19 fits upon the top of said base within the recess 23 which has its outer wall 24 undercut to hold cement or other suitable material 25 in position to seal the joint between said base 1 and conical member 19. I also find it convenient to provide said socket 9 with a recess 26 at the inner end thereof to hold cement or other suitable material 27 in position to seal the joint between the inner end of said member 19 and said base 1. Although said inner conical member 14 may be axially adjusted in predetermined relation to the outer conical member 19 before the latter is fitted in position in the base, I find it convenient to provide an opening 29 in the bottom of the base to afford access to the inner end of said conical member 14 to permit the latter to be rotated after the conical member 19 is fitted in stationary position in said base. Said opening 29 is normally closed by the screw threaded plug 30 conveniently provided with the wrench hold 31. Said retorts are intended to be heated by exposing to flame or products of combustion the outer surfaces thereof adjacent to the film passageways within the retorts. For instance, such retorts may be set behind the bridge wall of a steam boiler furnace, with their upper portions projecting in position to baffle the flame or products of combustion from said furnace, the bases of the retorts being conveniently embedded in refractory material.

In order to obtain a cumulative heating effect the fluid may be caused to pass in a film between successive series of opposed surfaces which are relatively adjustable to vary the space between them. For instance, a series of such retorts as above described may be included in a fluid circulating system by connecting the outlet of one with the inlet of another in straight alinement. However, I find it convenient to provide said base 1 with outlets 32 in angular rela-

tion to said inlet 2 so that such retorts may be connected in diagonal relation with each other more compactly than if disposed in straight series and thus more efficiently baffle the flames or products of combustion to which they are exposed. It is to be understood that whatever outlets aforesaid are not in use may be closed by screw plugs 33.

In the form of my invention shown in Figs. III and IV, the base 34 is adapted to support two pairs of conical members similar to those above described. Said base has the fluid inlet 35 which opens into the chamber 36 beneath the diaphragm 37 having the central screw threaded socket 38. Said diaphragm 37 separates said chamber 36 from the chamber 39 in the screw threaded socket 40 in concentric relation with said socket 38. The port 42 in said diaphragm 37 affords communication from said chamber 39 to the chamber 43 beneath the diaphragm 45 having the central screw threaded socket 46. Said diaphragm 45 separates said chamber 43 from the chamber 47 in the screw threaded socket 48 in concentric relation with said socket 46. The port 50 in said diaphragm 45 affords communication from said chamber 47 to the chamber 51 having the outlet 52. The inner conical members 54 have their lower screw threaded ends 55 respectively fitted in vertically adjustable relation with said base 34 in said central sockets 38 and 46 and are conveniently provided with the wrench holds 56 by which they may be rotated. The outer conical members 58 have their lower screw threaded ends 59 fitted in said socket 40 and 48 in said base 34, and, the circumferential flanges 60 on said members 58 fit upon the top of said base within the recess 61, which has its outer wall undercut to hold cement or other suitable material 62 in position to seal the joint between said base 34 and conical members 58. I also find it convenient to provide said sockets 40 and 48 with respective recesses 64 at the inner ends thereof to hold cement or other suitable material 65 in position to seal the joints between the inner ends of said members 58 and said base 34. Said inner conical members 54 may be axially adjusted in predetermined relation to the outer conical members 58 before the latter are fitted in position in said base 34, and, if so, the bottom of said base may be imperforate beneath the respective sockets 38 and 46 as indicated beneath the socket 38 in Fig. III. However, it is to be understood that an opening 67 may be provided in the bottom of said base, beneath each of said sockets 38 and 46 as indicated beneath the latter in Fig. III, and, each of said openings may be normally closed by a screw threaded plug 68 conveniently having a wrench hold 69.

It may be observed that in the respective forms of my invention above described, the flanges 21 and 60 on the outer conical members have plane surfaces at right angles to their axes fitted to similar surfaces on the respective bases 1 and 34. However, I do not desire to limit myself to such means for making a tight joint between said members and the bases which support them, and any suitable means may be employed, for instance, as indicated in Fig. V the base 70 has the conical bearing surface 71 fitted to the similarly shaped bearing surface 72 on the outer retort member 73, and, said base and retort member are respectively provided with recesses 74 and 75 for sealing material 76.

In each form of my invention above described, a fluid may be caused to flow through the retort from the inlet to the outlet thereof, and during its passage be directed in a film between the opposed conical walls of the retort so as to be superheated by contact with said walls to a degree which may be variably predetermined by varying the distance between such opposed walls as above described.

Although I have shown conical members having opposed surfaces arranged in straight parallelism, it is to be understood that they may be otherwise shaped, for instance, the surfaces may be curved, arranged in steps, or otherwise constructed to afford a tortuous passageway for a fluid. Therefore, I do not desire to limit myself to the precise details of construction or arrangement herein set forth, as it is obvious that various modifications may be made therein without departing from the essential features of my invention as defined in the appended claims.

I claim:—

1. In a retort, for superheating a fluid, a base having a series of pairs of screw threaded sockets, each pair being in concentric relation, and ports affording communication between the respective pairs of sockets; pairs of rotary conical members fitted concentrically in said pairs of sockets; said members being relatively rotatable and thus axially adjustable to vary the spaces between their opposed walls; and, said base including an inlet, an outlet, and ports arranged to direct a fluid through the inner conical member of one pair, through the space between said member and its fellow, through another inner conical member, through the space between it and its fellow, and thence through said outlet.

2. In a retort for superheating a fluid, a base having a series of pairs of sockets, each pair being in concentric relation, and ports affording communication between the respective pairs of sockets; pairs of rotary conical members fitted concentrically in said pairs of sockets; said members being relatively axially adjustable to vary the space

between their opposed walls, and, said base including an inlet, an outlet, and ports arranged to direct a fluid through the inner conical member of one pair, through the space between said member and its fellow, through another inner conical member, through the space between it and its fellow, and thence through said outlet.

3. In a retort, a base having a series of pairs of sockets, each pair being in concentric relation; pairs of members fitted one within the other in said pairs of sockets; said members being relatively adjustable to vary the space between their opposed walls, and, said base including an inlet, an outlet, and ports arranged to direct a fluid from said inlet through said inner members and the spaces between said members and their fellows, and thence through said outlet.

4. In a retort, a base having a pair of screw threaded sockets in concentric relation; a pair of rotary conical members fitted concentrically one within the other in said sockets; said members being relatively axially adjustable to vary the space between their opposed walls, and, said retort including an inlet, an outlet, and ports arranged to direct a fluid from said inlet through the inner conical member through the space between said members and thence through said outlet.

5. In a retort, the combination with a base having two screw threaded sockets in concentric relation; of a pair of conical members fitted concentrically one within the other in the respective sockets; said members being relatively axially adjustable to vary the space between their opposed walls, and, said retort including means to direct a fluid through the inner conical member and through said adjustably variable space between said members.

6. In a retort, the combination with a base; of a pair of conical members fitted concentrically one within the other; said members being relatively axially adjustable to vary the space between their opposed walls, and, said retort including means to direct a fluid through the inner conical member and through said adjustably variable space between said members.

7. In a retort, a pair of conical members fitted concentrically one within the other; said members being relatively axially adjustable to vary the space between their opposed walls, and, said retort including means to direct a fluid through the inner conical member and through said adjustably variable space between said members.

8. In a retort, a pair of conical members fitted one within the other; said members being relatively axially adjustable to vary the space between their opposed walls, and, said retort including means to direct a fluid through the inner conical member and through said adjustably variable space between said members.

9. In a retort, the combination with a base; of an outer member primarily separate from said base but rigidly secured thereon, having a conical inner surface; a tubular member fitted within said conical member, having an outer conical face opposed thereto, and means connecting it in axially adjustable relation with said base.

10. In a retort, an outer member having a conical inner surface; a tubular member fitted within said conical member, having an outer conical face opposed thereto, and means connecting it in adjustable relation with said base.

11. In a retort for superheating a fluid by passing it therethrough in a film between opposed heated surfaces; of opposed surfaces and means arranged to adjustably vary the space between said surfaces and thus predetermine the thickness of such film.

12. A retort having opposed circular walls with a fluid passageway between them, and an inlet and outlet having axes extending transversely with respect to the axis of said walls and in diagonally transverse relation with each other; whereby a series of such retorts may be connected in staggered relation with the outlet of one in connection with the inlet of another.

13. A retort having opposed walls with a fluid passageway between them, and an inlet and outlet having axes extending transversely with respect to the planes of said walls and in transverse relation with each other; whereby a series of such retorts may be connected in staggered relation with the outlet of one in connection with the inlet of another.

In testimony whereof, I have hereunto signed my name at Philadelphia, Pennsylvania, this eighth day of March, 1911.

DAVID TOWNSEND.

Witnesses:
O. M. BOEHM,
CHAS. BENTLEY COLLINS.

Copies of this patent may be obtained for five cents each, by addressing the "Commissioner of Patents, Washington, D. C."