(12) INTERNATIONAL APPLICATION PUBLISHED UNDER THE PATENT COOPERATION TREATY (PCT)

(19) World Intellectual Property Organization
International Bureau

(43) International Publication Date
09 November 2017 (09.11.2017)

WIPO | PCT

(10) International Publication Number
WO 2017/191430 A1

(51) International Patent Classification:
F16B 21/18 (2006.01) *H01R 24/86* (2011.01)
H01R 13/46 (2006.01) *F16B 21/07* (2006.01)
H01R 13/627 (2006.01) *H01R 107/00* (2006.01)
H01R 13/64 (2006.01) *G06K 7/00* (2006.01)

(21) International Application Number:
PCT/GB2017/051165

(22) International Filing Date:
26 April 2017 (26.04.2017)

(25) Filing Language: English

(26) Publication Language: English

(30) Priority Data:
1607683.8 03 May 2016 (03.05.2016) GB

(71) Applicant: **TECHNOLOGY SOLUTIONS (UK) LIMITED** [GB/GB]; Berakah, 8 Dunsmore Close, Loughborough, Leicester Leicestershire LE11 3RD (GB).

(72) Inventors: **MARSLAND, David**; c/o Technology Solutions (UK) Limited, Berakah, 8 Dunsmore Close, Loughborough Leicestershire LE11 3RD (GB). **EVANS, David R**; c/o Technology Solutions (UK) Limited, Berakah, 8 Dunsmore Close, Loughborough Leicestershire LE11 3RD (GB).

(74) Agent: **MACDONALD, Christopher** et al.; Adamson Jones, BioCity Nottingham, Pennyfoot Street, Nottingham Nottinghamshire NG1 1GF (GB).

(81) Designated States *(unless otherwise indicated, for every kind of national protection available)*: AE, AG, AL, AM, AO, AT, AU, AZ, BA, BB, BG, BH, BN, BR, BW, BY, BZ, CA, CH, CL, CN, CO, CR, CU, CZ, DE, DJ, DK, DM, DO, DZ, EC, EE, EG, ES, FI, GB, GD, GE, GH, GM, GT, HN, HR, HU, ID, IL, IN, IR, IS, JP, KE, KG, KH, KN, KP, KR, KW, KZ, LA, LC, LK, LR, LS, LU, LY, MA, MD, ME, MG, MK, MN, MW, MX, MY, MZ, NA, NG, NI, NO, NZ, OM, PA, PE, PG, PH, PL, PT, QA, RO, RS, RU, RW, SA, SC, SD, SE, SG, SK, SL, SM, ST, SV, SY, TH, TJ, TM, TN, TR, TT, TZ, UA, UG, US, UZ, VC, VN, ZA, ZM, ZW.

(84) Designated States *(unless otherwise indicated, for every kind of regional protection available)*: ARIPO (BW, GH, GM, KE, LR, LS, MW, MZ, NA, RW, SD, SL, ST, SZ, TZ, UG, ZM, ZW), Eurasian (AM, AZ, BY, KG, KZ, RU, TJ, TM), European (AL, AT, BE, BG, CH, CY, CZ, DE, DK, EE, ES, FI, FR, GB, GR, HR, HU, IE, IS, IT, LT, LU, LV, MC, MK, MT, NL, NO, PL, PT, RO, RS, SE, SI, SK, SM, TR), OAPI (BF, BJ, CF, CG, CI, CM, GA, GN, GQ, GW, KM, ML, MR, NE, SN, TD, TG).

(54) **Title:** MOUNTING SYSTEM

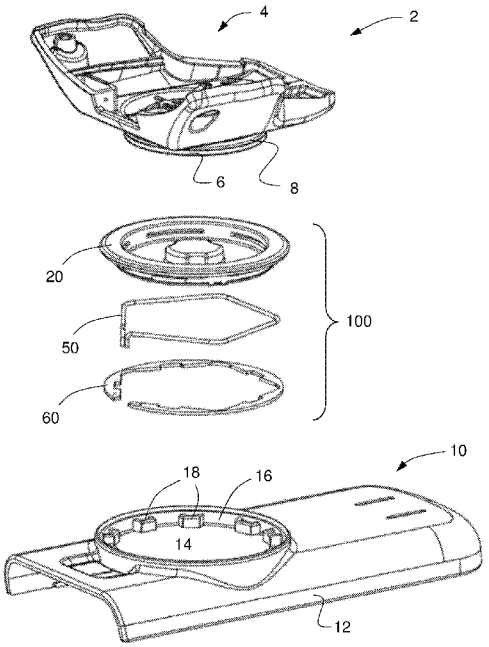

Figure 1

(57) **Abstract:** The present invention relates to a mounting system. In particular, the invention relates to a releasable mounting system that can be readily modified to provide different detachment forces depending on a preferred use. The mounting system (2) includes a resilient member (50) to provide a spring force giving a force-limited connection between first and second components (4,10). The spring force may be adjusted to alter the detachment force necessary to break the force-limited connection. Electrical contacts (176,186) may be provided to allow power and/or data transfer through the mounting system.

WO 2017/191430 A1

[Continued on next page]

Declarations under Rule 4.17:

— *as to applicant's entitlement to apply for and be granted a patent (Rule 4.17(ii))*
— *of inventorship (Rule 4.17(iv))*

Published:

— *with international search report (Art. 21(3))*
— *before the expiration of the time limit for amending the claims and to be republished in the event of receipt of amendments (Rule 48.2(h))*

Mounting System

The present invention relates to a mounting system, and in particular to a releasable mounting system that can be readily modified to provide different detachment forces depending on a preferred use.

It is not uncommon to design or engineer a device or tool to allow it to be used in combination with more than one related devices. Such an arrangement can allow customisation of a core device to the demands of a particular situation, rather that requiring a large number of bespoke devices which duplicate numerous common components.

One such example is where a data collection device or scanner or reader, such as a UHF RFID reader, is used together with a portable computer or tablet. The basic scanner/reader can include the hardware and firmware to provide the scanning function, and be provided with communication means to relay this information to a separate computer/tablet device. The software for a particular application and/or stored data relating, for example, to particular RFID tags can be installed on the separate computer/tablet. This arrangement simplifies the scanner/reader, and allows a single model to be produced for numerous different purposes. The software element may be made bespoke to meet particular requirements, and can be provided on a dedicated computer/tablet or even on a user's existing standard device.

The data connection may be wired or wireless, for example using Bluetooth, WiFi, Infrared or near field communication. Even where wireless transmission is used, it is still beneficial to provide some physical connection between the devices for ease of handling. The conventional approach is to provide some form of releasable connector or mounting system with a predetermined detachment or 'break-away' force, so that in the event of a sufficient impact on the devices, perhaps from a fall, the mounting will allow separation to minimise damage to either device or to the mounting between them.

The selection of a suitable break-away force is not straightforward. If the force is too high, then the devices may not separate in the event of a significant impact. If the force is too low, then there may be undesirable play or movement during use, and the devices may even separate when not required. Both scenarios result in an increased risk of damage to one or both devices, either as a result of the increased weight of the joined devices, or from an increased risk of separation and dropping of one device during use, and/or to damage and increased wear of the mounting.

The correct break-away force depends on a large number of factors including, but not limited to, the size and weight of each device, the inherent strength or robustness of the devices and the environment and manner in which they are being used. There is, therefore, no one suitable break-away force that will suit all combinations of devices and uses. As a result, producers of connectors/mounting systems are typically faced with a choice of producing a single connector with a break-away force intended as a compromise to cover a variety of devices and operations, or providing a large number of bespoke connectors, each providing a more specific break-away force to meet particular requirement.

It is an aim of the present invention to provide a better solution to the problems discussed above which avoids the need for compromise while minimising the costs of producing connectors or mounting devices having a variety of different break-away forces.

According to a first aspect of the invention there is provided a mounting system as defined in the appended claim 1. Further optional features of the mounting system are recited in the associated dependent claims.

By providing a resilient member and a separate resistant member to modify the spring force of the resilient member, the invention provides a mounting system having a number of common components, and one interchangeable component which serves to alter the break-away force of the mounting. A variety of mounting

devices of differing strengths can therefore be provided simply and at minimal cost.

The resistant member may abut/contact the resilient member in one or more locations to prevent deformation of the resilient member at those locations, thus limiting the portions of the resilient member that can deform and thereby adjusting the force that needs to be overcome to deform the resilient member.

The resilient member may comprise a length of resilient material and the resistant member may abut a first section of the length of resilient material and be spaced from a second section of the length of resilient material. The spaced portion allows only a part of the length of resilient material to deform, increasing the resilient/spring force compared with the full length.

The resistant member may comprise a wall section with a cut-out to space a part of the resistant member from the second section of the length of resilient material. The second section may be located between two sections of the length of resilient material that abut the resistant member

The resistant member may be exchangeable for an alternative resistant member with a differently sized cut-out to allow modification of the deformable length and thus the spring force of the resilient member.

The resilient member may comprise a wire, for example comprising spring steel.

The recess of the mounting device may be a groove provided around the periphery of a first component and the resilient member may form a substantially closed loop to engage with the groove at more than one location.

The resilient member may comprise a plurality of straight sections, for example so that the resilient member takes the form of a polygon, in particular a regular polygon such as a hexagon or pentagon.

A part of each straight section of the resilient member may protrude through a slot provided in a socket located inside the resilient member.

The resistant member may comprise a collar surrounding the resilient member. The collar may have an inner profile comprising a plurality of straight wall sections each having a generally centrally positioned cut-out. The length of each cut out may be between 3mm and 15mm, for example 12mm, 9mm or 6mm. The collar may be a laser cut part.

The mounting system may further comprise an electrical contact to allow power and/or data transmission between the first and second components when connected.

The invention therefore also provides a mounting system as defined in the appended claim 18. Further optional features are recited in the associated dependent claims.

The mounting system provides a force-limited connection between first and second components, and comprises an electrical contact providing an electrical connection between the first and second components when the force-limited connection is formed.

A plurality of discrete electrical contacts may be provided. At least one of the plurality of discrete electrical contacts may provide data transfer between the first and second components. The data may relate to information detected by, obtained by, or input to, one of the first or second components that is relayed to the other of the first and second components, for example for display and/or storage.

At least one of the plurality of discrete electrical contacts may additionally, or alternatively, provide power transfer between the first and second components. The mounting system may then further comprise power management hardware such as control circuitry to control the power transfer between the first and second

components. The control circuitry may permit power transfer between the first and second components only when one of the first and second components is connected to an external power supply and/or permit power transfer in only one direction between the first and second components. For example, the power management hardware may allow power transfer only from the second device to the first device, and only when the second device is charging from an external supply.

The mounting system may further comprise internal alignment features that limit the possible orientations of the first component relative to the second component. A correct alignment of a plurality of discrete electrical contacts associated with each of the first and second components can then be ensured.

The first component may be an adapter or case for receiving a portable computer or tablet, or providing a standard connector such as a Quad Lock (RTM) connector or similar. In its simplest form, the first component may be just a profiled disc of material that could be glued to the underside of a mobile device. This disc would provide the features to form the force-limited connection with the resilient member, but could have a plane top surface that could be glued or stuck to device using, for example, double sided adhesive tape or foam. Alternatively, the first component may be a portable computer, ie the described components could be built/moulded into the casing of a bespoke portable computer.

The second component may be, for example, an RFID reader or an adapter for connection to an RFID reader. In other words, the necessary features could be built/moulded into the casing of an RFID reader or similar or may be provided on any number of suitable adapters.

The invention also provides a collar for a mounting system as previously described. The collar can provide the abutment and cut-outs to adjust the spring force of the resilient member during use, and so providing individual collars allows a user to select an alternative cut-out length and adjust the mounting system as required.

Accordingly, the invention also provides a kit comprising a plurality of collars, each collar having a plurality of wall sections each with a generally centrally positioned cut-out, wherein at least two collars within the kit have different length cut-outs. The kit may further comprise a mounting system as previously described.

Wherever practicable, any of the essential or preferable features defined in relation to any one aspect of the invention may be applied to any further aspect. Accordingly the invention may comprise various alternative configurations of the features defined above.

Practicable embodiments of the invention are described in further detail below by way of example only with reference to the accompanying drawings, of which:

Figure 1 shows an exploded view of a mounting system according to the present invention;

Figure 2 shows an exploded view of a sub-assembly from the system of Figure 1;

Figure 3 shows an assembled view of the sub-assembly of Figure 2;

Figure 4 shows an assembled view of the sub-assembly of Figure 2 from the opposite side;

Figure 5 shows a cross sectional view of the complete mounting system from Figure 1 in a disengaged configuration;

Figure 6 shows a cross sectional view of the complete mounting system in an engaged configuration;

Figures 7A to 7C show plan views of different collars for use in the sub-assembly of Figure 2;

Figure 8 shows a perspective view of a socket component from a sub-assembly of an alternative mounting system according to the present invention;

Figure 9 shows the socket component of Figure 8 from the opposite side; and

Figure 10 shows a perspective view of an alternative adapter for use with the sub-assembly of Figures 8 and 9.

The exploded view of Figure 1 shows the components of a representative mounting system 2 according to the present invention. The illustrated mounting system 2 is intended to be connected between a UHF RFID scanner and a portable computer terminal to provide a releasable connection between the two.

In general terms, the illustrated mounting system 2 comprises a first adapter 4, for attaching to the terminal, and a second adapter 10 for attaching to the RFID scanner. A sub assembly 100 is shown between the first adapter 4 and the second adapter 10, and provides a releasable connection between the first and second adapters 4,10 during use. The sub-assembly 100 comprises a socket 20, a spring 50 and a collar 60. Each of these components will be described more fully later.

A circular boss 6 extends from the underside of the first adapter 4. The boss 6 comprises a circumferential groove 8, on its outer surface, and internal features (not shown) to engage and locate with the socket 20 of the sub-assembly 100 during use. It should be understood that the precise form of the first adapter 4 will depend on the device that is to be attached. As illustrated, the first adapter 4 is designed to attach to a rugged mobile computer, but alternative adapters could be provided to allow the connection of a smartphone, tablet computer or other suitable mobile device.

The second adapter 10 comprises a sled part 12 for sliding onto and engaging with the upper surface of an RFID reader. A circular opening 14 with an upstanding wall 16 is provided at one end of the second adapter 10 for receiving the sub-assembly 100. Supporting features 18 are spaced around the interior surface of the upstanding wall 16 to support the sub-assembly 100 in position within the opening 14. Although a second adapter 10 is shown and described, it should be understood that the opening 14 and associated features could instead

simply be provided on the body of an RFID reader or some other component and serve the same purpose.

Figure 2 shows the sub-assembly 100 from Figure 1 inverted so that underside of the socket 20 can be seen. The socket is moulded from a suitable plastics material, and comprises a flange portion 22 and a base portion 24 with a circumferential wall 26 therebetween. Five evenly spaced slots 28 are provided through the circumferential wall 26 at the underside of the flange 22 (which is visible in the inverted view of Figure 2) to effectively provide five pillars 30 joining the flange 22 to the remainder of the circumferential wall 26. The walls 32 of each pillar 30 at the end of each slot are angled so that each slot 28 is longer at the outer surface of the wall 26 than at its inner surface. Conversely, each pillar 30 is wider at its radially inner side than at it outer side.

A small tab or wall 34 projects radially outward from one of the pillars 30 along the underside of the flange 22 to forma a locating feature for the spring 50, as will be described later. Chamfers 36 are provided around the base of the socket 20 and engagement tabs 38 are provided on the outer surface of the circumferential wall 26 to help secure the sub-assembly 100 into the opening 14. A central moulded portion 40 is also formed extending away from the base 24 to provide an upstanding boss in the finished sub-assembly 100.

The spring 50 comprises a length of spring steel, or similar, formed into a regular pentagon. Four vertices 52 of the pentagon are provided by bends in the length of wire, and the fifth 54 is formed between the two free ends 56 of the wire, which are bent out of the plane of the pentagon. The vertices 52,54 are kept rounded to provide a smooth transition between each straight wire section 58.

The collar 60 is laser cut from a circular disc of stainless steel. It has a circular outer edge 62 with a gap 64 provided to accommodate the free ends 56 of the spring 50. The inner profile 66 is generally pentagonal in shape to match the pentagonal shape of the spring 50, with straight wall sections 68 joined by rounded

corners 72. Cut-outs 74 are provided in the middle of each straight wall section 58 on the inner profile 66 of the collar 60.

Figure 3 shows the socket 20, spring 50 and collar 60 assembled into a complete subassembly 100. The vertices 52 of the spring 50 are located around the pillars 30 of the socket 20. The curved vertices 52 of the spring 50 fit around the angled walls 32 of the pillars 30 with the spring 50 is substantially undeformed. The collar 60 similarly fits snugly around the outside of the spring 50 so that the corners 72 and straight wall sections 68 of the collar 60 abut the vertices 52 and adjacent straight wire sections 58 of the spring 50. The cut-outs 74 align with the middle of each straight wire section 58 of the spring 50, and ensure that the inner profile 66 of the collar 60 is spaced from the spring 50 at these locations.

When assembled, the straight wire sections 58 of the spring 50 and parts of the straight wall sections 68 of the collar 60 pass into or through the slots 28 in the socket 20. Fitting of the spring 50 and collar 60 to the socket 20 is possible because both the spring 50 and collar 60 have inherent resilience so that the gaps 54,64 can be temporarily widened to allow both components to fit over the diameter of the circumferential wall 26 of the socket 20. Once past the larger diameter, the spring 50 and collar 60 then snap into place in the slots 28. Alignment of the components is achieved by aligning the gaps 54,64 with the tab or wall 34 on the socket. The wall 34 also ensures that the free ends 56 of the spring 50 are not forced together.

When the subassembly 100 is located in the circular opening 14 in the second adapter 10, the outer edge 62 of the collar 60 abuts the upstanding wall 16 to prevent the collar 60 from expanding. The inner profile 66 of the collar 60 therefore maintains an inwardly acting force on the spring 50 and prevents outward movement of the vertices 52 and the parts of the straight wire sections 58 that abut the collar 60. The only parts on the spring 50 that are free to move or flex are the parts of the straight wire sections 58 that align with the cut-outs 74 in the inner profile 66 of the collar 60.

Figure 4 shows the same complete subassembly 100 as it would be oriented for insertion into circular opening 14 in the second adapter 10, with the previously described central moulded portion 40 providing an upstanding boss in the centre of the socket 20. The boss 40 has upstanding walls 42 with scalloped sections 44 which cooperate, in use, with internal alignment features of the cylindrical boss 6 from the first adapter 4 to prevent rotation of the first adapter 4 relative to the socket 20.

Significantly, the straight wire sections 58 of the spring 50 protrude through the slots 28 in the socket 20 and sit proud of the internal surface 46 of the circumferential wall 26 so as to extend slightly into the interior of the socket 20. A chamfer 48 is provided at the interface between the inner surface 46 of the circumferential wall 26 and the upper surface of the flange 22.

The operation of the mounting system 2 is illustrated in Figures 5 and 6.

Figure 5 shows a cross-sectional view of the subassembly 100 located and fixed in the circular opening 14 of the second adapter 10, ready to receive the first adapter 4. At the right side of the subassembly the collar 60 can be seen resting on one the supporting features 18 and abutting the upstanding wall 16 of the second adapter. Straight wire sections 58 of the spring 50 can also be seen extending into the socket.

The circumferential groove 8 on the boss 6 of the first adapter 4 can also be seen in cross-section, and an internal space 80 to receive the upstanding boss 40 of the socket.

In Figure 6, the boss 6 of the first adapter 4 has been inserted into the socket 20. The straight wire sections 58 are engaged with the circumferential groove 8 to connect the first adapter 4 to the second adapter 10. During assembly, the boss 60 of the first adapter 4 is forced past the straight wire sections 58 of the spring 50 which deform into the spaces provided by the cut-outs 74 in the collar 60 and then snap or spring back into the circumferential groove 8. The same deformation of

the spring 50 allows the connection to break in the event of a sufficient detachment force being applied to either component.

The magnitude of the detachment force is related to the spring force, and could be modified in a number of ways. For example, the thickness of the wire used in the spring 50 could be increased or decreased, or the dimensions of the spring 50 and the slots 28 could be modified so that the straight wire sections 58 extend further or less far into the socket 20. However, these types of modifications would require several components to be changed. In the first instance, the dimensions of the slots 28 and the circumferential groove 8 would need modifying to avoid interference problems with the spring and/or ensure that a secure connection is maintained. Increased wear of components could also be encountered when the diameter of the wire does not match the size of the circumferential groove 8.

In the present invention the adjustment of the spring force can be achieved simply by modifying the internal geometry or inner profile 66 of the collar 60 without the need to modify any other components of the mounting system.

As previously noted, the cut-outs 74 provided in the collar allow movement of parts of the straight wire sections 58 of the spring during use, while the remainder of the spring 50 is prevented from moving or deforming by the surrounding collar 60. Accordingly, by changing the length of the cut-outs 74, the deformable portions of spring 50 can be made longer or shorter as desired. It will be understood that changing the deformable length of a given wire will modify its spring force.

Figures 7A to 7C show three examples of different collars 60,60',60" for use in the present invention. The dimensions of all three collars 60,60',60" are consistent, ie the outer circumference and the size of the pentagonal cut inner profile is the same in each case. However, the lengths of the cut-outs 74,74',74" is varied.

Figure 7A shows the collar 60 as seen in the previous figures. The length L1 of each cut-out 74 is 12mm, which constitutes a relatively large part of or the distance between two adjacent corners 72 of the collar. Relatively large portions

of each straight wire section 58 will therefore be free to deform within the mounting system 2 during use, leading to a fairly low spring force and a 'loose' fit with a low detachment or break-away force.

In the collar 60' of Figure 7B, the length L2 of the cut-outs 74' has been reduced to 9mm. This shortens the length of each straight wire section 58 that is free to deform, and correspondingly increases the spring force. Figure 7C shows a third collar 60" with cut-outs 74" of a still shorter length L3 of 6mm, providing a still higher spring force. Other lengths of cut-out 74,74',74" could, of course, be considered if required.

The mounting system 2 of the present invention is therefore able to provide various different break-away forces simply by selecting an appropriate collar 60 for use in the subassembly 100. No additional modification of the other components is required. This provides significant benefits in production and manufacturing costs.

The above example is presented to highlight and explain key features of the present invention. For the avoidance of doubt, the invention is not considered limited to the specific embodiment described above.

For example, the mounting system could clearly be used to join components or devices other than those described above, with little or no modification of the design, and provide all of the same benefits. As already indicated, the first and second adapters 4,10 may differ in form from those shown, and in some cases the mounting for the subassembly 100 may be provided directly on a device rather than a second adapter. The first adapter 4 could be an intermediate adapter providing a standard twist lock connector or similar should the circumstances require.

Figures 8 to 10 show and alternative socket 120 and adapter 104 forming part of a mounting system according to a second aspect of the present invention.

As in Figures 2 and 3, the underside of the socket 120 can be seen in Figure 8. The socket 120 is shown in isolation for clarity but will, in use, be combined with a spring 50 and a suitable collar 60,60',60'' to form a sub-assembly similar to that illustrated in Figure 3.

The key difference between the socket 120 shown in Figure 8 and that previously described is the inclusion of eight discrete electrical contacts 176, hereafter referred to as socket contacts 176, spaced around the circumference of the socket 120. Each socket contact 176 comprises a pin 178 extending from the underside of the socket 120 so that when the socket 120 is mounted in an opening provided on the body of a data collection device, such as an RFID reader or similar, the socket contacts 176 provide power and data connections to the device. The pins 178 are spring mounted to ensure that reliable contact with the data collection device can be maintained even when the socket 120 has to be removed, for example to change a collar 60,60',60'', and replaced.

The top of the socket 120 is shown in Figure 9. The eight discrete socket contacts 176 are shown on the base/floor of the cavity 180 provided between the boss 140 and the internal surface 146 of the circumferential wall 126 of the socket 120, and will thus be exposed when the socket 120 is mounted to the body of a data collection device.

The adapter 104 shown in Figure 10 takes the form of a case or casing for a smartphone. The interior of the casing 104 is provided with an integrally formed standard micro USB connector allowing the casing 104 to form a connection with a particular mobile phone for data and power transfer between the phone and the casing.

It will be understood that casings 104 for other mobile computers or communications devices such as tablets, PDAs or similar, comprising appropriately positioned connectors of an appropriate type, could equally be provided. Indeed, it is envisaged that a variety of casings 104 could be provided to accommodate different devices. The connectors may be integrally formed in a

suitable location on the interior of the casing 104, to provide a clean overall package without externals wires or leads, or may be provided on a wire, cable or similar, to allow a single case 104 to accommodate a variety of different devices.

Within the casing 104 the individual contact points of the micro USB connector are connected to eight discrete casing contacts 186 provided on a circular boss 106 which is otherwise similar to the circular boss 6 described in the previous embodiment. The use of discrete contact points allows a dedicated casing contact 186 and socket contact 176 pairs for a particular type of transmission. For example, four contact pairs 176,186 could be assigned to USB data transfer, two pairs could be assigned to charging/power transfer and one or two pairs could be included to sense the presence of a connection between the casing 104 and the socket 120 and/or the presence of a smartphone or similar device.

The three upstanding walls 142 and three scalloped sections 144 provided on the boss 140 of the socket 120 act as alignment features to ensure correct alignment of the socket contacts 176 with the corresponding casing contacts 186. The shaping of the boss 140 of the socket and corresponding internal alignment features 188 provided on the boss 106 of the adapter 104 mean that only three possible orientations of the adapter 104 are possible. Only one of these orientations will also align the adapter 104 with the data collection device, so a user can be confident that the pairs of contacts 176,186 are correctly aligned.

As previously suggested, it is commonplace to rely on wireless data communication between a data collection device and a peripheral such as a smartphone or portable computer. One reason for this is simply to avoid the additional step of connecting a cable or other physical data transfer medium between the devices. However, a further consideration is that connectors of this type provide another physical connection between the devices which is not typically designed to break-away. Therefore, including a separate physical connector risks damage to the connector and, more relevantly, increases the risk of damage to one or both connected devices during an impact.

Despite this, the use of wireless data transfer has certain drawbacks. For example, 'pairing' of devices wirelessly can prove problematic, particularly in environments or situations where a large number of wireless devices are being used simultaneously.

By incorporating data transfer contacts into a break-away connector, for example as described above, the above-mentioned problems are overcome. The socket 120 and boss 106 interact as previously described to provide a force-limited connection. Data transfer connections between relevant pairs of contacts 176,186 are automatically established when the force-limited connection is formed, and the data connection is cleanly broken in the event of any impact that is sufficient to break the physical connection. The pairs of contacts 176,186 are fully protected by the interface of the socket 120 and boss 106 during use. Even in the event of the connector breaking away, the socket contacts 176 are protected by their recessed position within the cavity 180.

Another drawback of relying on a solely wireless connection between two separate battery operated devices is that the devices need to be charged separately. The present invention can also overcome this problem by allowing for provision of an electrical connection through a break-away connector to allow power transfer between two devices. The devices, once physically joined together, can then be charged simultaneously though a single charging point, such as a charging cradle.

One problem with providing an electrical connection or link between the devices is that the data collection device can tend to draw power from a smartphone or similar through the connection. This is because peripheral or 'slave' device connected to the USB port of a host device such as a smartphone or PDA will typically draw current from the host device. Ordinarily, the slave device (for example a card reader) will require only a small amount of power. However, the power drain from the data collection device considered in the present invention will generally be far larger, so power transfer of this type can result in rapid depletion of a smartphone or PDA battery.

To manage this problem power management hardware is provided within the casing 104 as illustrated in Figure 10. In brief, a microprocessor and/or circuitry within the casing 104, schematically indicated at 190, allows the host device to determine when a data collection device is connected, and then control the transfer of power between the devices to prevent the flow of power from the smartphone or other host device to the data collection device.

The power management hardware 190 can also ensure that power flow from the data collection device to a smartphone or PDA occurs only during charging. As discussed above, there is a benefit to allowing both devices to charge simultaneously from a single input. However, during use, it may be preferable that each device operates independently from its own power supply, so that the battery life of one devices is not compromised by the other. Therefore, as soon as the devices are removed from a charging cradle, or otherwise disconnected from an external power source, the transfer of power between the data collection device and the smartphone or other connected device can be prevented by the power management hardware 190, and each device then simply relies on its own battery. The detection of charging could be realised using one or more spare contact pairs 176,186 not assigned to data or power transfer.

The power management hardware 190 may also manage the charging process so that different voltages and currents can be applied to each device as required.

In the preferred embodiment, the majority of the components of the mounting system are formed from plastics materials, with a steel spring and stainless steel collar. However, other suitable materials would be known to a skilled reader and could be substituted if desired.

Instead of providing the collars 60,60',60" with different lengths of cut-out 74,74',74" as illustrated in Figures 7A to 7C, it may be possible to alter the depths of the cut-outs 74,74',74" or make the inner dimensions of the collars 60,60',60" slightly larger or smaller to provide the different spring forces as required. Alternatively, the straight wall sections 68 could be modified to angle inwards from

the corners 72, and the different spring forces could be achieved by adjusting the angle of the wall sections 68. A combination of these various approaches could also be used.

Although envisaged and described as a complete mounting system 2 which will be provided for particular requirements, it is also possible that a package could be provided with a selection of collars to allow a customer to adjust the break-away force for different applications.

CLAIMS:

1. A mounting system providing a force-limited connection between first and second components, the mounting system comprising a recess and a resilient member receivable in the recess to form the connection, wherein the resilient member is deformable against a spring force to remove the resilient member from the recess and break the connection, and wherein a resistant member is provided adjacent the resilient member to modify the spring force provided by the resilient member.

2. A mounting system according to claim 1, wherein the resistant member abuts the resilient member in one or more locations to prevent deformation of the resilient member at those locations.

3. A mounting system according to claim 2, wherein the resilient member comprises a length of resilient material and the resistant member abuts a first section of the length of resilient material and is spaced from a second section of the length of resilient material.

4. A mounting system according to claim 3, wherein the resistant member comprises a wall section with a cut-out to space a part of the resistant member from the second section of the length of resilient material.

5. A mounting system according to claim 4, wherein the resistant member is exchangeable for an alternative resistant member with a differently sized cut-out.

6. A mounting system according to any of the preceding claims, wherein the resilient member comprises a wire.

7. A mounting system according to claim 6, wherein the wire comprises spring steel.

8. A mounting system according to any of the preceding claims, wherein the recess is a groove provided around the periphery of a first component and the resilient member forms a substantially closed loop to engage with the groove at more than one location.

9. A mounting system according to claim 8, wherein the resilient member comprises a plurality of straight sections.

10. A mounting system according to claim 9, wherein a part of each straight section of the resilient member protrudes through a slot provided in a socket located inside the resilient member.

11. A mounting system according to any of claims 8 to 10, wherein the resistant member comprises a collar surrounding the resilient member.

12. A mounting system according to claim 11, wherein the collar has an inner profile comprising a plurality of straight wall sections each having a generally centrally positioned cut-out.

13. A mounting system according to claim 12, wherein the length of each cut-out is 12mm.

14. A mounting system according to claim 12, wherein the length of each cut-out is 9mm.

15. A mounting system according to claim 12, wherein the length of each cut-out is 6mm.

16. A mounting system according to any of claims 11 to 15, wherein the collar is a laser cut part.

17. A mounting system according to any of claims 11 to 16, further comprising an electrical contact.

18. A mounting system according to any of claims 1 to 10, further comprising an electrical contact.

19. A mounting system providing a force-limited connection between first and second components, comprising an electrical contact providing an electrical connection between the first and second components when the force-limited connection is formed.

20. A mounting system according to any of claims 17 to 19, wherein a plurality of discrete electrical contacts are provided.

21. A mounting system according to claim 20, wherein at least one of the plurality of discrete electrical contacts provides data transfer between the first and second components.

22. A mounting system according to claim 20 or 21, wherein at least one of the plurality of discrete electrical contacts provides power transfer between the first and second components.

23. A mounting system according to claim 22, further comprising control circuitry to control the power transfer between the first and second components.

24. A mounting system according to claim 23, wherein the control circuitry permits power transfer between the first and second components only when one of the first and second components is connected to an external power supply.

25. A mounting system according to claim 23 or 24, wherein the control circuitry permits power transfer in only one direction between the first and second components.

26. A mounting system according to any of the preceding claims, further comprising internal alignment features that limit the possible orientations of the first component relative to the second component.

27. A mounting system according to any of the preceding claims, wherein the first component is an adapter for receiving a portable computer or tablet.

28. A mounting system according to any of claims 1 to 26, wherein the first component is an intermediate adapter providing a standard connector.

29. A mounting system according to any of claims 1 to 26, wherein the first component is a portable computer.

30. A mounting system according to any of the preceding claims, wherein the second component is an adapter for connection to an RFID reader.

31. A mounting system according to any of claims 1 to 29, wherein the second component is an RFID reader.

32. A collar for a mounting system according to any of claims 11 to 17.

33. A kit comprising a plurality of collars according to claim 32, each collar having a plurality of wall sections each with a generally centrally positioned cut-out, wherein at least two collars within the kit have different length cut-outs.

34. A kit according to claim 33, further comprising a mounting system according to any of claims 11 to 17.

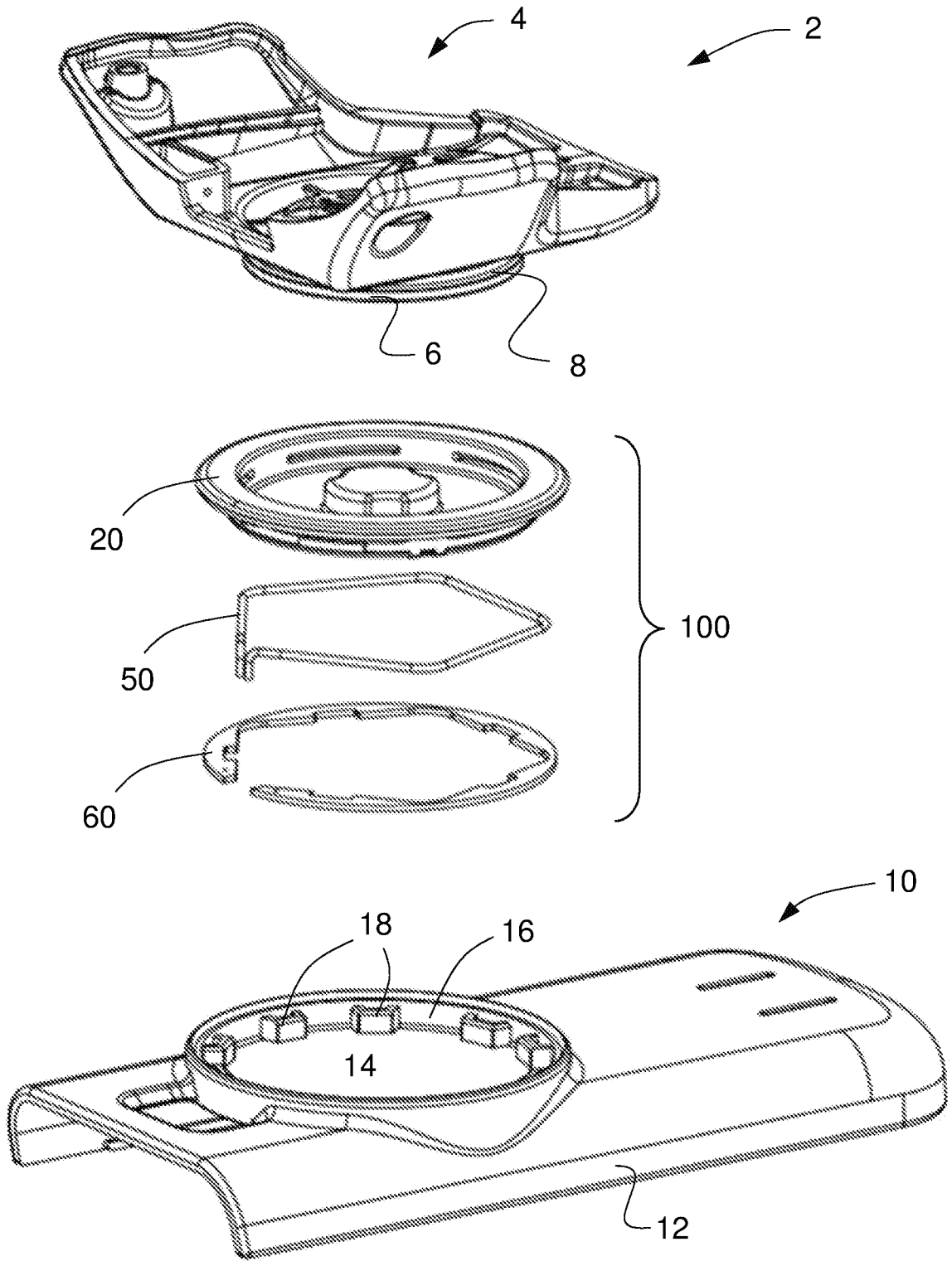

Figure 1

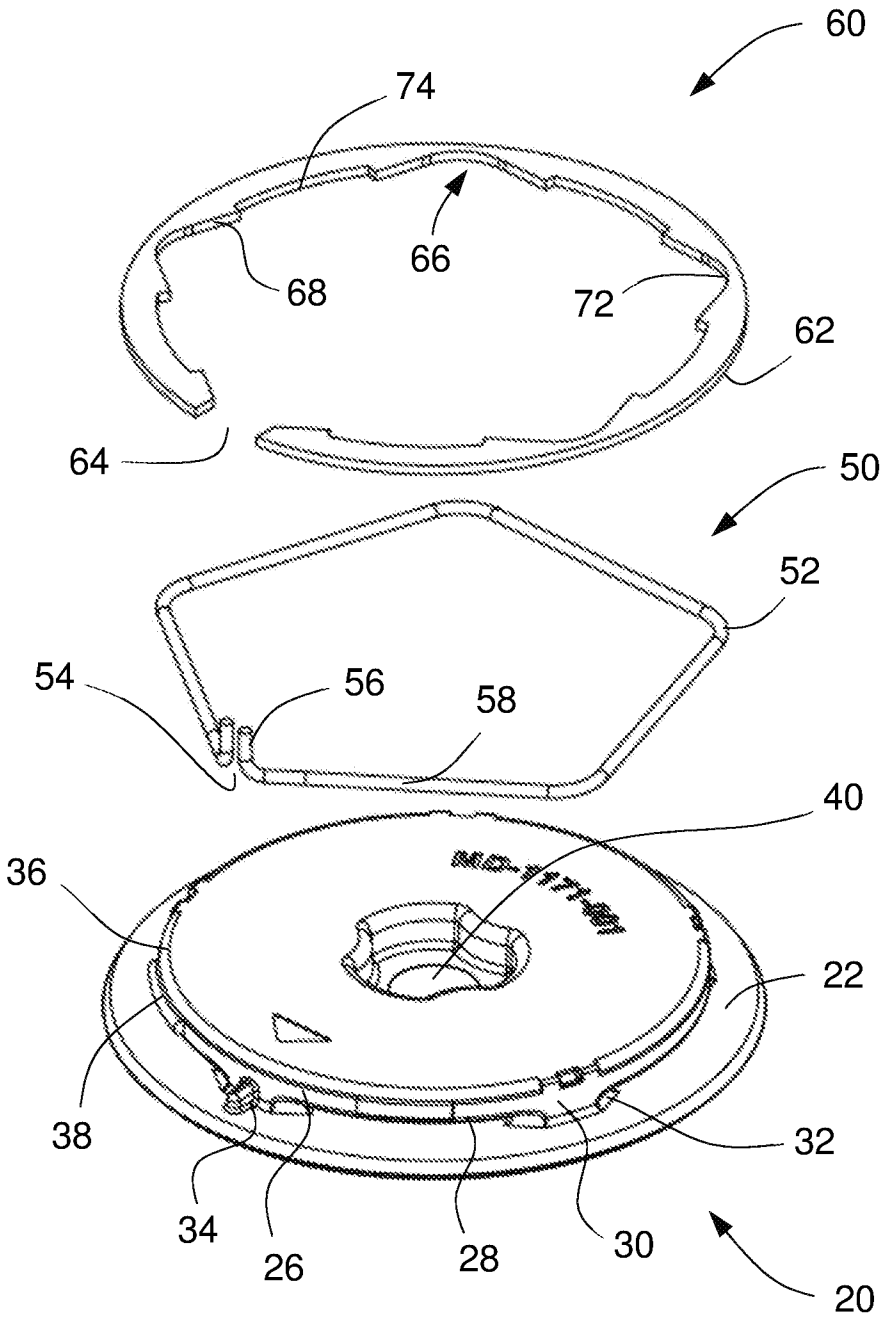

Figure 2

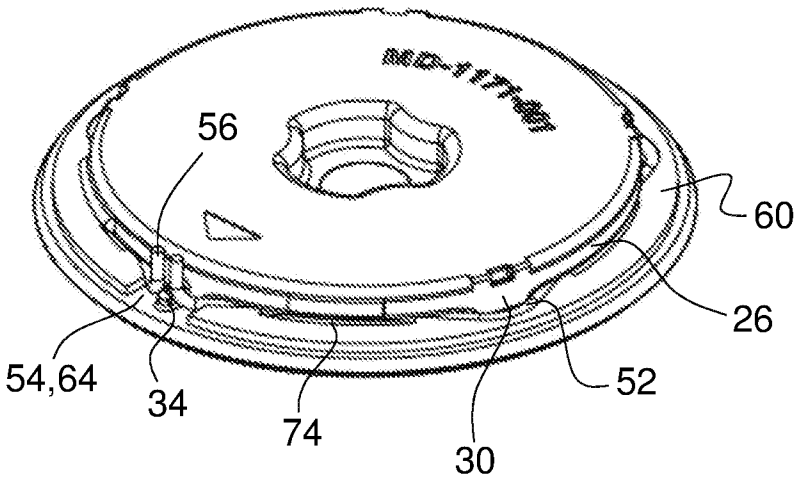

Figure 3

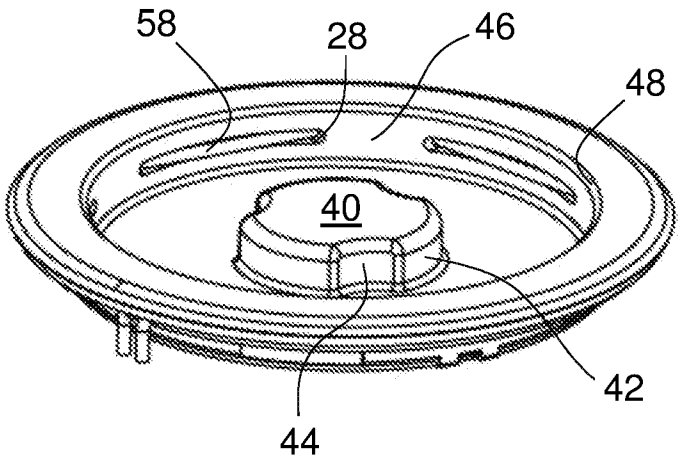

Figure 4

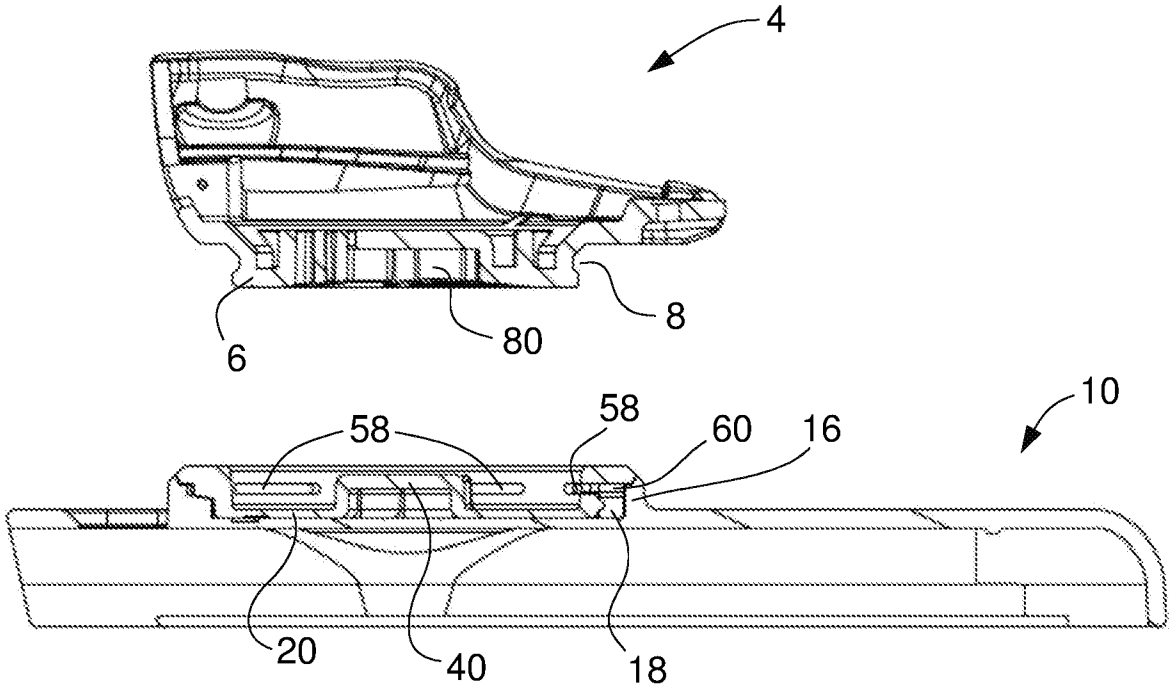

Figure 5

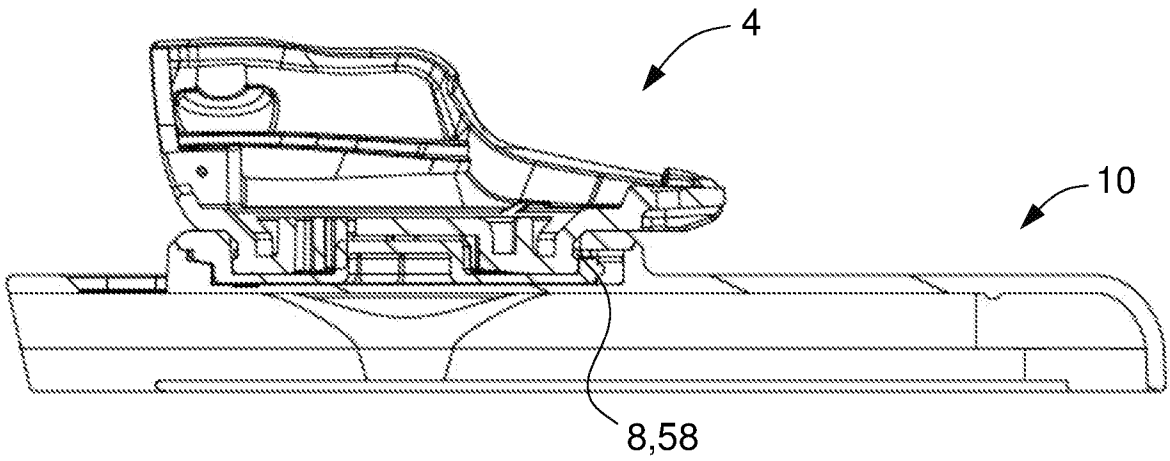

Figure 6

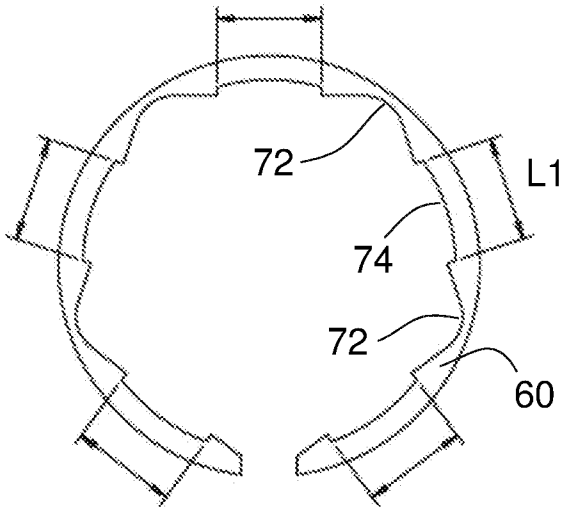

Figure 7A

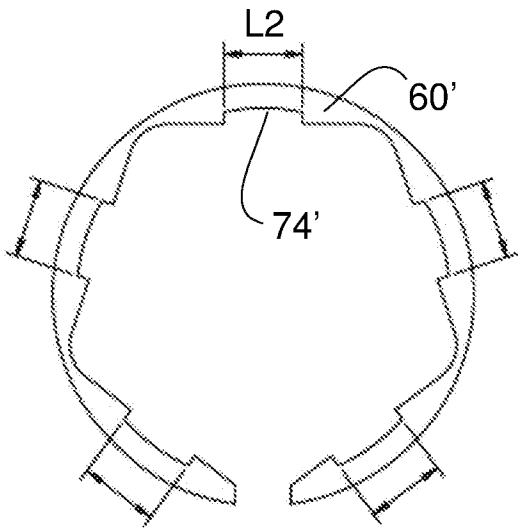

Figure 7B

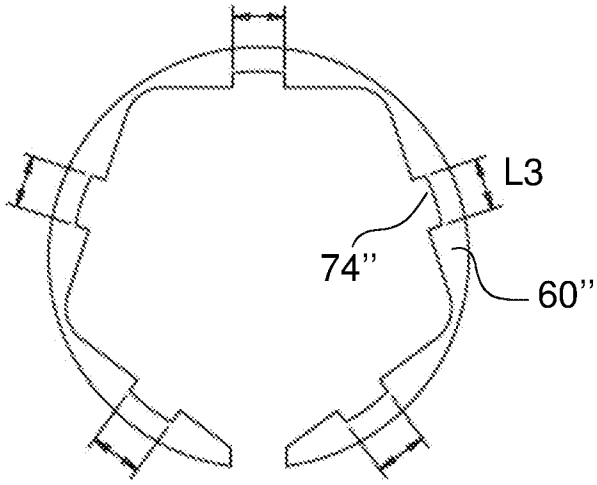

Figure 7C

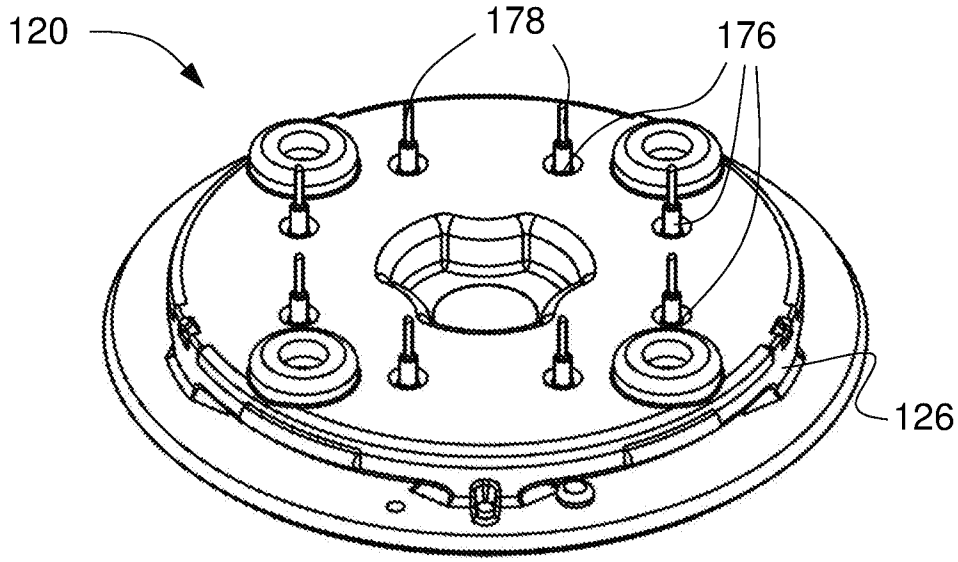

Figure 8

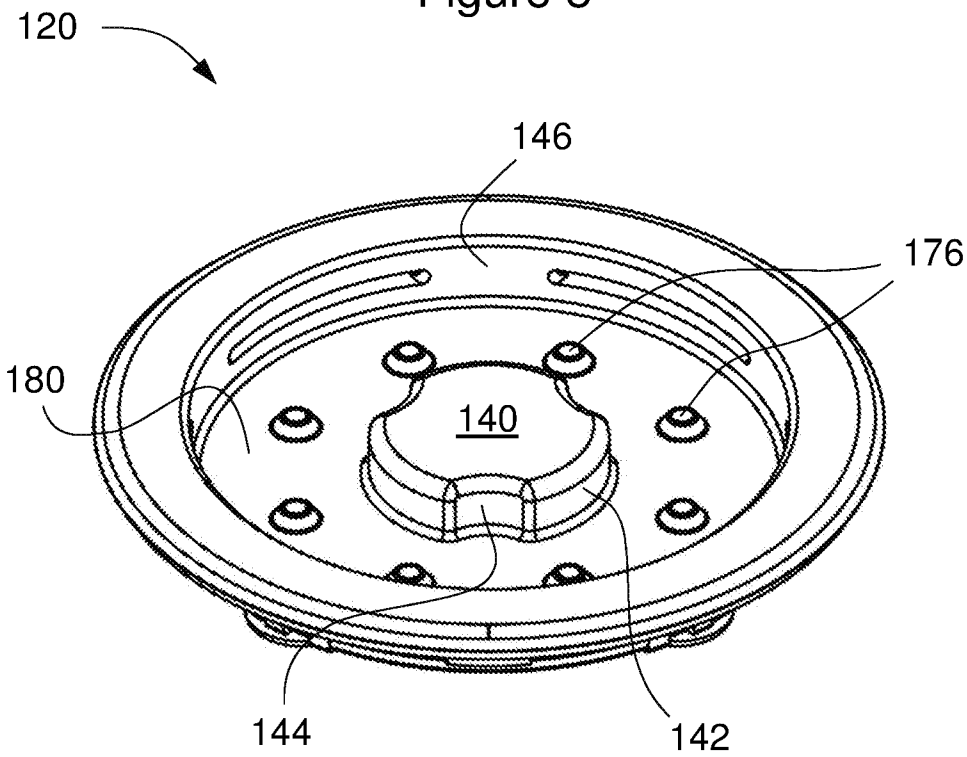

Figure 9

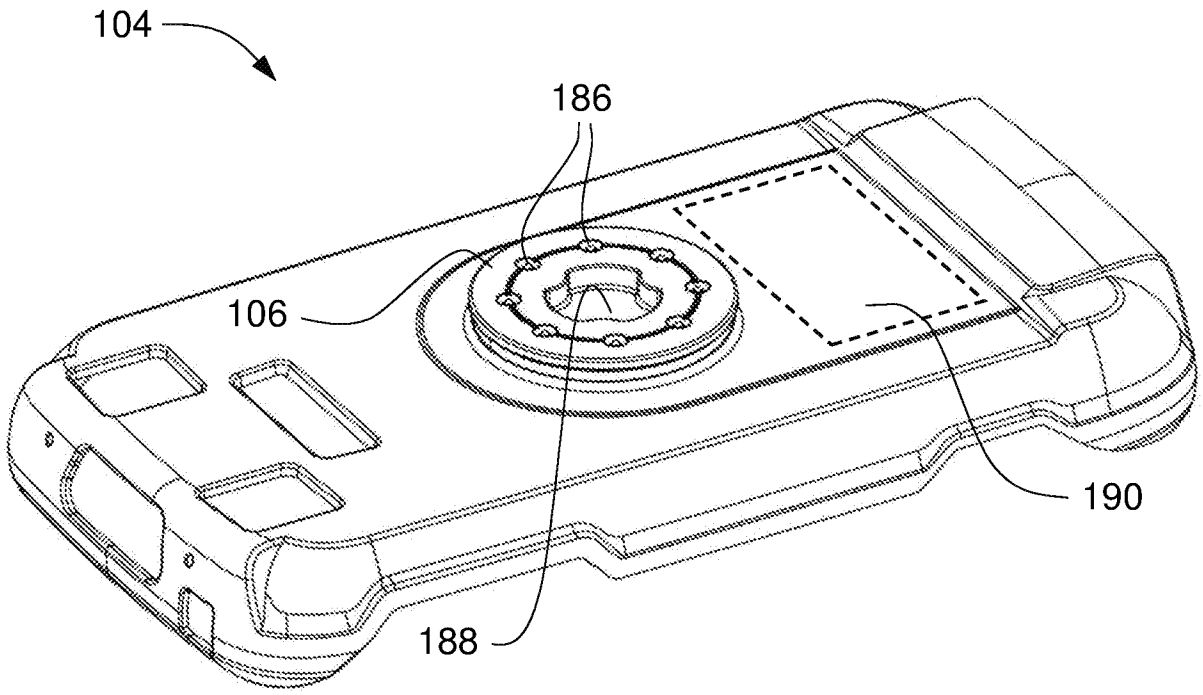

Figure 10

INTERNATIONAL SEARCH REPORT

International application No
PCT/GB2017/051165

A. CLASSIFICATION OF SUBJECT MATTER
INV. F16B21/18 H01R13/46 H01R13/627 H01R13/64 H01R24/86
F16B21/07 H01R107/00
ADD. G06K7/00
According to International Patent Classification (IPC) or to both national classification and IPC

B. FIELDS SEARCHED

Minimum documentation searched (classification system followed by classification symbols)
F16B H01R B29C A61M F16L G06K

Documentation searched other than minimum documentation to the extent that such documents are included in the fields searched

Electronic data base consulted during the international search (name of data base and, where practicable, search terms used)
EPO-Internal, WPI Data

C. DOCUMENTS CONSIDERED TO BE RELEVANT

Category*	Citation of document, with indication, where appropriate, of the relevant passages	Relevant to claim No.
X	DE 10 2008 058705 A1 (LUK LAMELLEN & KUPPLUNGSBAU [DE]) 25 June 2009 (2009-06-25) figures	1-3
X	EP 2 733 366 A2 (BAL SEAL ENG CO INC [US]) 21 May 2014 (2014-05-21) paragraphs [0038], [0041]; figures	1,2,6-8, 11,26-32
X	WO 2014/085825 A1 (BAL SEAL ENGINEERING INC [US]; FREDERICK JEFF [US]; CHANGSRIVONG DEREK) 5 June 2014 (2014-06-05) figures 1-1E	1-5,33, 34
X	EP 2 458 231 A1 (BAL SEAL ENGINEERING CO [US]) 30 May 2012 (2012-05-30) figures	1,8-11

-/--

[X] Further documents are listed in the continuation of Box C.

[X] See patent family annex.

* Special categories of cited documents :

"A" document defining the general state of the art which is not considered to be of particular relevance

"E" earlier application or patent but published on or after the international filing date

"L" document which may throw doubts on priority claim(s) or which is cited to establish the publication date of another citation or other special reason (as specified)

"O" document referring to an oral disclosure, use, exhibition or other means

"P" document published prior to the international filing date but later than the priority date claimed

"T" later document published after the international filing date or priority date and not in conflict with the application but cited to understand the principle or theory underlying the invention

"X" document of particular relevance; the claimed invention cannot be considered novel or cannot be considered to involve an inventive step when the document is taken alone

"Y" document of particular relevance; the claimed invention cannot be considered to involve an inventive step when the document is combined with one or more other such documents, such combination being obvious to a person skilled in the art

"&" document member of the same patent family

Date of the actual completion of the international search	Date of mailing of the international search report
4 October 2017	12/10/2017

Name and mailing address of the ISA/	Authorized officer
European Patent Office, P.B. 5818 Patentlaan 2 NL - 2280 HV Rijswijk Tel. (+31-70) 340-2040, Fax: (+31-70) 340-3016	Esmiol, Marc-Olivier

INTERNATIONAL SEARCH REPORT

International application No
PCT/GB2017/051165

C(Continuation). DOCUMENTS CONSIDERED TO BE RELEVANT

Category*	Citation of document, with indication, where appropriate, of the relevant passages	Relevant to claim No.
X	US 2007/026703 A1 (TAGA MASAYUKI [JP] ET AL) 1 February 2007 (2007-02-01) figures	1,8, 11-16
X	US 2004/017077 A1 (VYSE GERRARD N [US] ET AL) 29 January 2004 (2004-01-29) figures	1
X	US 5 882 044 A (SLOANE NORMAN S [US]) 16 March 1999 (1999-03-16) figures	1
X	US 9 004 543 B2 (BONGIORNI JEAN-BAPTISTE [FR] ET AL) 14 April 2015 (2015-04-14) figures	1
X	EP 1 081 801 A2 (IMS CONNECTOR SYSTEMS GMBH [DE]) 7 March 2001 (2001-03-07) figures 1-2	1,8,11, 17-19
X	EP 2 362 492 A1 (ITT MFG ENTERPRISES INC [US]) 31 August 2011 (2011-08-31) figures 3-5	19-26,28

INTERNATIONAL SEARCH REPORT

International application No.
PCT/GB2017/051165

Box No. II Observations where certain claims were found unsearchable (Continuation of item 2 of first sheet)

This international search report has not been established in respect of certain claims under Article 17(2)(a) for the following reasons:

1. ☐ Claims Nos.:
because they relate to subject matter not required to be searched by this Authority, namely:

2. ☐ Claims Nos.:
because they relate to parts of the international application that do not comply with the prescribed requirements to such an extent that no meaningful international search can be carried out, specifically:

3. ☐ Claims Nos.:
because they are dependent claims and are not drafted in accordance with the second and third sentences of Rule 6.4(a).

Box No. III Observations where unity of invention is lacking (Continuation of item 3 of first sheet)

This International Searching Authority found multiple inventions in this international application, as follows:

see additional sheet

1. ☒ As all required additional search fees were timely paid by the applicant, this international search report covers all searchable claims.

2. ☐ As all searchable claims could be searched without effort justifying an additional fees, this Authority did not invite payment of additional fees.

3. ☐ As only some of the required additional search fees were timely paid by the applicant, this international search report covers only those claims for which fees were paid, specifically claims Nos.:

4. ☐ No required additional search fees were timely paid by the applicant. Consequently, this international search report is restricted to the invention first mentioned in the claims; it is covered by claims Nos.:

Remark on Protest

☐ The additional search fees were accompanied by the applicant's protest and, where applicable, the payment of a protest fee.

☐ The additional search fees were accompanied by the applicant's protest but the applicable protest fee was not paid within the time limit specified in the invitation.

☒ No protest accompanied the payment of additional search fees.

FURTHER INFORMATION CONTINUED FROM PCT/ISA/ 210

This International Searching Authority found multiple (groups of) inventions in this international application, as follows:

1. claims: 1-16, 26-34

A mounting system wherein the resilient member comprises a length of resilient material and the resistant member abuts a first section of the length of resilient material and is spaced from a second section of the length of resilient material.
The problem solved by this feature can be said to be to find an alternative way of adjusting the resilient/spring force (see the application, page 3, par. 3)

---

2. claims: 17-25

A mounting system comprising an electrical contact providing an electrical connection or comprising an electrical contact between the first and second components
The problem solved by this feature can be said to provide an electrical connection between two components.

INTERNATIONAL SEARCH REPORT

Information on patent family members

International application No
PCT/GB2017/051165

Patent document cited in search report	Publication date	Patent family member(s)	Publication date
DE 102008058705 A1	25-06-2009	NONE	
EP 2733366 A2	21-05-2014	EP 2733366 A2	21-05-2014
		US 2014130329 A1	15-05-2014
WO 2014085825 A1	05-06-2014	EP 2926416 A1	07-10-2015
		US 2014162487 A1	12-06-2014
		WO 2014085825 A1	05-06-2014
EP 2458231 A1	30-05-2012	EP 2458231 A1	30-05-2012
		EP 3078865 A1	12-10-2016
		JP 6021318 B2	09-11-2016
		JP 2012115676 A	21-06-2012
		US 2012134742 A1	31-05-2012
		US 2014119819 A1	01-05-2014
US 2007026703 A1	01-02-2007	JP 4644063 B2	02-03-2011
		JP 2007032673 A	08-02-2007
		US 2007026703 A1	01-02-2007
US 2004017077 A1	29-01-2004	AU 2003253839 A1	09-02-2004
		US 2004017077 A1	29-01-2004
		US 2005151370 A1	14-07-2005
		WO 2004010041 A1	29-01-2004
US 5882044 A	16-03-1999	JP 2000504092 A	04-04-2000
		US 5882044 A	16-03-1999
		WO 9728396 A1	07-08-1997
US 9004543 B2	14-04-2015	BR 102012030994 A2	29-10-2013
		CA 2797517 A1	06-06-2013
		CN 103148296 A	12-06-2013
		EP 2602531 A1	12-06-2013
		FR 2983556 A1	07-06-2013
		JP 6088228 B2	01-03-2017
		JP 2013177964 A	09-09-2013
		PL 2602531 T3	31-08-2017
		US 2013140808 A1	06-06-2013
EP 1081801 A2	07-03-2001	DE 19942065 A1	19-04-2001
		DE 50011423 D1	01-12-2005
		EP 1081801 A2	07-03-2001
EP 2362492 A1	31-08-2011	EP 2362492 A1	31-08-2011
		GB 2477987 A	24-08-2011
		US 2011207360 A1	25-08-2011