Jan. 31, 1950 R. W. JOHNSON 2,496,214

PILOT FUEL FLOW CONTROL

Filed July 8, 1944

Fig. 1.

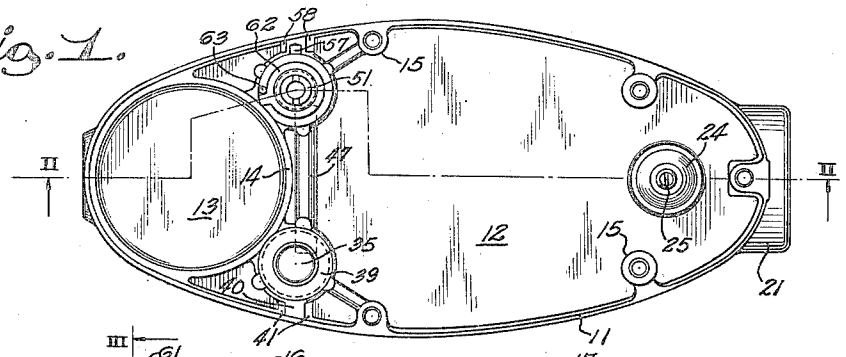

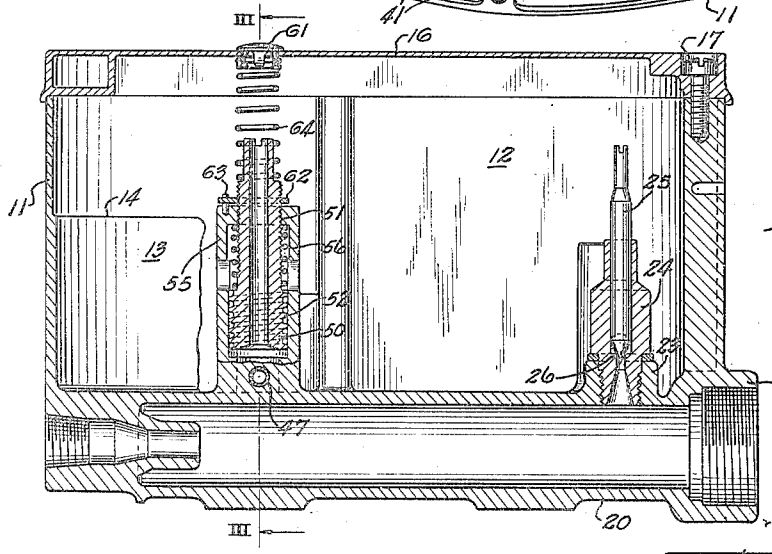

Fig. 2.

Fig. 5.

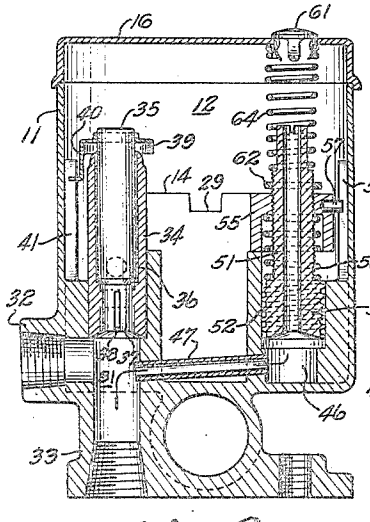

Fig. 3.

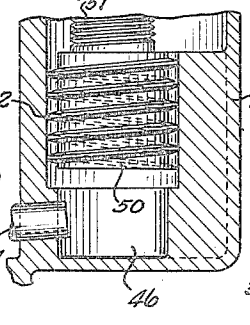

Fig. 4.

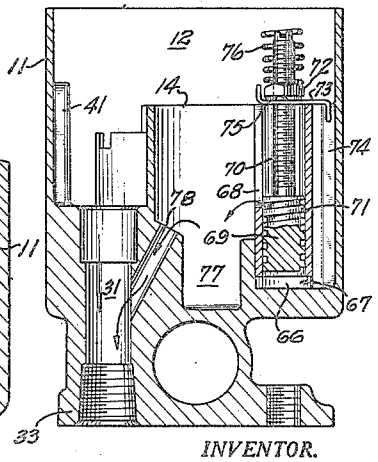

INVENTOR.
ROY W. JOHNSON
BY John W. Michael
ATTORNEY.

Patented Jan. 31, 1950 2,496,214

UNITED STATES PATENT OFFICE

2,496,214

PILOT FUEL FLOW CONTROL

Roy W. Johnson, Milwaukee, Wis.

Application July 8, 1944, Serial No. 544,055

9 Claims. (Cl. 137—21)

1

This invention relates to improvements in devices for controlling the flow of fuel oil from a reservoir to a burner of the gravity feed type and particularly to means controlling the supply of oil to the pilot flame of such burner.

Devices of the character to which the present invention relates are known to the art as shown for example in Patent 2,120,364, issued to Roy W. Johnson on June 14, 1938. In such devices an inlet valve actuated by a float controls the flow of oil to maintain a substantially constant level of oil in a chamber. Oil flows from the chamber to one or more burners under the control of a metering valve or valves adjustable manually and/or thermostatically.

A pilot flame must be kept constantly burning to provide for ignition of the oil supplied to the main burner so that oil must be constantly supplied to the pilot flame regardless of the position of the valve for metering the flow of oil to the main burner. The volume of oil flowing to the burner is varied by temperature changes or changes in the composition of the oil itself and means must therefore be provided for adjusting the flow of fuel to the pilot to compensate for such changes. A passage of relatively small cross sectional area can be used to control the flow of pilot fuel if means are provided to vary the effective length of such passage. It is desirable, however, that the entire length of the passage be readily accessible for cleaning out material depositing from the oil and be easily readjustable to the exact length required to compensate for temperature and/or composition changes in the oil.

It is therefore an object of the invention to provide means which may be readily adjusted to compensate for changes in the flow of oil to the pilot flame or burner of an oil burner.

Another object of the present invention is to provide a device for controlling the flow of fuel oil to a pilot flame or pilot burner to secure the desired volume of oil regardless of changes in the characteristics of the oil.

Another object of the invention is to control the flow of oil during pilot operation of a burner by means of a passage of relatively small cross-sectional area, or so-called capillary passage, of which the effective length may be readily adjusted and which may easily be kept free from materials depositing from the oil.

Another object of the invention is to provide a capillary passage for controlling the flow of oil to a burner for pilot operation in which a part of the means forming the passage may be removed for cleaning without disturbing adjustment of the device for either its control of flow for main flame or pilot flame operation of the burner.

Objects and advantages other than those above set forth will be apparent from the following

2

description when read in connection with the accompanying drawings, in which:

Fig. 1 is a top plan view of a constant level oil control device embodying the present invention with all of the parts not essential to disclosure of the present invention omitted therefrom;

Fig. 2 is a vertical cross-sectional view taken on the plane of the broken line II—II of Fig. 1;

Fig. 3 is a vertical sectional view taken on the plane of the line III—III of Fig. 2;

Fig. 4 is an enlarged fragmentary view of the structure forming a capillary passage between the casing chamber and a portion of the outlet passage therefrom, in a constant level oil flow control device; and

Fig. 5 is a vertical sectional view similar to that shown in Fig. 3 but illustrating a modified embodiment of the present invention.

Referring more particularly to the drawings by characters of reference, numeral 11 designates a casing divided substantially into a main chamber 12 and an auxiliary chamber 13 by a partition or dam 14 having its crest slightly above the normal level of the oil to be maintained in the main chamber. The casing is formed with ears 15 for attachment thereto of a cover 16 by suitable means such as screws 17. A fuel supply conduit 20 is preferably formed integral with the casing 11 and is provided with a nipple 21 by which a pipe connection with a reservoir for fuel (not shown) may be made. The conduit 20 is adapted to receive a suitable filter such as is shown for example in the above patent.

An opening is formed in a thickened portion 23 in the wall between the main chamber 12 and the conduit 20 and is internally threaded to receive a valve casing or body 24 which is formed with an axial passage and transverse passages providing for communication between the conduit 16 and the chamber 12 under the control of a valve 25. The valve 25 is preferably formed as a needle having a beveled end seating on a shoulder 26 formed in the valve body 24 and preferably adjacent the juncture of the axial and transverse passages therein. The valve 25 controls the flow of fuel oil from the conduit 20 in such manner as to maintain a substantially constant level of oil in the chamber 12 in response to the movement of a float and other means such as shown in the above patent. If the inlet valve 25 sticks open for any reason whatever, the level of oil in the main chamber 12 rises and the oil flows through a notch 29 in the dam 14 into the auxiliary chamber 13 to release a latch mechanism disclosed in the above identified patent, which positively closes the inlet valve 25.

The casing 11 is provided with a passage 31 terminating in nipples 32 and 33 to which pipes may be connected for severally supplying fuel oil to a burner or burners (not shown). It will be

understood that when only one burner is to be supplied, the nipple not used is closed by a suitable plug. A valve casing or body 34 is inserted in one end of passage 31 and is formed with both axial and transverse passages through which oil may flow under the control of a valve 35. The valve 35 seats on a shoulder 36 formed in the valve body 34 and is formed with a tubular portion 37 extending beyond the seat and provided with slots 38 for the purpose of allowing precise metering of the quantity of oil supplied to the main burner. The valve 35 has mounted thereon a collar 39 having a finger 40 extending therefrom and engaged between guide ribs 41 on a wall of casing 11.

Fuel is supplied for pilot operation of the main burner from the main chamber 12 by way of a conduit by-passing the metering valve 35 and flows through such by-pass independently of the action of the metering valve 35. As shown in Fig. 3, a well 46 is formed in one side of the casing 11 and is connected at its lower end with the outlet passage 31 beyond the outlet valve seat 36 by tubing 47. It will be seen from the drawings that the well 46 is within the main chamber 12 of the device and that oil may accordingly flow through such well and the tubing 47 to the outlet passage 31 except as such flow is controlled by a plug having a portion 50 and a portion 51. The plug portion 50 seats in the well 46 and blocks off flow of oil therethrough except for such oil as may flow through a groove on the plug portion 50 and extending from the upper edge of the well to the lower end of the plug portion. The groove in the plug portion 50 is shown as being formed by a relatively coarse thread 52 which fits closely into the well 46 so that the outside diameter of the thread in cooperation with the wall of the well defines a passage of relatively small cross-sectional area or a capillary passage which allows flow of oil from the chamber 12 through the well 46 at a rate dependent on the effective length of the passage, that is the length of the thread which is within the well itself.

The plug portion 51 is of less diameter than the plug portion 50 and is threaded to engage with an adjusting nut 55 seating on the wall forming the well 46 and forming a seat for one end of a compression spring 56 having its other end seated on the shoulder formed by the juncture of the plug portions 50 and 51. Rotation of the nut 55 is limited by a pin 57 extending from the nut and engaging with a rib 58 on the casing side wall. The position of the plug 50—51 in the well 46 is adjusted by rotation of the plug in the nut by means of a suitable tool engaging the slotted upper end of the plug through a hole in the cover 16, which is normally closed by a button 60. Rotation of the plug is limited by a collar 62 which is threaded on the plug portion or stem 51 and contacts on the nut 55 when the plug is in position to secure the maximum effective length of the capillary passage. The collar 62 has an ear engaging a stop 63 to limit rotation of the collar. The entire plug is held in adjusted position by a spring 64 seated between a shoulder on the plug stem 51 and the cover 16. The plug 50—51 is formed with an axial passage therethrough to vent any gas released from the oil in the capillary by-pass and thus prevents so-called "binding" of the by-pass.

In the use of the device, oil flows from the chamber 12 beneath a portion of the nut 55 and enters the capillary passage defined by the thread

52 and the wall of the well 46. Oil flows downwardly through the capillary passage, as indicated by the arrows, into the well 46 and thence through the tube 47 to the outlet passage 31. The amount of oil flowing through the above path is determined by fluid friction on the walls and hence by the length of the capillary passage which is readily adjusted merely by turning the plug to increase or decrease the length of the groove formed by the thread within the well. If the capillary passage becomes partially or wholly clogged, removal of the cover 16 and the spring 64 allows the plug 50—51 to be lifted out of the well 46 for cleaning. It will be seen that the entire area and length of the capillary passage is then exposed and can be thoroughly cleaned. If care is taken that the nut is not turned during the cleaning operation, replacement of the cleaned plug in the well with the pin 57 between the rib 58 avoids any necessity for readjustments not required by temperature or oil composition changes.

The structure shown in Fig. 5 is generally similar to and functions in a manner generally similar to that shown in Fig. 3 excepting that the oil flows upwardly through the capillary passage. In the modified structure, a well 66 is formed with an inlet 67 and an outlet 68. A solid plug with portions 69 and 70 is provided on its portion 69 with a coarse thread 71 fitting into the well and, in combination with the well, defines a capillary passage of which the effective length may be determined by positioning the plug portion 69 relative to the outlet 68. An adjusting nut 72 is threaded on the plug stem portion 70 and engages a locking bar 73 which is preferably guided in its movements by ribs 74 on the casing wall. A lock washer 75 contacts both the nut 72 and the locking bar 73 and prevents accidental movement of the plug under the influence of a spring 76 between the nut and the cover. The oil flowing through the capillary passage is discharged into a sump 77 formed in the casing adjacent the well 66 and from there flows through the sump outlet 78 into the casing outlet passage 31.

It will be seen that the present invention provides a structure in which a capillary passage by-passes the main flame flow control valve for a liquid fuel burner, thus providing for continuous flow of fuel to the burner during the pilot portion of its cycle. The inlet and the discharge ends of the capillary passage are both below the level of the fuel maintained in a supply chamber so that the volume of fuel flowing through the passage is variable merely by varying the effective length of the passage. Such variation is obtained merely by adjusting the position of a grooved plug in a well, both the plug and the wall of the well being required to define the capillary passage. The position of the plug is readily adjustable in operation to adapt the device to any flow characteristics of the oil, or any changes therein, and the plug is readily removable to expose the entire area and length of the groove for maintenance of the initial cross-sectional area and the original frictional characteristics of the groove wall. And the plug is readily replaced without disturbing the adjustment of the metering valve or change in the setting of the by-pass.

Although but two embodiments of the present invention have been illustrated and described, it will be apparent to those skilled in the art that various changes and modifications may be made therein without departing from the spirit of the

invention or from the scope of the appended claims.

I claim:

1. In a device controlling the flow of liquid fuel to a burner of the gravity feed type, a casing having a fuel supply chamber provided with an outlet passage and a well connected with the chamber and the passage, and a plug mounted in the well for axial movement therein and defining with a portion of the wall of the well a capillary passage therewith for maintaining a continuous and limited flow of fuel to the burner, and means for axially adjusting the plug within the well to vary the effective length of the capillary passage.

2. In a device controlling the flow of liquid fuel to a burner of the gravity feed type, a casing having a chamber with an outlet passage therefrom and a well connected between the chamber and the passage, and a plug mounted in the well and having a groove coacting with the wall of the well to define a capillary passage for maintaining a continuous flow of fuel to the burner and means for adjusting the plug axially of the well to bring portions of the groove into and out of the path of liquid flow through the well.

3. In a device controlling the flow of liquid fuel to a burner of the gravity feed type, a casing forming a fuel supply chamber with an outlet passage therefrom and a well connected between the chamber and the passage and by-passing a portion of the passage, a plug mounted in the well and having a helical groove coacting with the wall of the well to define a capillary passage for maintaining a continuous flow of fuel to the burner, and means for axially adjusting the position of the plug in the well to vary the length of the capillary passage in the path of liquid flow through the well.

4. In a device controlling the flow of liquid fuel to a burner of the gravity feed type, a casing defining a chamber and an outlet passage therefrom and a well connected with the chamber and the passage, a plug having a groove coacting with the wall of the well to define a capillary passage for maintaining a continuous flow therethrough of fuel from the chamber to the passage and to the burner, a spring biasing the plug into the well, and means for limiting the action of the spring and adjustable to vary the position of the plug in the well.

5. In a device controlling the flow of liquid fuel to a burner of a gravity feed type, a casing defining a chamber and an outlet passage therefrom and a well connected with the chamber and the passage, a plug having a groove coacting with the wall of the well to define a capillary passage for maintaining a continuous flow of fuel therethrough from the chamber to the passage and to the burner, the plug being movable axially within the well to vary the capillary effective length of the passage, means urging the plug into the well, and means limiting movement of the plug by the first said means.

6. In a device controlling the flow of liquid fuel to a burner of a gravity feed type, a casing defining a chamber and an outlet passage therefrom and a well connected with the chamber and the passage, a plug mounted within the well and having a helical groove extending from end to end of the plug and coacting with the wall of the well to define a capillary passage for maintaining a continuous flow of fuel therethrough from the chamber to the outlet passage and to the burner, a spring acting along the longitudinal axis of the plug and urging the plug into the well, and means limiting movement of the plug by the spring and adjustable to vary the length of the groove in the path of liquid flow through the well.

7. In a device controlling the flow of liquid fuel to a burner of the gravity feed type, a casing having a well between a supply chamber and an outlet passage, the wall defining the well having vertically spaced inlet and outlet apertures therein connecting the well with the chamber and the outlet passage respectively, a plug in the well for defining a capillary passage therewith between said inlet and outlet apertures to maintain a continuous flow of fuel to the burner, and means for axially adjusting the position of the plug in the well to bring an intermediate part of the passage defining a portion of the plug into alignment with a controlling one of said apertures to thereby vary the effective length of the capillary passage below said controlling well wall aperture and in the path of liquid flow through the well.

8. In a device controlling the flow of liquid fuel to a burner of the gravity feed type, a casing having a well between a supply chamber and an outlet passage, the well wall having vertically spaced inlet and outlet apertures therein connecting the well with the chamber and the outlet passage respectively, a plug having a groove coacting with a wall of the well for defining a capillary passage between said inlet and outlet apertures to maintain a continuous flow of fuel to the burner, and means for axially adjusting the position of the plug in the well to bring an intermediate part of the groove into alignment with a controlling one of said apertures to thereby vary the effective length of the capillary passage below said controlling well wall aperture and in the path of liquid flow through the well.

9. In a device controlling the flow of liquid fuel to a burner of the gravity feed type, a casing defining a chamber and an outlet passage therefrom and a well bypassing a portion of the outlet passage, the well wall having vertically spaced inlet and outlet apertures connecting the well with the chamber and the outlet passage respectively, a plug in the well and having a groove coacting with a wall of the well to define a capillary passage between said inlet and outlet apertures for maintaining a continuous flow of fuel to the burner, the plug being adjustable axially in the well to bring portions of the groove above a controlling one of said apertures in the well wall to thereby vary the effective length of said capillary passage between said inlet and outlet apertures, the plug having a passage vertically therethrough for venting gases from the liquid flowing through the well, a spring urging the plug toward the bottom of the well, and means limiting movement of the plug and adjustable to vary the plug position in the well.

ROY W. JOHNSON.

REFERENCES CITED

The following references are of record in the file of this patent:

UNITED STATES PATENTS

Number	Name	Date
1,858,557	Platt	May 17, 1932
2,012,004	Hall	Aug. 20, 1935
2,355,870	Johnson	Aug. 15, 1944