United States Patent [19]

Kruger

[11] **3,818,421**

[45] **June 18, 1974**

[54] **CONNECTION FOR RIGID COAXIAL TRANSMISSION LINE**

[76] Inventor: **Jack L. Kruger**, Goffstown, N.H.

[22] Filed: **Aug. 23, 1973**

[21] Appl. No.: **390,746**

Related U.S. Application Data

[63] Continuation of Ser. No. 242,543, April 10, 1972, abandoned.

[52] **U.S. Cl.** ..... **339/177 R,** 339/255 R
[51] **Int. Cl.** **H01r 13/16**
[58] **Field of Search** 339/177, 252, 253, 255; 333/97

[56] **References Cited**

UNITED STATES PATENTS

3,319,214	5/1967	Sewell	339/177 R
3,432,779	3/1969	Sewell	339/177 R

Primary Examiner—Joseph H. McGlynn
Attorney, Agent, or Firm—Goode & Chittick

[57] **ABSTRACT**

This disclosure relates to connectors used in joining rigid inner sections of high energy conducting coaxial transmission lines and distinguishes over the existing state of the art by providing a one contact surface joint which, while permitting the desired axial expansion and contraction movements inherent in those structures, avoids the well known problem of galling dust accumulations by including as an integral part of the connector, a receptacle for capturing this dust and associated particle matter.

7 Claims, 3 Drawing Figures

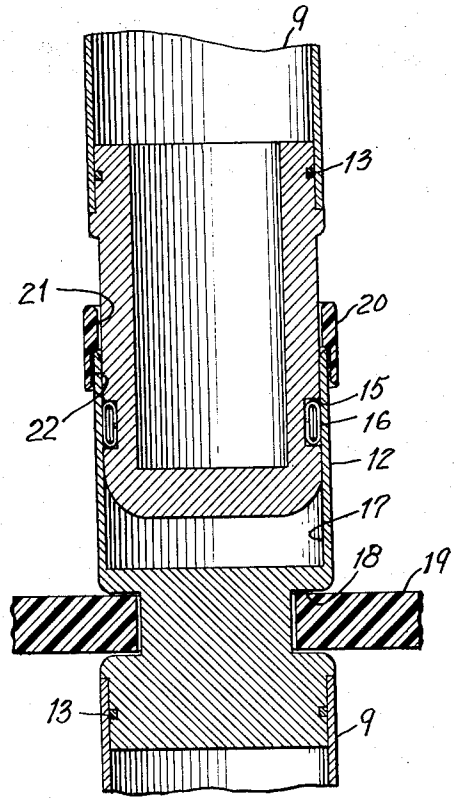

Fig. 1.

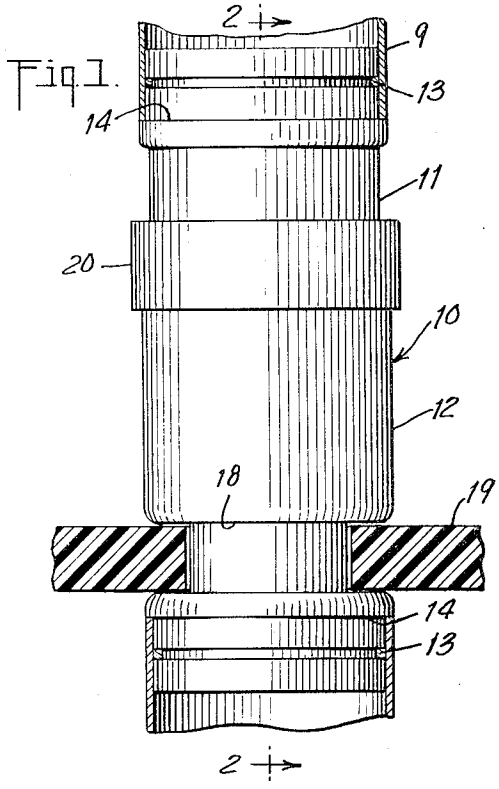

Fig. 2.

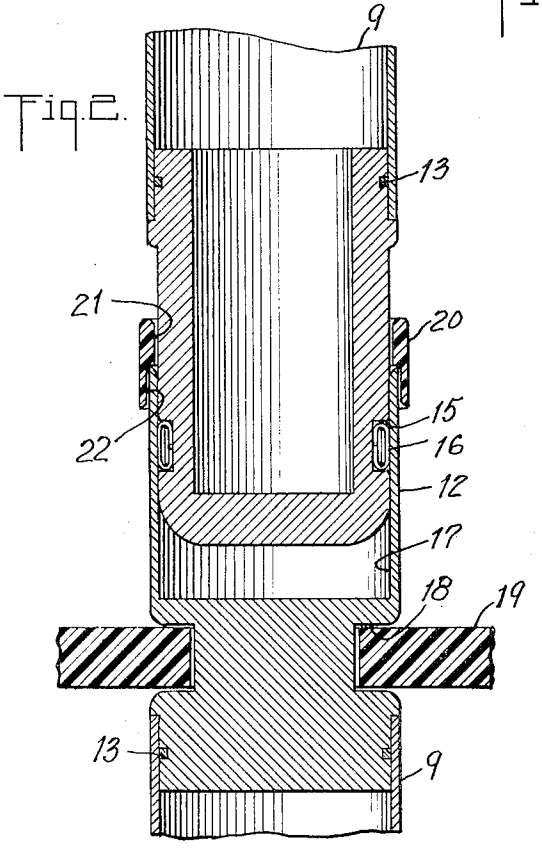

Fig. 3.

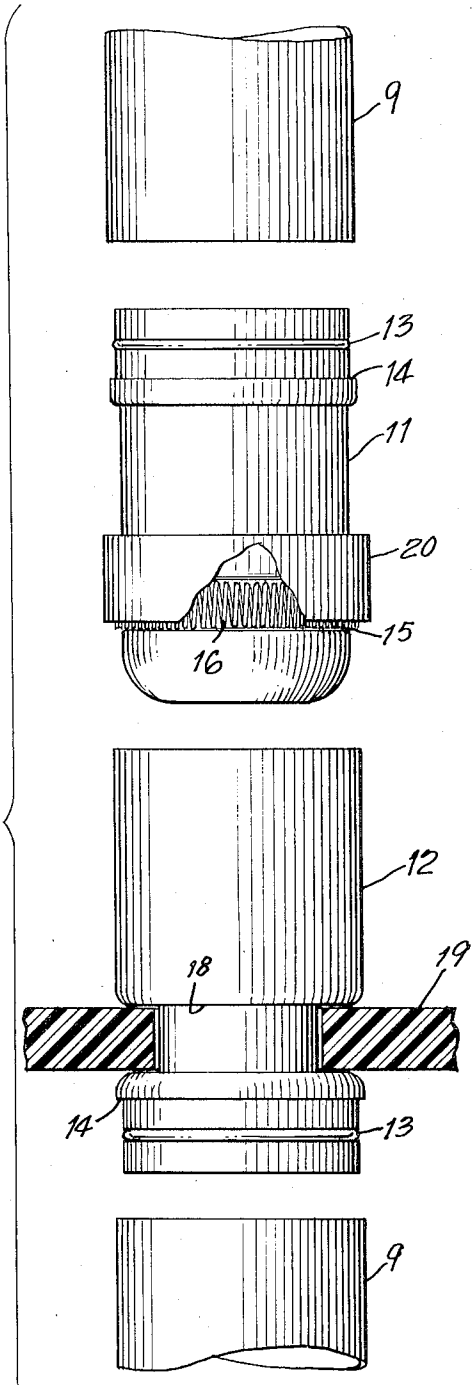

CONNECTION FOR RIGID COAXIAL TRANSMISSION LINE

CROSS REFERENCE TO RELATED APPLICATIONS

This application is a continuation of the application of Jack L. Kruger Ser. No. 242,543 filed Apr. 10, 1972, for Connector for Rigid Coaxial Transmission Line, and now abandoned.

BACKGROUND OF THE INVENTION

This invention relates generally to rigid, high-energy carrying co-axial transmission line equipment of the type employed in transmitting energy to a radio or television antenna. More particularly, this invention relates to a novel connector for joining linear sections of such inner conductor, these connectors sometimes being referred to as "bullets."

Antennas used in audio-visual broadcasting are generally mounted on top of high towers and may be spaced from a transmitter by as much as 300 to 2,000 feet. A coaxial transmission line connects the antenna and transmitter. Such coaxial transmission lines are generally comprised of assembled lengths of inner and outer tubular conductors held in spaced apart concentric relation from one another by a series of non-conductive cylindrical spacers positioned at regular intervals along the length of the inner transmission line at the connecting joints.

To date virtually all manufacturers of coaxial transmission lines have used the well known connector comprised of a tubular cylinder with longitudinal slots at one end to provide a series of flexible leafs or segments. These prior art connectors, usually of silver-plated brass, are typically used to join adjacent lengths of inner conductor in a coaxial transmission line. The problem incurred when using this type of connector is the wear that takes place between the connector and the tubular object it is mated to due to differential expansion between the outer conductor and inner conductor which is 0.2 inches of travel per 20 foot length. This wear is commonly referred to in the industry as "bullet galling." Manufacturers of coaxial transmission line have tried various methods to eliminate connector galling. The reason for concern over this problem is that as the connector wears (galls) in its day to day expansion cycle it produces metal filings which can fall and collect on the teflon insulator maintaining the connector's position and locking it into the transmission line. This occurrence over a period of time can create a path of metal dust to ground (from the inner conductor to the outer conductor) which greatly diminishes the voltage carrying capability of the transmission line. Depending on the power being applied to the transmission line the ultimate result of this condition is loss of signal or the eventual breakdown and burnout of the transmission line.

As stated previously the basic construction materials used by most manufacturers in the industry are silver plated brass or silver plated beryllium copper. Some manufacturers have even put on a baked-on carbon base material on the contacting finger surfaces of the connector to lubricate and minimize the galling effect. This coating does not enhance the electrical conductuity of the connector. When these coatings or platings wear off, as they eventually do, the contacting or conducting surface is then through brass or beryllium copper which has only 1/6 of the conducting power of copper. This condition in a high power transmission line generates heat due to the resistance of the contacting surface and can only aid the transmission line on its path to self-destruction.

Some of the problems related to the multi-fingered connector of the prior art are that during assembly and erection of the transmission line in the field, one or more of the connector fingers would be easily broken off or otherwise damaged. This, in turn, led the industry to develop so-called anti-split devices which, in effect, were self-aligning fixtures at the end of the connector. Another serious disadvantage of the multi-fingered connector is that even though it is machined and formed from a precision round piece of material, when the lengthwise fingers or slots are formed, and the material is stress relieved, it is no longer accurately round, thus, when inserted or connected to the corresponding round female counterpart, the electrical contact area around the periphery of the finger connector occurs only at intermittent high spots.

SUMMARY OF THE INVENTION

My invention overcomes these deficiencies by providing a novel expansion joint for use with the inner conductor of a coaxial transmission line in which one end of a conductor segment carries a rigid plug carrying a coiled spring adapted for insertion into a corresponding receptacle or cup member secured to the linearly adjacent end of another conductor segment. This cup member catches and retains therein any metallic particles or galling dust generated by the relative movement of adjacent conductor segments due to expansion and contraction motion. My invention further provides a novel retaining ring surrounding the coiled spring carried by the plug portion whereby to prevent its dislodgement from its annular seat on the plug.

It is, accordingly, among the various objects of this invention to provide a coaxial transmission line connector which has only one contacting surface between adjacent sections of conductor.

It is a further object of this invention to provide an expansion joint for a coaxial transmission line which seals each end of adjacent sections of conductor, thus, preventing dust or conductive chips from falling out of the inner conductor during its erection assembly.

A still further object of this invention is to provide a coaxial transmission line connector which eliminates the prior art form of fingers.

Another and further object of this invention is to provide a receptacle for capturing and retaining all particles and dust generated due to the expansion and contraction movements between joined conductor segments.

An important feature of this invention is that the novel design of the connector members permits semi-skilled workers to erect coaxial transmission line with a minimum of risk of damage thereto during erection.

Another feature of this invention is that the total conducting contact surface between connected portions of conductors is substantially greater than the contact available with the current state of the art multi-finger "bullet" or connector.

These and other objects and features will become more apparent from the following description when

taken in conjuction with the appended drawings in which:

FIG. 1 illustrates an elevation view of my connector in fully assembled condition;

FIG. 2 illustrates a vertical cross-sectional view of FIG. 1 taken on line 2—2 thereof; and

FIG. 3 illustrates an exploded view of the components illustrated in FIGS. 1 and 2.

DESCRIPTION OF A PREFERRED EMBODIMENT

Referring now with greater particularity to the drawings, there is shown in the drawings various views of my novel inner conductor connector 10 (i.e., bullet) comprised of a plug member 11 permanently connected into the bottom end of a conductor segment 9 and adapted for insertion and retention into a receptacle or cup member 12 which is permanently connected to the top end of the segment 9 therebelow. Both plug 11 and receptacle 12, fabricated of copper or other suitable conductive material, are securely attached into their respective adjoining ends of adjacent conductor segments 9, generally by means of silver soldering or brazing. For this purpose, there is provided on the upper end of the plug and the lower end of the receptacle an annular recess 13 around which is wrapped a length of sliver solder (not shown). Prior to assembly of the segments, these end portions with the silver solder thereabout are inserted into the ends of the respective conductor segments 9 until the lower end of the upper conductor abuts the corresponding annular shoulder 14 on the plug 11 and the upper end of the lower conductor abuts the corresponding annular shoulder 14 on the receptacle 12. The plug and receptacle are then subjected to the necessary heating to cause the solder to flow. It should be apparent that the inside diameter of each conductor segment 9 is sized to slidably fit over the end of plug 11 and receptacle 12.

The lower end of plug 11 is provided with an annular recess 15 to receive and accommodate a coiled spring 16. This is a spring characterized by two broad flat surfaces with rounded ends. The wire forming the spring is wound in a continuous form and generally silver plated for good electrical conductivity. The depth of recess 15 is so proportioned that when spring 16 is carried therein, the outside diameter of the spring is slightly larger than the inside diameter of recess 17 in receptacle 12. Thus, when plug 11 with spring 16 is inserted into recess 17, the spring will resiliently yield so as to permit its accommodation within the dimensional confines of recess 17, thus providing a firm contact against both the plug 11 and the receptacle 12 while at the same time conforming to any eccentricity or out-of-round condition of the recess 17.

There is also provided on receptacle member 12 an annular recess 18 for accommodating an electrically non-conducting plastic spacer 19, referred to hereinabove. In accord with conventional practice, the outer periphery of the spacer 19 is attached to the related outer tubular conductor. The spacer carries the weight of each segment 9.

Frequently, when adjoining segments of inner conductor 9 are being assembled in the field, since the outside diameter of the coiled spring 16 is larger than the inside diameter of recess 17, careless assembly procedures will often "pop" or push the spring out of its recess 15, and either severely deform or damage it, thus resulting in poor and incomplete electrical contact between the joined sections. In order to eliminate this possibility, I provide on plug 11 an electrically non-conductive retaining ring or slip ring 20 made of suitable plastic, for example, teflon. This ring 20, as seen in the cross-sectional view of FIG. 2, is annularly shaped with a uniform outside diameter. The internal configuration, however, is stepped, i.e., the surface 21 is dimensioned so as to be slidable over the surface of plug 11. See FIG. 3. Surface 22 is of slightly larger diameter so as to clear the outside diameter of spring 16 and be slidable thereover. A chamfered edge 23 is provided on the bottom of plug 11 to eliminate the upper edge portions of receptacle 12 from catching thereon during assembly. Thus, when plug 11 is inserted into recess 17 of receptacle 12, surface 22 of slip ring 20 initially surrounds spring 16 thereby preventing its dislodgement from its annular seat 15, as shown in the FIG. 3 view and compelling spring 16 to assume its correct position within recess 17. As the upper end of receptacle 12 passes over spring 16, the ring 20 is engaged and pushed upward along plug 11 to its final position shown in FIGS. 1 and 2. Alternatively, it may be desirable prior to assembly of this joint to lower the position of slip ring 20 from that shown in FIG. 3, so that its inner surface 21 actually covers spring 15 in compressive relation and with the skirt portion 22 extending below the bottom of the spring.

It should, accordingly, now be apparent in light of the foregoing disclosure that I have significantly improved on the prior art form of inner conductor connectors for coaxial transmission lines by providing only one electrically contacting surface between joined conductor segments using a coiled spring in a novel manner. This spring and its contacting receptacle surface are the only relatively moving portions generating dust or particulate matter, and this dust and matter are captivated below plug 11 in the recess of the receptacle 12 where it will have no deleterious effect on the performance of the conductor line.

Further, by using the plastic slip ring 20 over spring 16, it not only enables unskilled personnel to easily assemble a rigid conductor line in the field, but more importantly, the plastic insert itself cancels out the inductance presented by the dimensional change in size of the diameter of plug 11 from the diameter of the remaining transmission line 9; thus, by adding a plastic dielectric in this region of inductance on the plug, capacitance is effectively added, thus canceling out the electrical reflection caused by this condition.

A further feature which should now also be apparent is that because I use only one contacting surface between adjoining conductor segments, there is only one-half the junction resistance (i.e., insertion loss) and this, accordingly, permits better thermal conductivity. Because the line now only has one-half of the conventional connections, this results in the elimination of damaging hot-spots.

The connector design herein disclosed enables this device to be used with both thin wall (i.e., 0.025 inches wall thickness) or thick wall (i.e., 0.040 inches wall thickness) tubing. Conventionally available connectors should generally be used with either one or the other, but cannot be interchanged without the possibility of severely affecting the electrical performance of the line.

When in the claims, the terms "bottom end" and "top end" of the conductor segments are used, it will be appreciated that there will also be a generally horizontal portion of the transmission line running from the transmitter to the tower. Thus the "bottom end" of each segment is the end nearer the transmitter, whether the segment be in vertical or horizontal position.

It will be understood that various changes in the details, materials and arrangement of parts which have been herein illustrated in order to explain the nature of the invention may be made by those skilled in the art within the principle and scope of the appended claims.

I claim:

1. A connector for joining linear sections of inner conductor of a coaxial transmission line, comprising the combination of:

a. a plug means adapted to be secured into the bottom end of an inner conductor of a coaxial transmission line;

b. a receptacle closed at its bottom and adapted to be secured into the top end of an adjoining conductor section therebelow, for receiving said plug means;

c. an annular recess around the portion of said plug means which is insertable into said receptacle; and

d. resiliently yieldable electrically conductive means carried in said annular recess for making electrical contact between said plug and receptacle.

2. The combination set forth in claim **1** wherein said resiliently yieldable conductive means comprises a coiled spring.

3. The combination set forth in claim **2** further comprising a retaining ring slidably carried on said plug means to cover at least a portion of said coiled spring to retain it in position in said recess during insertion of the said plug and spring into said receptacle.

4. An inner conductor of a coaxial transmission line comprising the combination of:

a. a plurality of linearly joined conductor segments; wherein each joined conductor segment comprises:

b. an electrically conductive tube member;

c. a plug means secured into and closing the bottom end of said tube member

d. a receptacle means secured into and closing the top end of said tube member and adapted to receive the plug means of a linearly adjacent conductor segment thereabove, said receptacle closed at its bottom end; and

e. a resilient and conductive spring means carried on that portion of said plug means which is insertable into said receptacle for establishing and maintaining electrical conductivity through joined conductor segments.

5. The structure set forth in claim **4** wherein each said plug means slidably carries a retaining ring to retain said spring means in position during insertion into its receiving receptacle.

6. Means for electrically connecting in aligned relation adjacent ends of the inner conductors of a coaxial transmission line, said means comprising,

a plug permanently secured to the lower end of one segment of said conductors,

an upwardly facing receptacle closed at its bottom and having a lower body part permanently secured to the upper end of the next adjacent segment of said conductors, said receptacle shaped to receive therein said plug in close sliding engagement,

a first annular recess around the portion of said plug means which is insertable into said receptacle,

resiliently yieldable electrical conductive means carried in said first annular recess for making positive electrical contact between said plug and receptacle,

a second annular recess in said lower body part below the said bottom of said receptacle and above said upper end of the segment to which said body part is attached, a circular load carrying spacer mounted in and about said second annular recess for supporting the inner conductor depending therefrom,

whereby following assembly of said inner conductors between the transmitter and antenna, there will be only one non-permanent and slidable connection per segment of conductor and said non-permanent connection will be on the antenna side of said spacer.

7. The combination set forth in claim **6**, said resiliently yieldable electrically conductive means comprising a coiled spring and a retaining ring slidably carried on said plug to cover at least a portion of said coiled spring to retain it in position in said first recess during insertion of said plug and spring into said receptacle.

* * * * *