United States Patent

[11] **3,630,088**

[72] Inventors **Ronald Sawyer**
Littlehampton;
Peter Bernard Stockwell, Biggin Hill, near Westerham, both of England

[21] Appl. No. **13,969**
[22] Filed **Feb. 25, 1970**
[45] Patented **Dec. 28, 1971**

[73] Assignee **National Research Development Corporation**
London, England

[32] Priority **Feb. 27, 1969**
[33] **Great Britain**
[31] **10,550/69**

[54] **SAMPLE SUPPLY APPARATUS**
3 Claims, 6 Drawing Figs.

[52] **U.S. Cl.** ..... **73/423 R,** 73/422 GC
[51] **Int. Cl.** **G01n 1/14**
[50] **Field of Search** ..... 73/421 B, 422 GC, 423 A; 23/253, 259

[56] **References Cited**

UNITED STATES PATENTS

3,479,880	11/1969	Mutter et al.	73/423 A
2,995,037	8/1961	Parker et al.	73/421 B
2,895,055	7/1951	Crane et al.	23/253

Primary Examiner—S. Clement Swisher
Attorney—Cushman, Darby & Cushman

ABSTRACT: A feed system for use with analytical apparatus in which liquid samples are supplied sequentially from a magazine of samples to a sample reservoir and thence to an analytical apparatus, arrangements being made for flushing the sample reservoir prior to each sample being supplied to it. A gas chromatographic apparatus in association with the feed system.

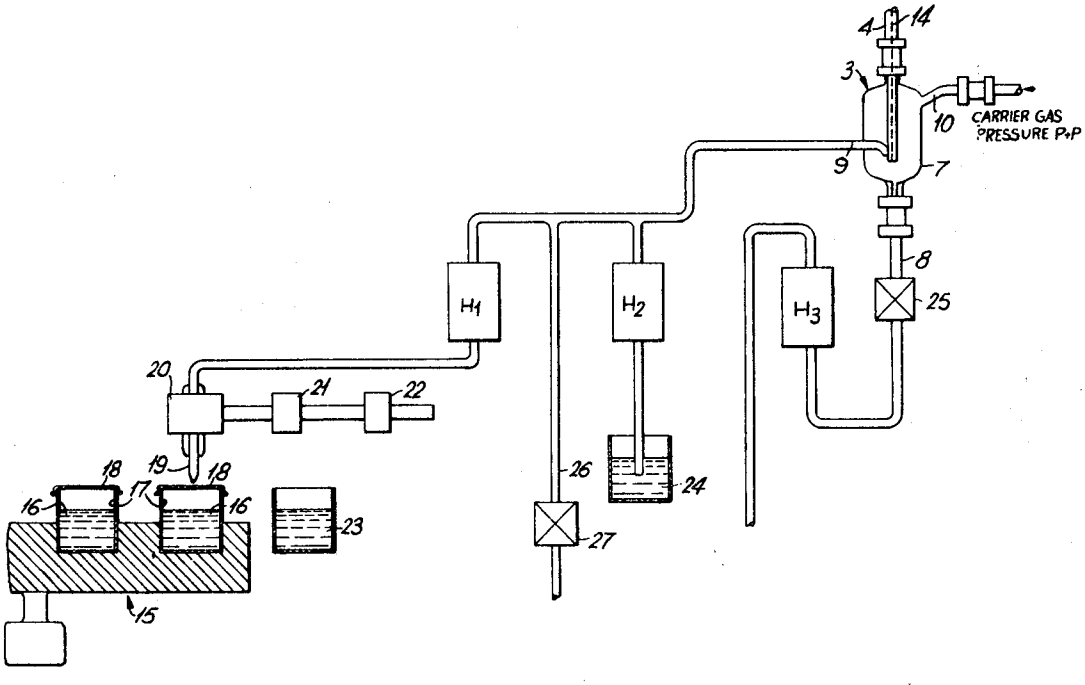

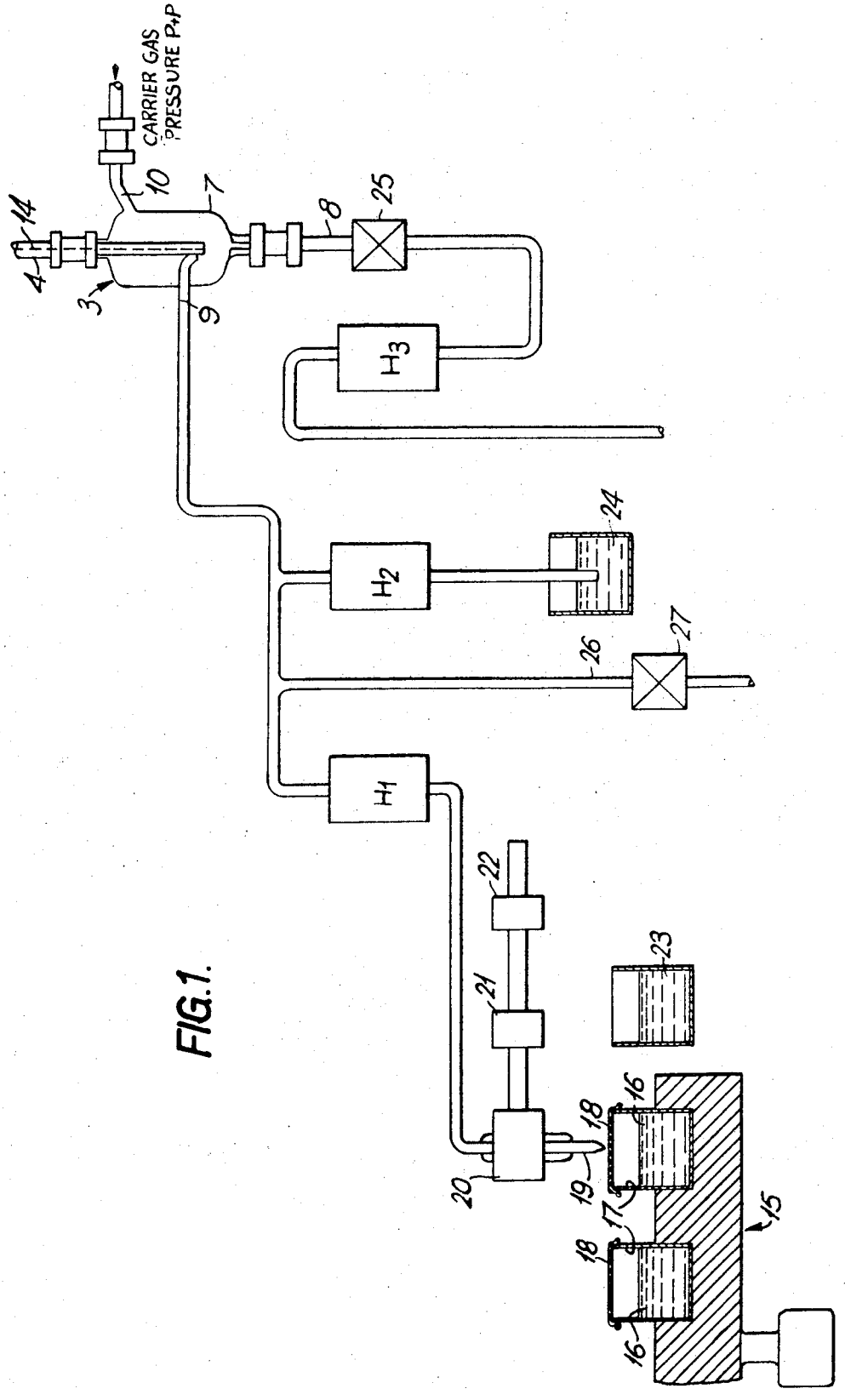
CARRIER GAS PRESSURE P+P
10
7
8
25
14
4
3
9
H3
H2
24
26
27
H1
22
21
23
20
19
18
16
17
15

FIG. 1.

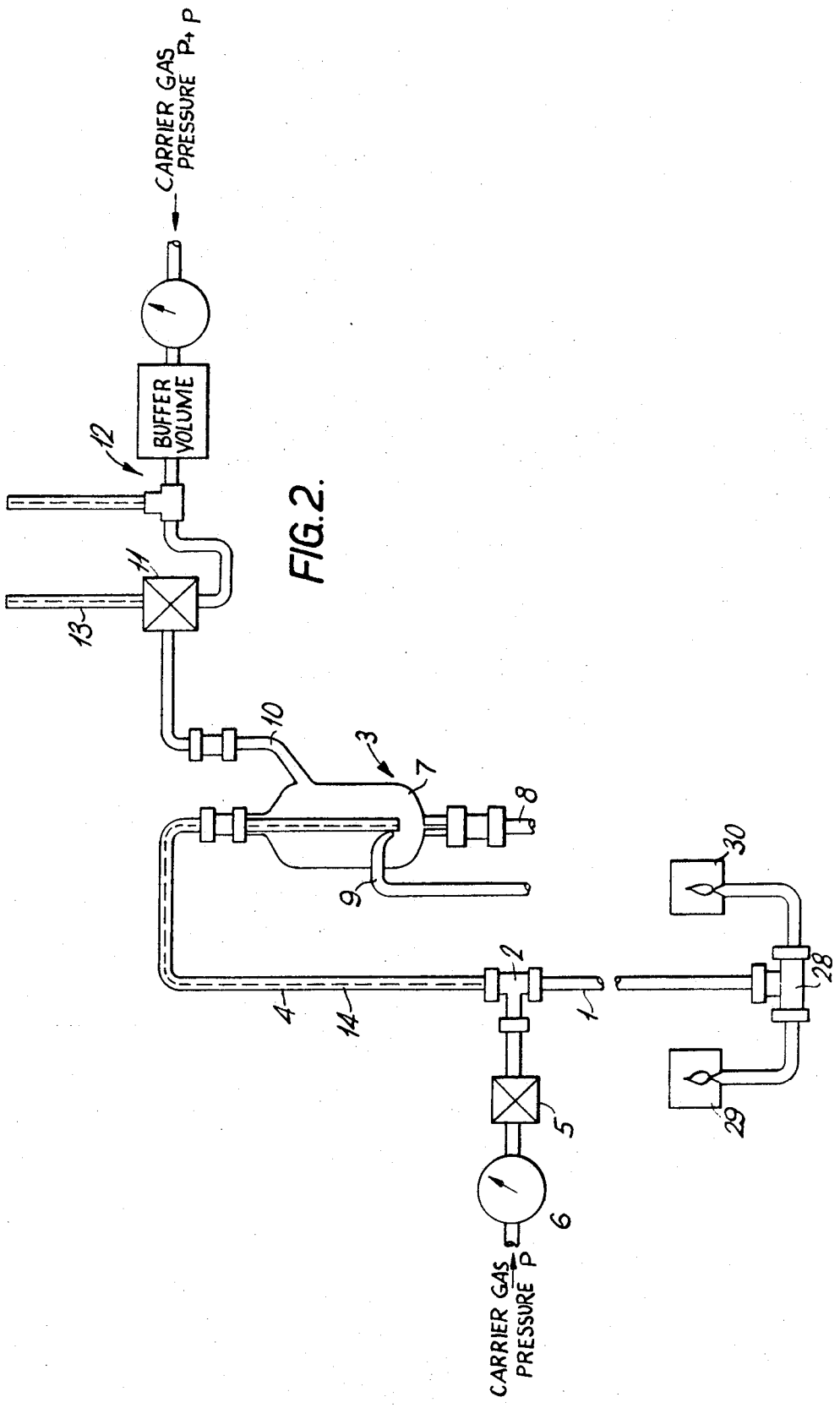
CARRIER GAS PRESSURE P+p
BUFFER VOLUME
12
11
13
10
3
7
8
9
2
4
14
1
30
28
29
5
6
CARRIER GAS PRESSURE P

FIG. 2.

FIG. 3.

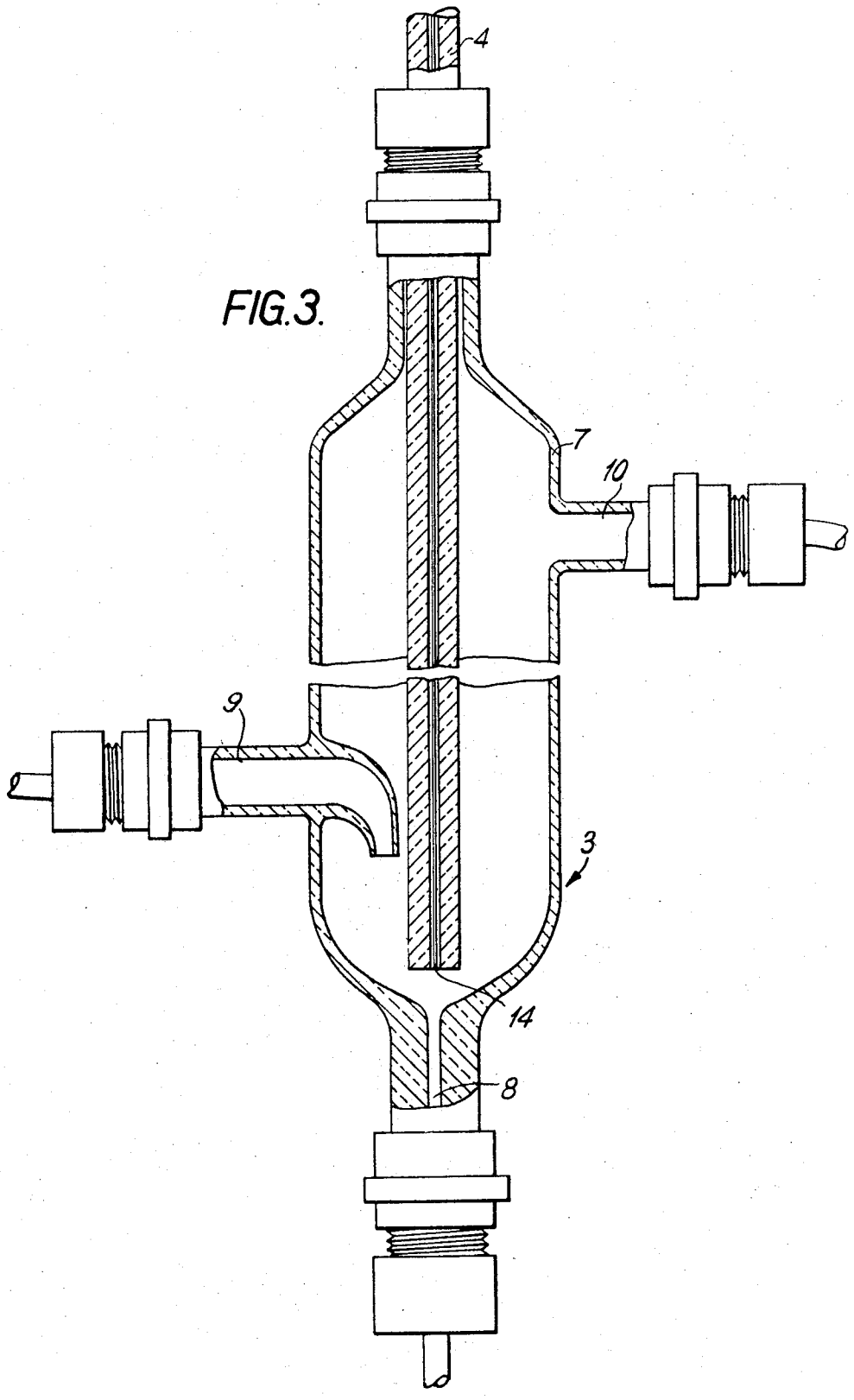

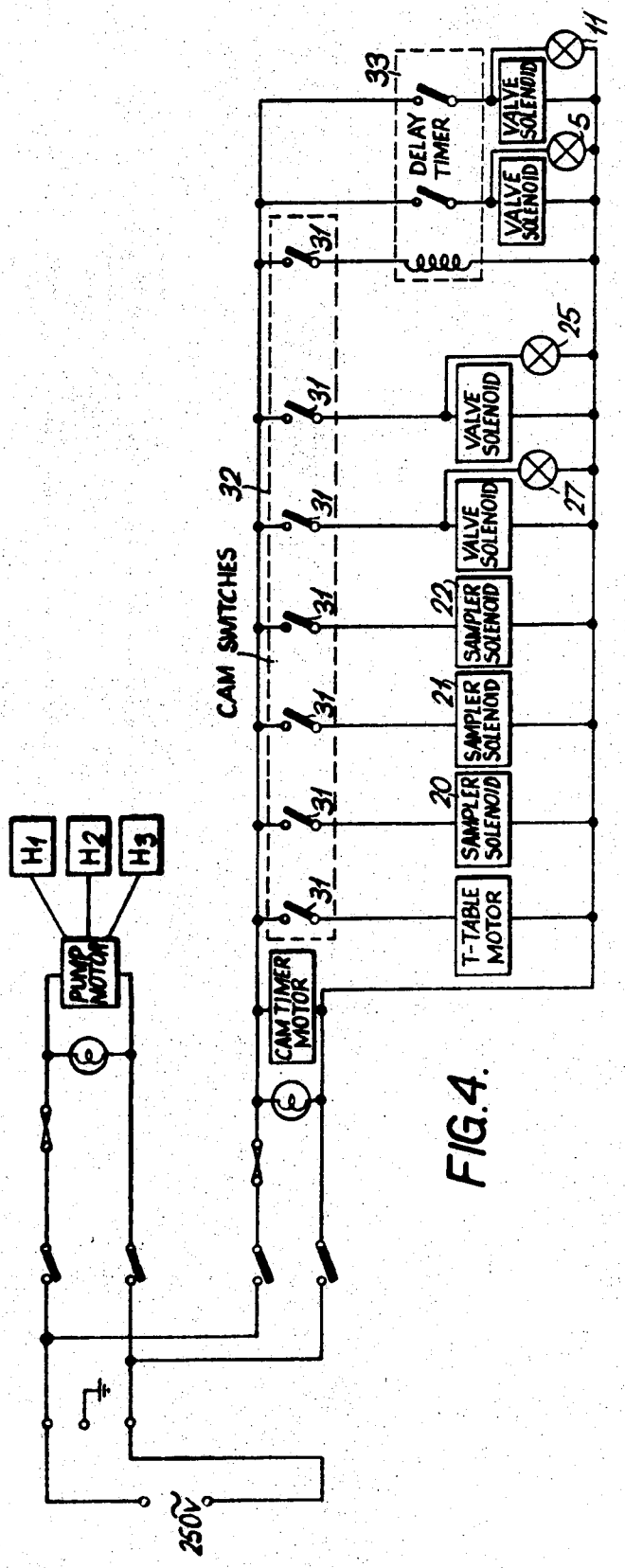
H1
H2
H3
PUMP MOTOR
CAM TIMER MOTOR
250V~
CAM SWITCHES
32
31
33
DELAY TIMER
11
5
25
27
22
21
20
T-TABLE MOTOR
SAMPLER SOLENOID
VALVE SOLENOID

FIG. 4.

FIG.5.

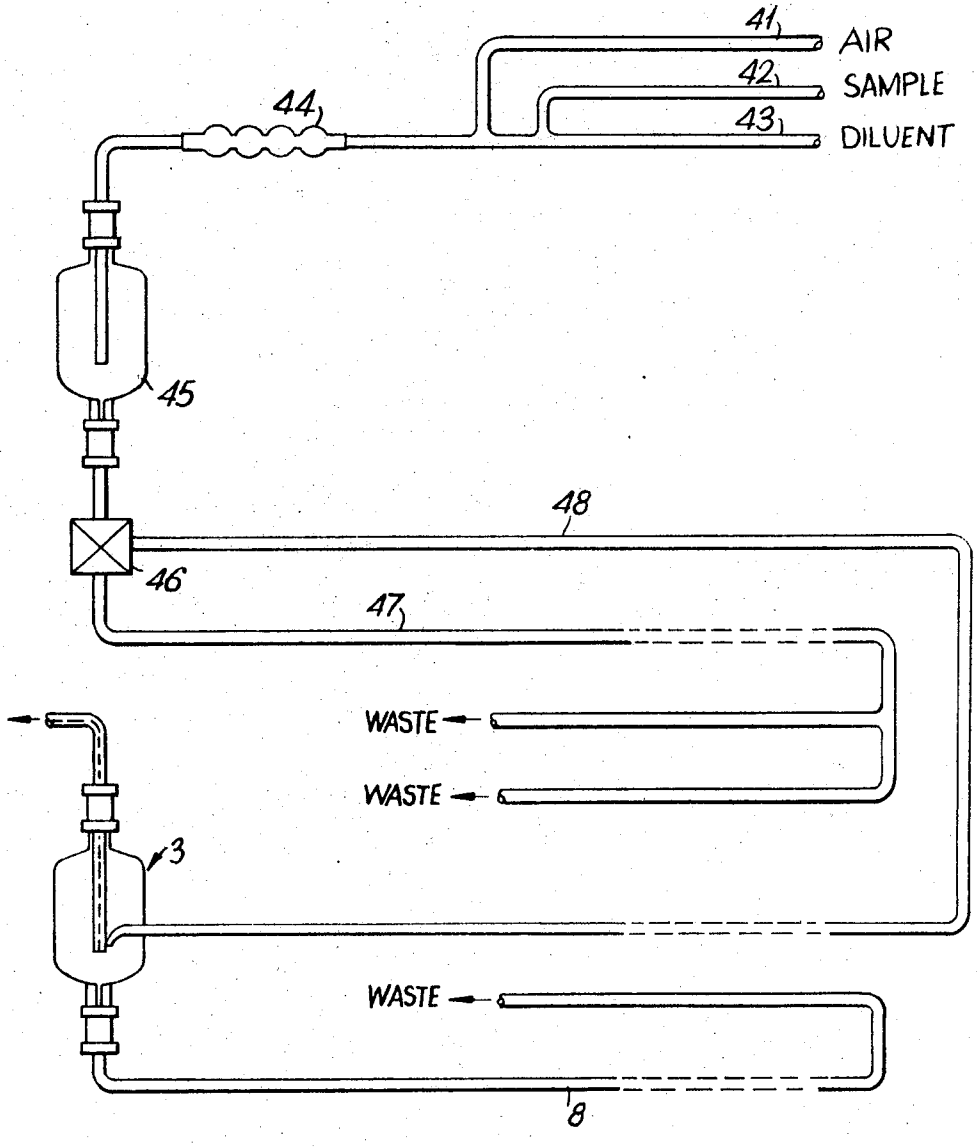

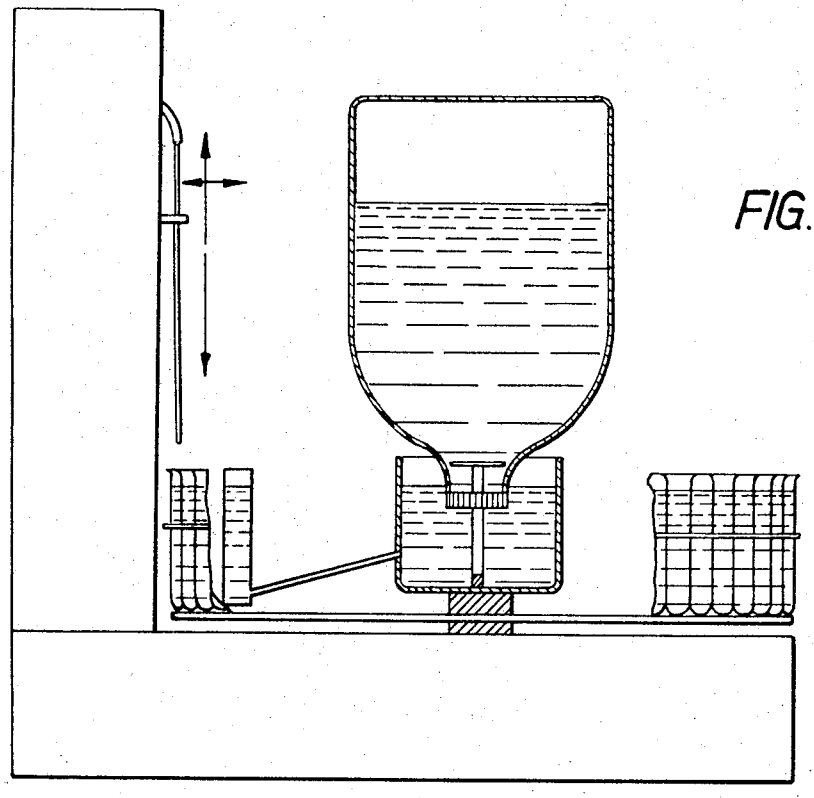

FIG.6.

SAMPLE SUPPLY APPARATUS

The invention relates to analytical apparatus and more particularly to apparatus for the analysis of liquid samples by the method of gas chromatography.

According to the present invention there is provided a feed system for an analytical apparatus comprising a magazine for holding a plurality of vessels containing liquid samples, a sample reservoir, means for sequentially supplying samples from said vessels to the sample reservoir, means for transferring a metered quantity of a sample from the said reservoir to the analytical apparatus, and means for flushing the reservoir after each sample has been transferred to said apparatus and before a further sample is supplied to the reservoir.

According to a preferred embodiment of the invention the analytical apparatus is a chromatographic column adapted for the analysis to be carried out by the method of gas chromatography and the said sample is arranged to be transferred from the reservoir to the column by the application to the reservoir of a gas pressure in excess of the pressure of the gas at the input of the column.

Embodiments of the invention will be described by way of example with reference to the accompanying drawings in which:

FIG. 1 shows a flow diagram of a liquid system utilized in an embodiment of the invention;

FIG. 2 shows a flow diagram of a gas injection system utilized in the embodiment of FIG. 1;

FIG. 3 shows a longitudinal section of a sample reservoir for use with an embodiment of the invention.

FIG. 4 illustrates a control circuit for use with the embodiment of FIG. 1;

FIG. 5 shows a flow diagram of a liquid system utilized in a second embodiment of the invention; and

FIG. 6 shows a generalized view of an apparatus embodying the invention.

Referring to FIGS. 1 and 2, a gas chromatograph column 1 has the conventional injection port at its upper end removed and replaced by a T-piece 2 that connects the column 1 to a sample reservoir 3 via a capillary tube 4, and to a source of carrier gas, which is not shown, via a valve 5 and a pressure gauge 6. The sample reservoir 3, which is shown more fully in FIG. 3, consists of a glass vessel 7 having a drain tube 8, a sample inlet tube 9 and a gas inlet tube 10. The gas inlet tube 10 includes a three-way valve 11 that connects the inlet tube 10 either to a buffer volume and bleed tube 12 and a source (not shown) of a carrier gas at a higher pressure than that applied to the column 1, or to the atmosphere via a second capillary tube 13. Thus carrier gas fed into the T-piece 2 can pass through the column 1 or vent to atmosphere via the capillary tube 4 joining the T-piece 2 to the reservoir 3, and the gas inlet tube 10 to the reservoir 3.

The capillary tube 4 which acts as a sample inlet from the reservoir 3 to the column 1, has a bore of some twenty-thousandths of an inch that is restricted by means of a stainless steel wire 14 inserted in it. By means of a range of wires of suitable diameters, the effective diameter of the capillary tube 4 can be varied, among other parameters to control the amount of sample injected into the column 1. A suitable diameter for the stainless steel wire is in the region of fifteen-thousandths of an inch. The capillary tube 4 is arranged to terminate somewhat lower down in the vessel 7 than does the sample inlet tube 9. The components of the injection system are placed as close to one another as is practicable so as to minimize the dead space in the injection system. A sample magazine in the form of a motor-driven turntable 15 contains a number of samples 16 each of which is contained in a glass vessel 17 that is closed by a rubber septum 18 in a conventional fashion. A pump fitted with multiple heads designated H_1, H_2 and H_3, as shown in FIG. 1, is so arranged that the head H_1 can be connected to any given sample 16 in the magazine 15 by means of a hollow needle 19, the position of which is controlled by solenoids 20, 21 and 22 which operate to cause the needle 19 to pierce a given septum 18 or to immerse the needle 19 in a vessel 23 containing pure solvent. A suitable needle is provided by means of a stainless steel tube having an outside diameter of about a sixteenth of an inch. Another head H_2 of the pump is arranged to pump an internal standard solution 24 simultaneously with a sample solution and to mix the standard solution 24 with the sample solution. The combined solutions are fed into the reservoir 3 and are pumped to waste by the head H_3 of the pump via another solenoid valve 25.

The relative pumping rates are so arranged that the combined sample and standard solutions are pumped at a rate greater than the drain rate from the reservoir 3, thus allowing the sample to build up in the reservoir 3 prior to injection in the column 1. At all other times the sample reservoir 3 effectively is empty, so that hot carrier gas can enter the capillary tube 4 so as to flush it and reduce the memory effect between one sample and another.

In order to prevent the buildup of a back pressure in the connection from the reservoir 3 to the needle 19, due to carrier gas bleeding back from the reservoir 3 and also to the continuous pumping of the standard solution by the head H_2 of the pump, a vent 26 to atmosphere is provided. A solenoid-operated valve 27 enables the vent 26 to be closed off when required.

In operation, a carrier gas is fed into the top of the column 1 via the solenoid operated valve 5 and the pressure gauge 6, and bleeds in a controlled manner through the capillary injection tube 4 and out of the three-way valve 11 which is normally open to atmosphere. At the same time the internal standard solution is pumped through the sample reservoir 3 and to waste via the valve 25.

When it is desired to inject a given sample solution into the column 1 for analysis, the solenoids 20, 21 and 22 are actuated and the needle 19 is caused to pierce the septum 18 of a given sample 16. The valve 27 is opened and the sample solution and the standard solution are pumped into the sample reservoir 3, the drain valve 25 is which is shut. After a delay sufficient for a predetermined volume of sample solution to accumulate in the reservoir 3 the valve 5 is shut and the valve 11 in the inlet tube 10 to the sample reservoir 3 is moved to its second position, thus enabling carrier gas from the source at a higher gas pressure to flow into the sample reservoir 3 and to force the sample solution into the column 1 via the capillary tube 4. After the predetermined quantity of the sample has been injected into the column 1 the valve 11 is returned to its first position and the valve 5 is opened. The injection needle 19 is raised from the given sample vessel 17 and is moved over the vessel 23 containing the pure solvent, and the system is flushed out at least three times by the pure solvent, using the same sequence of operations as used to inject a sample into the column 1. The cycle is completed by moving the magazine 15 on one position and moving the injection needle 19 back over the next sample vessel 17.

The effluent flowing from the lower end of the column 1 is divided by means of a T-piece 28 and is fed simultaneously to two flame ionization detectors 29 and 30, the output of which are fed to a dual electrometer and thence to a two-pen recorder, neither of which is shown in the drawings. By adjusting the attenuations of the flame ionization detectors 29 and 30, one can be made to give a signal which is used to determine quantitatively the constituents of the sample solution and the other can be used at a higher sensitivity to look for impurities. This arrangement is particularly useful when the analytical process to be carried out is an ethanol determination.

The cycle of operations is controlled by programmer, which is illustrated in FIG. 4. A series of switches 31 are operated in the desired sequence by means of a motor-driven camshaft, or cam timer, indicated generally by the enclosure 32, and energize respective solenoid-operated components of the apparatus which are identified by the numerals utilized in FIGS. 1 and 2. Alternatively an electronic timer may be used. The solenoids that actuate the valves 5 and 11, however, are controlled by a separate delay timer 33 that is operated by one of the cam switches 31.

The sequence of operations of the cam switches 31 is such as to give rise to the cycle given in table I.

TABLE I

1. Energize solenoid 20 to raise needle 19.
2. Energize solenoids 21 and 22 to position needle 19 over a sample 16.
3. Lower needle 19 to make contact with sample.
4. Open valve 27.
5. Close valves 25 and 5.
6. After delay open valve 11 to inject sample.
7. After suitable delay open valve 25, close valve 11 and open valve 5.
8. Repeat 1.
9. Energize solenoids 21 and 22 to position needle 19 over pure solvent 23.
10. Lower needle in solvent.
11. Repeat step 4, close valve 25, after delay open valve 25. Repeat three times to flush apparatus close valve 27.
12. Energize 20 to raise needle 19.
13. Energize 21 and 22 to position needle 19 over turntable and move turntable one step.
14. Repeat cycle from step 3.

Referring to FIG. 5, which shows a flow diagram of an alternative pumping and mixing unit utilized in a second embodiment of the invention, instead of an electrochemical pump having multiple heads H1, H2 and H3, a multichannel peristaltic pump which is not illustrated, is used. In this embodiment of the invention, when the ample probe 19 is immersed in a sample, sample solution, air and internal standard solution are pumped via respective inlet pipes 41, 42 and 43 and a mixing coil 44 to an intermediate reservoir 45. A solenoid-operated three-way valve 46 enables liquid to be pumped from the intermediate reservoir 45 either to waste via an outlet 47 or to the sample reservoir 3 via a connection 48. In the initial setting of the valve 46 the intermediate reservoir 5 is drained via the outlet 47 which is connected to two tubes of the peristaltic pump in parallel. In the second position of the valve 40 the intermediate reservoir 45 is connected to the sample reservoir 3 via a single tube of the peristaltic pump. The solenoid-operated valve 15 shown in FIG. 1 is omitted and the sample reservoir 3 is continuously pumped to waste. However, the rate at which liquid is pumped from the intermediate reservoir 45 to the sample reservoir 3 is arranged to be greater than that at which liquid is pumped from the sample reservoir 3 to waste. Thus, when the valve 46 is operated to connect the intermediate reservoir 45 to the sample reservoir 3, liquid builds up in the sample reservoir 3. At all other times the sample reservoir 3 effectively is empty, so that hot carrier gas can enter the capillary tube 4 so as to flush it and reduce the memory effect between one sample and another. The cam timer 32 is so arranged that a period of time elapses sufficient for a predetermined volume of liquid to accumulate in the sample reservoir 3. The cam timer 32 then operates the valve 46 to shut off the intermediate reservoir 45 from the sample 3 (and to connect the intermediate reservoir to the outlet 47 so that it can be drained), and the sample reservoir 3 is drained of remaining sample. This cycle is then repeated to build up a representative sample in the ample reservoir 3 for injection in to the column 1. When this has been done the cam timer 32 is arranged to connect the high-pressure carrier gas source to the sample reservoir 3 for a predetermined period of time so as to cause a standardized amount of sample to be injected into the column 1. The flow rates into and out of the sample reservoir 3 and the injection period are so arranged that during the injection period the level of liquid in the sample reservoir 3 does not fall below the end of the inlet capillary tubing 4. After an injection period has ended the probe 19 is removed from the particular sample vessel 17 and immersed in the standard solution. A washing cycle similar to that used to inject the sample into the column 1 is carried out. The magazine 15 is then moved on one position, as before.

The sequence of operations is shown in table II and the cam timer 32 is modified to provide this sequence.

TABLE II

1. Energize solenoid 20 to raise needle 19.
2. Energize solenoids 21 and 22 to position needle 19 over a sample 16.
3. Lower needle 19 to make contact with sample.
4. After suitable delay, operate valve 46 to close drain 47.
5. Allow level to build up in sample reservoir for predetermined period.
6. Operate valve 46 to clear sample reservoir 6.
7. Repeat 4 and 5.
8. Close valve 5 and open valve 11 for a predetermined period to inject a sample into the column 1.
9. Open valve 46.
10. Energize solenoid 20 to raise needle 19.
11. Energize solenoids 21 and 22 to position needle 19 over vessel 23.
12. Lower needle 19 into internal standard solution.
13. Repeat operations 4, 5, and 6, three times.
14. Open valve 46.
15. Energize solenoid 20 to raise the needle 19.
16. Energize solenoids 21 and 22 to position needle 19 over turntable 15.
17. Move turntable one step and repeat cycle from step 3.

As in the first embodiment, the cam timer 32 can be replaced by an electronic timer arranged to perform the same sequence of operations.

Referring to FIG. 6, in which components similar to those previously referred to in connection with FIGS. 1 and 2 bear the same reference numerals, the solenoids 20, 21 and 22 are enclosed in a housing 51 and operate to move the needle 19 in the directions indicated and by the arrows in FIG. 6. The sample vessels 17 are held in detachable quadrant racks each holding 12 vessels and together form a turntable 52 having the sample vessels 17 positioned in a ring about its periphery.

The movement of the turntable 52 is controlled by a star wheel mechanism, which is not shown, in association with a light source and a photosensitive diode switch, which also are not shown. When a sample vessel 17 is advanced past the position of the diode switch the sample vessel 7 operates the star wheel and the light source is shut off from the diode by a point of the star wheel, thus causing the turntable motor to stop. The motor is not activated again until the full injection and washing cycle has been carried out. Positions on the turntable 52 which do not contain a sample vessel 17 are ignored since the internal standard solution is positioned inside the ring of sample vessels 17, and is separate from the turntable 52 so that it does not rotate with the turntable 52. The level of solution in the vessel 23 is maintained at a suitable level by means of a constant head device 53. The cam timer 32, or electronic timer, and the motor for rotating the turntable 52, are housed in the base of the apparatus.

We claim:

1. A feed system for an analytical apparatus comprising a magazine for holding a plurality of vessels containing liquid samples; a sample reservoir; means for sequentially supplying samples from said vessels to the sample reservoir; means for continuously draining the sample reservoir; means for pumping to the reservoir for a predetermined period of time sample liquid from one of said vessels at a greater rate than that at which sample liquid is drained from the reservoir, whereby a predetermined quantity of sample liquid is accumulated in the sample reservoir to provide a metered sample; means for transferring the metered sample from the sample reservoir to the analytical apparatus; and means for flushing the sample reservoir after each sample has been transferred to said analytical apparatus and before a further sample is supplied to the sample reservoir.

2. An analytical system comprising:

a chromatographic column for conducting gas chromatographic analysis; and

a magazine for holding a plurality of vessels containing liquid samples; a sample reservoir; means for sequentially supplying samples from said vessels to the sample reser-

voir; means for continuously draining the sample reservoir; means for pumping to the reservoir for a predetermined period of time sample liquid from one of said vessels at a greater rate than that at which sample liquid is drained from the reservoir, whereby a predetermined quantity of sample liquid is accumulated in the sample reservoir to provide a metered sample; means for transferring the metered sample from the sample reservoir to the chromatographic column; and means for flushing the sample reservoir after each sample has been transferred to said chromatographic column and before a further sample is supplied to the sample reservoir.

3. An analytical system according to claim 2 wherein the means for transferring said sample from said reservoir to said column comprise means for applying to the reservoir a gas pressure in excess of the pressure of the carrier gas at the input of the chromatographic column.

* * * * *