Feb. 15, 1944. P. F. HELMICK 2,341,549

HEATER

Filed Feb. 19, 1942

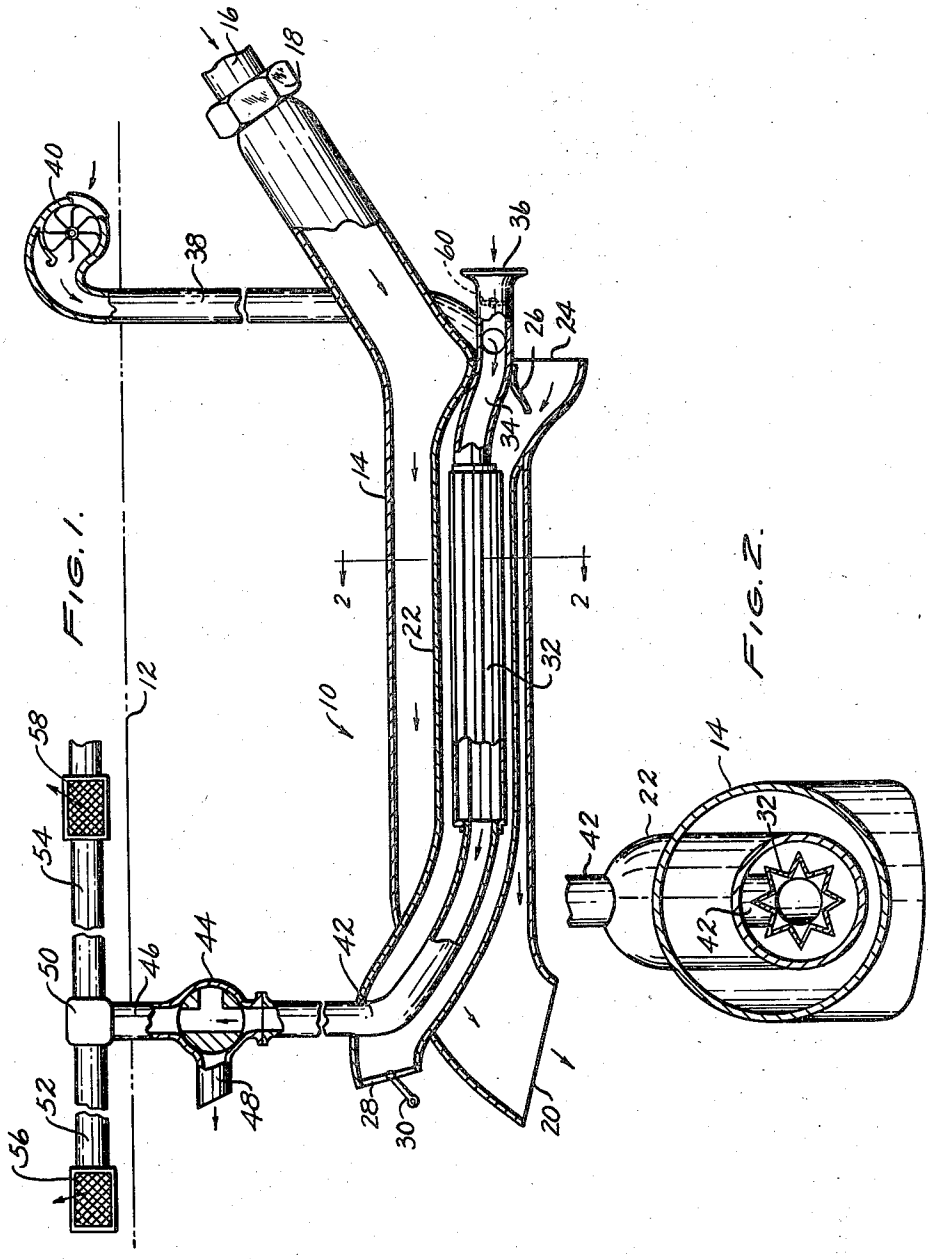

INVENTOR
PAUL F. HELMICK
BY Edgar H. Snodgrass
Chade Koontz and
ATTORNEYS

Patented Feb. 15, 1944 2,341,549

UNITED STATES PATENT OFFICE

2,341,549

HEATER

Paul F. Helmick, United States Army,
Osborn, Ohio

Application February 19, 1942, Serial No. 431,539

1 Claim. (Cl. 237—12.3)

(Granted under the act of March 3, 1883, as amended April 30, 1928; 370 O. G. 757)

The invention described herein may be manufactured and used by or for Government for governmental purposes, without the payment to me of any royalty thereon.

This invention relates to a heater and more particularly to a heater of the type which utilizes the heat of the exhaust gases of an internal combustion engine for heating the air contained within the body or cabin of an automotive vehicle.

A heater of one type or another for heating the air contained within the passenger compartment of a vehicle is essential for those vehicles which are intended to operate in cold weather or at extremely high altitudes, and such a heater generally employs water or steam as a heat-transfer medium for conveying the heat from the internal combustion engine to the vehicle space to be heated. These water and steam-heating systems suffer from the disadvantage that the water contained therein will freeze when the vehicle is standing idle unless precautionary measures are taken to prevent it. These systems also suffer from the disadvantage of their considerable weight which is very undesirable in an aircraft installation.

Heating systems which utilize the heat of the exhaust gases directly for heating the air within the cabin or body of the vehicle have many advantages over the vapor and water heating systems but these advantages are negatived by the fact that carbon monoxide from the exhaust gases is likely to escape into the vehicle inclosure and thereby gravely endanger the lives of the occupants. Such hot-air heating systems, though formerly employed in large numbers in the automobile field, have practically disappeared in recent years due to the ever present danger of carbon monoxide poisoning, and this has come about in spite of their inherent advantage of simplicity of construction and reliability in operation.

The present invention is concerned with an improvement which will render safe even the very simplest type of exhaust manifold heater, namely one in which the air within the vehicle space to be heated is circulated through a jacket circumjacent to the exhaust manifold of an internal combustion engine. According to my invention provision is made for positively preventing any of the exhaust gases from finding their way into the interior of the cabin or body as the result of a leak occurring in the jacket or in the exhaust manifold. This is accomplished by providing an intermediate jacket lying between the exhaust manifold and the conduit through which the air to be heated is conveyed, the space within this intermediate jacket being filled with a heat-transfer medium whose pressure is maintained at all times in excess of that obtaining in the exhaust manifold adjacent to the heater. Thus, should any leak occur in the jacket or in the exhaust manifold, as the case may be, the heat-transfer medium will flow into the manifold and prevent any reverse flow of the exhaust gases. Thus it will be impossible for any of the noxious gases present in the exhaust manifold to find their way into the air flowing through the hot-air conduit.

Accordingly, one of the objects of my invention is to provide an exhaust-manifold type of heater in which the escape of the exhaust gases into the air stream passing through the heater is positively prevented.

Another object of my invention is the provision of a heater of the exhaust-manifold type in which a heat-transfer medium contained in an intermediate jacket of the heater is maintained at a pressure exceeding that of the gases contained within the manifold adjacent to the heater.

A further object of my invention is the provision of a heater of the exhaust-manifold type in which the heat-transfer medium may be circulated through the intermediate jacket when the heater is not in use. In this way, the unused heat of the exhaust gases is dissipated and the overheating of the heater walls is prevented.

A preferred embodiment of the present invention will be hereinafter described with reference to the accompanying drawing, given merely by way of example, in which:

Figure 1 is a diagrammatic view illustrating a heater constructed in accordance with my invention as it appears when installed on an aircraft or other vehicle. The heater is shown in cross section so as to clearly illustrate the internal construction of same.

Figure 2 is a cross-sectional view of the heater taken on the line 2—2 of Figure 1.

In Figure 1, my improved form of heater is designated generally at 10 while the location of one of the walls of the vehicle inclosure is indicated at 12. The heater proper is comprised of an outer casing 14 which is connected to the exhaust pipe 16 of an internal combustion engine by means of a suitable gland nut 18. The left-hand end of the casing is curved downwardly and is open to the atmosphere as at 20. Thus the exhaust gases from the engine may pass out to the atmosphere by way of the exhaust pipe 16 and the casing 14. Situated within the casing 14 is an intermediate tube or jacket 22 which is enlarged at its right-hand end 24 so as to form an air scoop situated in the air stream flowing past the vehicle. The left-hand end of the jacket 22 is curved upwardly so as to pass through the wall of the casing 14, and is provided at its extremity with a butterfly valve 28 which may be manipulated by means of the lever 30 so as to tightly close this end of the jacket. A constriction 26 provided near the mouth of the jacket 22 aids in

building up an air pressure within the jacket 22. Within the jacket is located a piece of fluted tubing 32 which serves as a heating chamber for the air which is passed through the heater. To the right-hand end of tube 32 is attached a short tube 34 which is provided at its outer end with a bell-shaped mouth 36 serving as an air scoop to force air through the tube 32. Communicatively connected with the tube 34 is an air inlet tube 38 which, at its other end is connected to the outlet side of a positive pressure blower 40 located within the vehicle space to be heated. The left-hand end of the fluted tube 32 is connected to a tube 42 which passes upwardly through the wall of the jacket 22. At its upper end, the tube 42 is connected to one of the ports of a three-way plug valve 44, a second port of which is connected by means of a short tube 46 to a header 50 located within the cabin or body of the aircraft. From this header extend the tubes 52 and 54 which convey the hot air to registers 56 and 58 which then distribute the air to the interior of the vehicle body or cabin. A third port of the three-way valve 44 has attached thereto a short tube 48 which communicates at its outer end with the atmosphere. A butterfly valve 60 is provided in the vicinity of the mouth 36 of the tube 34 for the purpose of regulating the amount of fresh air which may be admitted into the heating chamber 32.

The operation of my device is as follows:

The blower 40 draws air out of the vehicle space to be heated and forces this air through the tubes 38 and 34 to the heating chamber 32 where the air is heated. The air then proceeds through the tube 42 and the valve 44 to the header 50 after which it passes out through the registers 56 and 58 located within the space to be heated. If it is desired that a certain amount of fresh air be added to that withdrawn from the cabin the butterfly valve 60 is opened so as to permit the air picked up by the air scoop 36 to be forced into the heating chamber 32 along with that delivered by the blower 40. If it is desired that only fresh air be supplied in a heated condition to the interior of the cabin, the blower 40 may be turned off and the butterfly valve 60 opened whereby the air entering the scoop 36 may pass through the heating chamber 32 and into the cabin through the registers 56 and 58.

In case it is desired to discontinue the use of the heater entirely the valve 44 may be manipulated to close off the upper end of the tube 42 so as to stop the flow of air through the heater. At the same time the butterfly valve 28 may be opened so as to permit a flow of air through the jacket 22. This circulation of cool air through the jacket serves to carry off the heat from the exhaust gases and so keep the walls of the jacket cool and prevent their burning out while the heater is not in use.

An alternative means for preventing the overheating of the walls when the heater is not needed for heating the air in the cabin is provided by the port 48 of the three-way valve 44. By opening the butterfly valve 60 and turning the plug of the valve 44 through 90 degrees in a clockwise direction from the position shown in Figure 1, a supply of cool air from the outside atmosphere will be caused to flow through the heating chamber 32 and back out to the atmosphere through the tube 48. Thus, the heater will continue to function in its customary manner but the heated air will be diverted back to the atmosphere instead of being led into the vehicle space to be heated.

It will be seen that by maintaining a pressure within the jacket 22 by means of the scoop 24 and the constriction 26, which pressure is greater than that of the exhaust gases passing through the casing 14, any possibility of the noxious gases from the exhaust leaking into the heated air is effectively prevented. In case a leak should occur in the jacket 22 at the same time that a leak exists in the fluted tube 32, the air contained under pressure within the jacket 22 will force its way through the leak in the wall of 22 and thus prevent any of the exhaust gases from entering the jacket.

It will be observed that the air contained within the jacket 22 serves as a medium for transferring the heat from the exhaust gases to the walls of the fluted tube 32. By maintaining this air under pressure its heat conducting properties are enhanced and an effective transfer of heat is made possible.

It will be seen from the above that I have devised an improved exhaust-manifold heater in which the danger of injury to the occupants of the cabin or body of the vehicle from carbon monoxide poisoning is entirely eliminated. Due to its simplicity and light weight my improved form of heater is ideally suited for use on aircraft where these features are of paramount importance.

The specific form of heater which I have shown in the drawing and described above is merely illustrative of one possible form which my invention might take and it is not to be construed as the only possible manner of constructing the same. It is obvious that various changes may be made therein without departing from the spirit of the invention as defined in the appended claim.

I claim:

A hot air heater of the type utilizing the exhaust gases passing through the exhaust manifold of an internal combustion engine as a source of heat, said heater comprising three tubes of different diameters arranged one within the other so as to form an intermediate chamber and two adjoining chambers, means for passing the exhaust gases through one of said adjoining chambers, means for passing the air to be heated through the other of said adjoining chambers, means located at one end of said intermediate chamber for supplying air thereto at a pressure exceeding that of the exhaust gases contained inside said one adjoining chamber, and means located at the other end of said intermediate chamber for enabling this end of the chamber to be selectively opened or closed to the outside atmosphere, said other end being opened to the atmosphere when the heater is not in use so as to enable a continuous stream of air to pass therethrough, and being closed to the atmosphere when said heater is in use so as to cause the air to remain in a substantially static condition within said chamber and thus serve as an effective heat-transfer medium between the hot exhaust gases and the air to be heated.

PAUL F. HELMICK.