May 24, 1932. E. S. PURINGTON 1,859,465

SYSTEM OF BROADCASTING

Filed Oct. 22, 1928

Fig. 1

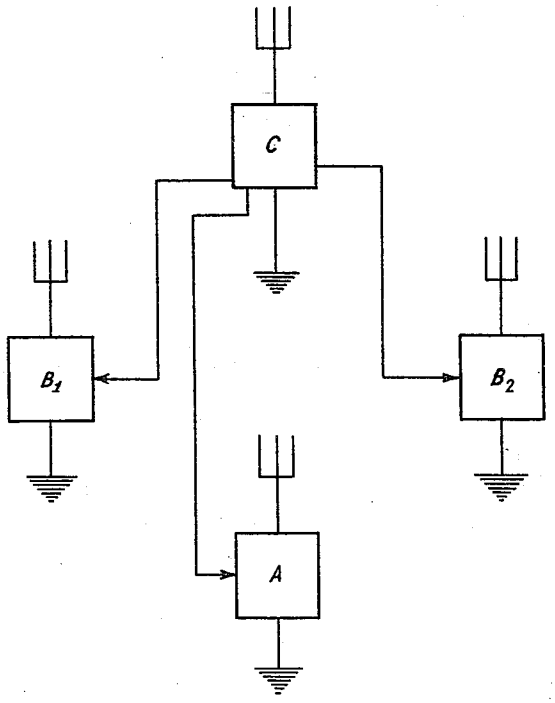

Fig. 2

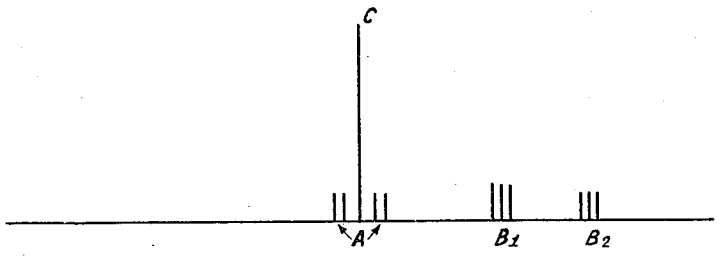

INVENTOR
ELLISON S. PURINGTON
BY Ira Williams
ATTORNEY

Patented May 24, 1932 1,859,465

UNITED STATES PATENT OFFICE

ELLISON S. PURINGTON, OF GLOUCESTER, MASSACHUSETTS, ASSIGNOR TO JOHN HAYS HAMMOND, JR.

SYSTEM OF BROADCASTING

Application filed October 22, 1928. Serial No. 314,047.

This invention relates to the transmission of intelligence by radiant energy and to systems of broadcasting information, music, etc. and more particularly to a system for permitting the broadcasting of a plurality of such programs without undue interference.

One object of this invention is to provide a system of broadcasting in which the interference between a number of broadcasting stations operating at or near the same frequency may be prevented.

Another object of my invention is to economize in the amount of power necessary to broadcast a given number of radio programs by a plurality of radio broadcasting stations.

A further object of my invention is to accomplish with ease and accuracy the control of the carrier frequency being transmitted by a plurality of radio broadcasting stations. Further objects of my invention will appear from the following description taken in connection with the accompanying drawings.

In multiplexing of radio telephone or radio broadcast signals, the number of programs which can be handled within certain wave band limits are necessarily limited, and the accuracy of the frequencies used by each of the various transmitters is of extreme importance. It is an object of this invention to secure a big advantage in the transmission of a plurality of radio broadcast stations by increasing the number of communication channels possible, first by the accurate allocation of the signals and secondly by cutting down the amount of energy in the ether emanating from each of the radio transmitting stations.

As has previously been described and disclosed in connection with inventions of John Hays Hammond, Jr. and others, a single frequency may be used by broadcasting stations for the transmission of several independent messages by the use of double modulation. A difficulty, however, which arises in multiplexing of a plurality of radio broadcast programs over the same radio transmitter even though using the double modulation system is the interaction because of the loadings of one of the circuits with the other circuits.

Thus, a single antenna equipment of which the power tubes are capable of producing 500 watts of well modulated signal with a single channel, if multiplexed for five channels might not be able to produce more than the equivalent of five separate well modulated 50 watt transmitters without objectionable cross signalling.

To overcome this difficulty, the present invention provides a central carrier wave common to a group of broadcast stations. There would be say one carrier frequency for every five radio broadcast signals, and the amount of interference produced by the beating of the carrier waves "of separate groups of transmitters" is correspondingly substantially reduced. A plurality of sub-stations, are provided one for each broadcast message that is to be transmitted, and equipped with suitable antennæ. Suitable means are provided for supplying each of the sub-stations from the central station with the carrier frequency, either by means of radio transmission and reception in the sub-stations or by direct wire connection. Each of the sub-stations would then modulate with its program the frequency supplied by the central carrier station and after modulation would transmit one of the side bands produced, suppressing the carrier frequency, and remaining side band.

One of the stations may operate upon the carrier frequencies by straight modulation system of course suppressing the carrier in its transmission and preferably also, one of the side bands. The remaining stations could modulate the carrier frequency received by supersonic frequencies different from each other and also modulate the supersonic frequencies by the audio frequency of the radio program. Their transmission would comprise then, one of the side bands produced by the supersonic frequency modulation of the carrier frequency. Or they each might modulate an independent high frequency by the audio frequency, transmitting one side band and suppressing the high frequency and the other side band, in this case the independent high frequency being the same as one of the side bands which would be obtained by modulation of the carrier by

the supersonic frequency as given above. Any other appropriate means may be used for producing the side band transmitted.

The carrier current may be furnished by an organization such as chamber of commerce, and the common wave in addition to use for supplying carrier energy for operation in connection with a sub-station may be used for continuous wave telegraphy by the shifting of the carrier waves slightly, say 500 cycles, without interfering with the proper functioning of the telephone channels. This will provide for the supply of the carrier frequency with regard to the broadcasting stations without additional cost on the part of the chamber of commerce or other central body.

Having now briefly described my invention attention is invited to the accompanying drawings wherein Fig. 1 is a diagram showing the general relationship of the broadcasting stations and the central station. Fig. 2 is a diagram showing the relationship between the frequencies of the broadcasting stations and the carrier frequency station of Fig. 1.

Referring now more particularly to Fig. 1 there is shown at C a diagrammatic representation of the central carrier frequency station such as might be operated by the chamber of commerce. This station as has been previously mentioned is adapted to supply a continuous carrier frequency of an output of say 100 k. w. For the sending of continuous frequency messages, this station might be provided with means for shifting the frequency of its transmission by a very slight amount which however would be sufficient to operate upon a sensitive receiver of the type employed in long distance transmission. This station C will supply to the broadcasting or sub-stations A, B_1 and B_2 the carrier frequency. The supply may be made either by means of a telephone connection as indicated by the lines connecting A, B_1 and B_2, with C, or may be by means of radio transmission in the usual and well known manner.

The sub-station A is provided with means for receiving the incoming frequency from C, and operating thereupon with its audio signalling currents to produce a radio side band with the suppressed carrier of same frequency as C. Preferably one side band only should be transmitted, with the other radio side band eliminated. Similarly sub-stations B_1, B_2 etc. receive energy from C and operate thereupon to produce suitable side bands. Each sub-station will have its own secondary frequency oscillator which serves to space the sub-station radiations correctly from the carrier wave radiation. Current of the secondary frequency at each sub-station will be modulated by the audio signalling frequency in such a manner that the secondary frequency and one side band are suppressed. The remaining secondary frequency side band may be then used to modulate the carrier frequency current received from C also with carrier suppression and elimination of one carrier frequency side band. The remaining carrier frequency side band is then amplified and radiated.

Stations A, B_1, B_2 etc. may be thought of as "single side-band" transmitters, with the corresponding suppressed carriers of frequency corresponding to zero frequency signalling current accurately spaced from frequency of the carrier station C by the agency of secondary frequency oscillators. For station A, this separation is zero, but for station B_1, B_2 the separtions will be different secondary frequencies suitably chosen. With station C used for continuous wave telegraphy by the frequency shifting method, the suppressed carriers of all the sub-stations will correspondingly shift, so that the constant difference is maintained. Thus, transmission of signals through any channel requires joint transmission and reception from the carrier station and a sub-station.

The signalling strengths of the different channels depend on the powers of the carrier wave station C and of the sub-stations. For local work, for example, the sub-station power might be very small, say 100 watts, with a small antenna system, yet in combination with the carrier of 100 k. w. the two are equivalent to a well modulated station of approximately 500 watts. For greater signalling strengths, the sub-stations might have power ratings of 10 kilowatts, which in combination with the 100 kilowatt carrier produce the equivalent of 50 kilowatt stations of the usual type. Thus, by using a single carrier frequency for several channels, the equivalent of a large number of efficient radio telephone stations may be attained, with a much smaller power, and much less possibilities of interference than in the usual arrangements of a separate carrier for each station.

It will be further seen that it will be possible to give more exact control to the carrier frequencies being used as the central stations only would need be equipped with the expensive apparatus for accurately determining the frequency. More exact control, is made possible also by centralizing the responsibility for having the frequency correct. In Fig. 2 is shown a diagram representing the relative allocation of the frequencies produced by the four stations of Fig. 1, clearly indicating the part of the total which is produced by each station. The station C of Fig. 1 produces the carrier frequency indicated at C in Fig. 2, the side bands A of Fig. 2 are produced by the broadcasting station A of Fig. 1, and the bands B_1 and

B_2 are produced by the modulation at stations B_1 and B_2 respectively.

In the receiver for receiving signals transmitted by sub-stations B_1 and B_2, two detectors are provided. The first detector input circuit is tuned so as to receive energy from the carrier C and the desired radio side band. The output of the first detector is a secondary frequency side band corresponding to the sub-station selected. Further selectivity of signals is attained by selective amplification as in the superheterodyne arrangements. The amplified and purified secondary side bands are then reduced to audibility by the second detector in combination with a suitable heterodyning secondary frequency.

It will be apparent that various modifications of the above described system may be constructed which will work equally well to carry out the main idea involved.

Having thus described one embodiment of my invention, it is to be understood that the invention upon which this application is based is broader than the specific embodiment shown and described for the purpose of illustration and that, therefore, it is to be limited only by the scope of the following claims.

I claim:

1. The method of broadcasting a plurality of radio programs which comprises generating a current of a carrier frequency, transmitting said current, modulating said carrier frequency current by an audio frequency current, transmitting one of the side bands produced by said modulation to transmit one of the programs composing said broadcasting, producing a current of a band of frequencies by each of a plurality of audio frequency currents composing the remaining multiplex broadcast programs, spaced by different mean differences with respect to said carrier frequency current such that when said bands are transmitted and received they may be properly combined with said carrier frequency and distinguished from each other by means of double detection to reproduce each of said audio frequency currents, transmitting the bands thus produced, receiving at each of several localities one of the bands and the carrier frequency current thus transmitted and combining said band and said carrier frequency current to reproduce each of said audio frequencies.

2. The method of radio broacasting a plurality of programs which comprises generating a current of a carrier frequency, varying said carrier frequency by a small amount to send a code message, transmitting said carrier frequency current, modulating said carrier frequency current by an audio frequency current, transmitting one of the side bands produced by said modulation to transmit one of the programs composing said broadcasting, producing a current of a band of frequencies by each of a plurality of audio frequency currents, composing the remaining broadcast programs spaced by a different mean difference from said carrier frequency such that when said bands are transmitted and received they may be properly combined with said carrier frequency current and distinguished from each other by means of double detection to reproduce each of said audio frequencies, transmitting the bands thus produced at each of several localities, receiving one of the bands and the carrier frequency current thus transmitted, combining said bands and said carrier frequency current to reproduce each of said audio frequencies, and receiving said carrier frequency and detecting the variations in said carrier frequency to receive said code message.

3. The method of radio broadcasting a plurality of programs which comprises generating a carrier frequency wave, transmitting said wave, modulating said carrier frequency wave by an audio frequency current, transmitting one of the side bands produced by said modulation to transmit one of the programs composing said multiplex broadcast, producing a band of frequencies representative of each of a plurality of audio frequency currents composing the remaining multiplex broadcast programs such that when said bands are transmitted and received they may be properly combined with said carrier frequency wave and distinguished from each other by means of double detection to reproduce each of said audio frequency currents, and transmitting the bands thus produced.

4. The method of broadcasting a plurality of radio programs which comprises generating a carrier frequency wave, varying said carrier frequency by a small amount to send a code message, transmitting said carrier frequency wave, modulating said carrier frequency wave by an audio frequency current, transmitting one of the side bands produced by said modulation to transmit one of the programs composing said broadcasting, producing a band of frequencies representative of each of a plurality of audio frequency currents composing the remaining broadcast programs such that when said frequency bands are transmitted and received they may be properly combined with said carrier frequency and distinguished from each other by means of double detection to reproduce each of said audio frequency currents, and transmitting the frequency bands thus produced.

5. The method of broadcasting a plurality of radio programs which comprises generating a carrier frequency wave, transmitting said wave, producing a frequency band by each of a plurality of audio frequency currents composing the plural broadcast program such that when said bands are trans-

mitted and received they may be combined with said carrier frequency and distinguished from each other to reproduce each of said audio frequency currents, transmitting the bands thus produced, receiving at each of a plurality of localities one of the bands and the carrier frequency wave thus transmitted and combining said side bands and said carrier frequency to reproduce each of said audio frequencies.

6. The method of broadcasting a plurality of radio programs which comprises generating a carrier frequency wave, varying said carrier frequency by a small amount to send a code message, transmitting said carrier frequency wave, producing a frequency band by each of a plurality of audio frequency waves composing said plurality of broadcast programs, such that when said frequency bands are transmitted and received they may be combined with said carrier frequency wave and distinguished from each other to reproduce each of said audio frequencies, transmitting the bands thus produced, at each of several localities receiving one of the frequency bands and the carrier wave, combining said side bands and said carrier frequency to reproduce each of said audio frequencies, and receiving said carrier frequency wave and detecting the variations in the frequency of said wave to reproduce said code message.

7. The method of radio broadcasting a plurality of programs which comprises generating a current of a carrier frequency, varying said frequency, broadcasting a band of frequencies representative of each of a plurality of audio frequency currents composing said broadcast programs such that when said bands are transmitted and received they may be properly combined with said carrier frequency current and distinguished from each other to reproduce each of said audio frequency currents, and transmitting the bands thus produced.

8. The method of radio broadcasting a plurality of programs which comprises generating a current of a carrier frequency, varying said carrier frequency by a small amount to send a code message, transmitting said carrier frequency current, producing a band of frequencies by each of a plurality of audio frequency currents composing the multiplex broadcast programs, such that when said bands are transmitted and received they may be properly combined with said carrier frequency current and distinguished from each other by means of double detection to reproduce each of said audio frequency currents, and transmitting the bands thus produced.

9. The method of radio broadcasting a plurality of programs which comprises independently producing and transmitting a carrier frequency current, independently producing a band of current frequencies representing each of a plurality of broadcast programs by combing the audio frequency currents representing said programs with a high frequency current differing from each other and from said carrier frequency current, transmitting the bands thus produced, receiving at each of a plurality of stations said carrier frequency current and one of said bands, detecting the beat produced by said double detection, and producing thereby an intermediate beat frequency current, detecting said beat frequency and reproducing thereby said audio frequency current.

10. The method of signaling which comprises radiating a carrier wave from one station common to a plurality of channels, and radiating a plurality of bands accurately allocated with respect to said carrier wave and varying in frequency by an audio frequency representative of an audio signal from a plurality of other stations, and receiving conjointly the energy from said common carrier wave station and a selected band station.

11. The method of broadcasting a plurality of radio programs which comprises generating a carrier frequency wave, transmitting said wave, modulating said carrier frequency wave by an audio frequency current, transmitting one of the side bands produced by said modulation to transmit one of the programs composing said broadcasting, modulating a plurality of different intermediate frequency currents by each of the audio frequency currents composing the remaining broadcast programs, modulating said carrier frequency wave by one of each of the pairs of side bands thus produced, transmitting one of the side bands produced by each of said last mentioned modulations at each of several localities, receiving one of the side bands radiated and carrier frequency thus transmitted, and combining said side band and said carrier frequency with the appropriate intermediate frequency energy to reproduce a desired one of said audio frequencies.

12. The method of broadcasting a plurality of programs which comprises generating a carrier frequency wave, varying the carrier frequency by a small amount to send a code message, transmitting said carrier frequency wave, modulating said wave by an audio frequency, transmitting one of the side bands produced by said modulation to transmit one of the programs composing said broadcasting, modulating a different secondary frequency current by each of the remaining programs composing said broadcasting, modulating said carrier frequency wave by one of the side bands produced by each of said last mentioned modulations, transmitting one of the side bands produced by said last mentioned modulation at each of several

localities, receiving one of the side bands transmitted and the carrier frequency wave transmitted, combining said side band and said carrier frequency wave with an appropriate secondary frequency wave to reproduce each of the audio frequency currents, and receiving said carrier frequency wave and detecting variations in said carrier frequency to receive said code message.

13. The method of broadcasting a plurality of radio programs which comprises generating a carrier frequency current, transmitting said current, modulating said current by an audio frequency current representative of one of the broadcasting programs being transmitted, transmitting one of the side bands produced by said modulation, producing currents of varying high carrier frequency varying in frequency by an amount representative of the audio frequency current representative of each of the remaining programs being broadcast and differing from said carrier frequency by a constant mean difference amount to transmit each of the remaining broadcast programs, transmitting the varying high frequency currents thus produced at each of several localities, receiving the carrier frequency current thus transmitted and one of the varying high frequency currents, combining said varying high frequency current and said carrier frequency current to reproduce the original audio frequency current representative of the various radio broadcasting programs.

ELLISON S. PURINGTON.