March 24, 1970 W. OLSEN 3,503,027

REACTIVE TRANSFORMER

Filed Aug. 29, 1968

FIG. 1

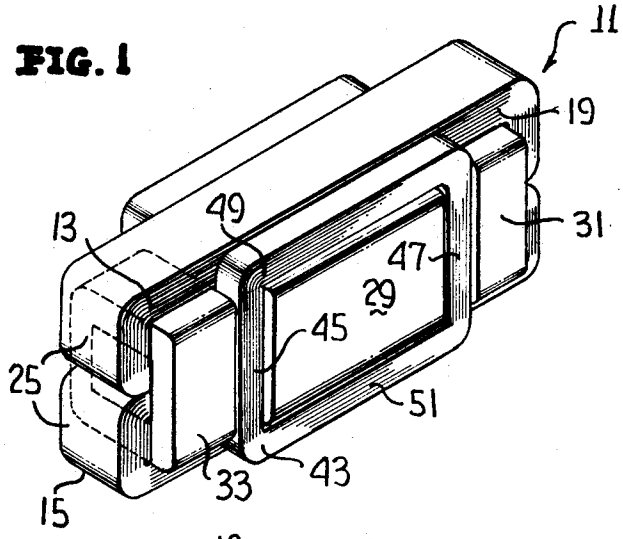

FIG. 2

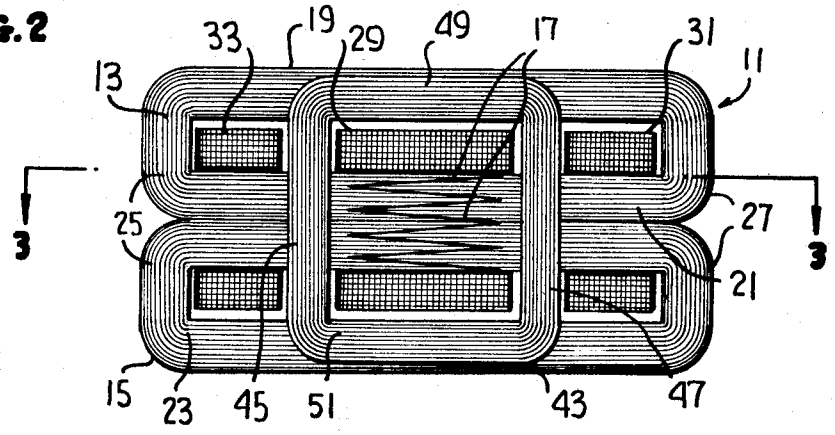

FIG. 3

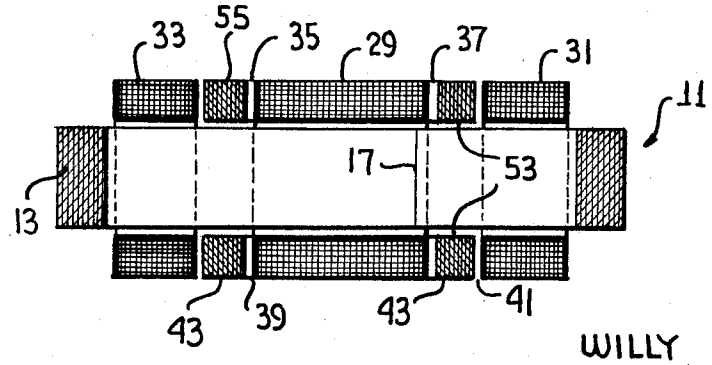

INVENTOR

WILLY OLSEN

BY Harvitz, Lowe & Greene

ATTORNEYS

United States Patent Office 3,503,027
Patented Mar. 24, 1970

3,503,027

REACTIVE TRANSFORMER

Willy Olsen, Mount Vernon, Ill., assignor to Olsen Magnetic, Inc., Mount Vernon, Ill., a corporation of Illinois

Filed Aug. 29, 1968, Ser. No. 756,131
Int. Cl. H01f 21/08
U.S. Cl. 336—165 15 Claims

ABSTRACT OF THE DISCLOSURE

A reactive transformer has a main magnetic circuit comprising a main core of grain-oriented magnetic material having a plurality of closed-loop laminations and having a primary and two secondary coils wound about one leg thereof. Magnetic flux shunt paths are provided across the main core between the primary coil and the secondary coils, the shunt paths each comprising a wound shunt core enveloping a respective portion of the primary coil which extends from a respective side of the main core. The shunt cores are of grain-oriented material and are disposed adjacent said respective sides of the main core such that the layers of the main core and each of the shunt cores are disposed in edge-to-edge relation, thereby providing lamination-to-lamination coupling which is compatible with the direction of grain orientation of the main and shunt cores.

BACKGROUND OF THE INVENTION

The present invention relates to reactive transformers, also known as ballast transformers, and more particularly to a transformer construction useful for regulating the current through arc discharge devices such as neon lamps.

Ballast transformers, conventionally employed to energize discharge lamps, serve two discrete functions. First, upon ignition of the lamp, the transformer provides a sufficiently high voltage to ionize or ignite the lamp. Second, during operation after ignition, the transformer limits the current through the lamp, which, once ignited, provides a relatively small resistance to electrical current. In order to provide the current limiting action, ballast transformers are conventionally of the high leakage reactance type; more specifically these transformers are provided with magnetic shunt paths providing a low reluctance path for leakage reactance flux. The high leakage reactance flux serves to loosely couple the primary winding of the transformer to at least one of the secondary windings so that although the benefits of the transformer turns ratio are available to provide a high voltage to a high impedance or open circuit as soon as current flows in the circuit, the current drain on the loosely coupled secondary winding causes the voltage across the load to drop drastically.

In the past, ballast transformers have generally been provided with both the main or shunt cores formed of stacks of relatively thin, flat laminations of magnetic material. It is well known that the use of grain-oriented magnetic material provides greater flux density in a given amount of core material, with lower core loss and lower exciting current. However, sheet magnetic material used in forming transformer core laminations can only be grain-oriented in one direction and therefore, even though the core may be grain-oriented in its principal direction, the end portions of the core which are transversely arranged with respect to the principal dimension are not grain-oriented in the proper direction. The advantages of grain-orientation are thus lost in the stacked-lamination core.

It is also well known that instead of fabricating a core

by stacking a plurality of thin laminations of flat, magnetic material, the core, both the main and shunt cores, may be produced by winding a continuous relatively thin strip of magnetic material, or by providing a plurality of jointed, closed-loop laminations. If the laminations of magnetic material are likewise grain-oriented the resultant core is completely grain-oriented; that is, the core is grain-oriented both in its principal dimension and transversely thereto thus producing a more efficient core. It is desirable then to provide a high-leakage reactance transformer in which all elements including the high-leakage reactance shunts are formed of core elements having closed-loop laminations.

A prior art attempt to provide a ballast transformer having both the main core and the leakage reactance shunt formed of wound core type elements may be found in U.S. Patent No. 2,771,587 to Henderson. Henderson's transformer comprises a first generally O-shaped wound core member and a second wound core member formed of two generally U-shaped portions respectively arranged on either side of the first core member and in a plane at right angles thereto. At least two coil windings are respectively arranged on the O-shaped wound core member on either side of the U-shaped member. The U-shaped member thus serves as a magnetic shunt for conducting leakage flux across the O-shaped core between the primary and secondary coil windings. Henderson's transformer configuration requires a substantial amount of space to accommodate two cores jutting out perpendicularly from one another. Further, the shunt cores of Henderson have their small end surfaces abutting the main core and thus providing a quite short path for coupling between the cores. Also, the Henderson shunts are U-shaped members and do not provide a closed-loop shunt of low reluctance. In addition, Henderson's configuration lacks adaptability to a system employing a shell-type transformer configuration; that is, a transformer configuration in which the main core has three parallel legs and the primary and two secondary coil windings are wound about the center leg of the core. The shell-type core construction is advantageous over the single core construction for a number of reasons, including improved heat transfer due to the greater exposed core area and greater coupling to the main core.

It is therefore an object of the present invention to provide a reactive transformer utilizing a main core and a high-leakage reactance shunt formed of core elements, formed from closed-loop laminations which is compact in construction and utilizes a minimum of space.

It is another object of the present invention to provide closed-loop core elements for a high-leakage reactance transformer in which all core elements, including the high-leakage reactance shunts, are formed of cores having closed-loop laminations and in which large areas of the main and shunt cores are disposed adjacent one another in grain-oriented relation.

It is still another object of the present invention to provide a high-leakage reactance transformer wherein the main core comprises closed-loop laminations and is of a shell-type configuration, and wherein the core elements including the high-leakage reactance shunts are formed of wound cores.

SUMMARY OF THE INVENTION

In accordance with the broadest aspects of the present invention, a reactance transformer is provided with a continuous-loop main core of grain-oriented material, a primary coil and at least one secondary coil, being wound about one leg thereof. A wound closed-loop shunt core, also of grain-oriented magnetic material, is disposed adjacent the main core and in enveloping relation to that portion of the primary coil which extends beyond the

side of the main core. The shunt core has a first pair of legs lying parallel to the legs of the main core with the laminations of each lying parallel to one another and a second pair of legs extending generally perpendicular to the legs of the main core to provide a high flux leakage path between the main core legs, thereby shunting a portion of the main core flux from the portion of the main core flux path extending through the secondary coil winding.

In a preferred embodiment of the present invention the main core is of a shell-type configuration in which a pair of jointed, continuous-loop cores are placed side-by-side, i.e., with one leg of each core parallel to and abutting one leg of the other core. A primary and two secondary coils are wound about the adjacent legs of each core. The primary coil is disposed between and spaced from the two secondary coils although in an alternative embodiment, the primary coil may be disposed at one end of the adjacent core legs with the secondary coils spaced sequentially therefrom. The portion of the primary coil extending from either side of the main core is enveloped by a respective shunt core which extends across each of the main core legs with the primary coil disposed in the shunt core window. The shunt core and main core laminations are disposed in edge-to-edge relation so that flux coupling occurs on a lamination-to-lamination basis and the grain-orientation in both cores is commonly directed, thereby permitting efficient flux transfer between the main and shunt cores. Suitable spacers of insulating material may be disposed between the main and shunt cores to provide shunt air gaps as desired.

The shunt core in the above-described configuration is preferably rectangular in shape so that one pair of opposing legs of the shunt core span the entire distance across the three legs of the main core, while the remaining pair of shunt core legs extend substantially parallel to and adjacent respective outer legs of the main core throughout the entire length of the shunt core legs. This permits greater flux transfer from main core to shunt core than is possible in the above-referenced Henderson patent; the reason for this is as follows: Henderson has contact between main core and his U-shaped shunt core only at the edge surfaces of the legs of the U-shaped core. The configuration of the present invention permits flux transfer from main core to shunt core along at least one entire leg of the shunt core. This greater area of contact between the main and shunt cores and the common grain-orientations thereof permits highly efficient flux transfer between the cores.

BRIEF DESCRIPTION OF THE DRAWINGS

The above and still further objects, features and advantages of the present invention will become apparent upon consideration of the following detailed description of one specific embodiment thereof, especially when taken in conjunction with the accompanying drawings, wherein:

FIGURE 1 is a view in perspective of a transformer embodying the principles of the present invention;

FIGURE 2 is a front view in plan of the transformer of FIGURE 1; and

FIGURE 3 is a view in section through line 3—3 of FIGURE 2.

DESCRIPTION OF THE PREFERRED EMBODIMENT

Referring now to FIGURES 1 through 3 of the accompanying drawing there is illustrated a preferred embodiment of the reactive transformer of the present invention. The transformer comprises a main core of the shell-type configuration, generally designated by the numeral **11**. In referring to such a core, the term "legs" refers to the core member or members passing through the window of a coil winding and the member or members parallel thereto. The term "yokes" refers to the core members joining the core legs. The term "core window" refers to the space between the legs and yokes of the core.

Main core **11** has three legs and is formed by placing two substantially identical continuous-loop cores **13** and **15** adjacent one another so that adjacent legs of each of the cores constitute a single center leg of the main core **11**. Each of the individual cores **13** and **15** is preferably, though not necessarily, constructed in accordance with the principles set forth in my prior U.S. Patent No. 3,328,737. More particularly, each of cores **13** and **15** is of the jointed, continuous-loop type and is assembled from a plurality of groups of laminations to provide a generally rectangular or square core configuration. The laminations in each group of laminations have their joints arranged in a zig-zag pattern, referred to generally as **17** in the drawings, which pattern advances about the core in a given direction. In the drawing, the zig-zag pattern of butt joints is visible only for the center leg **21** of main core **11**; the two outer legs **19** and **23** also have zig-zag butt joint patterns but are hidden from view. Thus, for example, each group of laminations may include ten distinct laminations and the joints of two of these groups form a V. The joints on one leg of the V are generally unaligned with the joints on the other leg of the V and with the adjacent leg of an adjacent V-shaped configuration of joints. Also, the apices of the V's in each of the groups of laminations are advanced in one direction about the core relative to the apex of the immediately preceeding V-shaped group of joints. In this manner, there is no continuous air gap across the leg of the core so that the air gap due to each individual butt joint is surrounded above and below by a continuous magnetic path which tends to minimize the leakage at each joint. In addition, at least one lamination in each group of laminations is overlapped; the overlapped joints, due to the overall arrangement of the laminations, being staggered relative to all other overlapping joints.

The material of the individual laminations comprising the cores **13** and **15** are preferably grain-oriented in a direction which is concentric with respect to the windows provided in each of cores **13** and **15**. In this way the three legs, **19**, **21** and **23**, and two yokes, **25** and **27** of the main core **11**, are grain-oriented in the same direction.

A primary coil, suitable for receiving and carrying electric current, is disposed about the central leg **21** of main core **11**, extending through the windows of both core members **13** and **15**. In actual construction, coil **29** is generally wound prior to assembly of the main core, there being a coil window formed interiorly of the coil. The individual core members **13** and **15** are then assembled so that central leg **21** of main core **11** extends through the window of coil **29**. Assembly of the transformer in this manner may be accomplished substantially as described in reference to FIGURE 6 of my above-referenced U.S. Patent No. 3,328,737.

Primary coil winding **29** is disposed substantially centrally of central leg **21** of main core **11**. Two secondary coil windings **31** and **33** respectively are disposed on either side of and spaced from primary coil **29**, each of secondary coils **31** and **33** being disposed about central leg **21** of main core **11**. Assembly of the transformer vis-a-vis secondary coils **31** and **33** may be accomplished in substantially the same manner and at the same time as assembly of the core members **13** and **15** in relation to primary coil **29**.

As best illustrated in the top plan view of FIGURE 3, a portion of primary coil **29**, of necessity, extends somewhat beyond the back and front sides of main core **11**. Similarly, secondary coils **31** and **33** extend from the front and back sides of main core **11**. The spaces adjacent the main core **11** between the primary and secondary coils define what may be considered channels **35**, **37**, **39** and **41**. More specifically, channel **35** is defined by opposing sides of the portions of primary coil **29** and secondary

coil 33 which extend behind the main core 11, and by the plane defining the rear surface of main core 11. Similarly, channel 37 extends between coils 29 and 31 along the rear surface of core 11, channel 39 extends between coils 33 and 29 along the front surface of core 11, and channel 41 extends between coils 29 and 31 along the front surface of core 11.

A wound shunt core 43 of generally rectangular or square configuration is disposed adjacent the front side of main core 11 in enveloping relationship about the portion of primary coil 29 extending from the front of main core 11. Opposite sides 45 and 47 of shunt core 43 extend through channels 39 and 41 respectively and must be sufficiently long to span the distance between the outer legs 19 and 23 of main core 11. The remaining pair of opposite sides 49 and 51 of shunt core 43 extend generally parallel to and adjacent main core legs 19 and 23 respectively. Leakage flux transfer between main core 11 and shunt core 43 is therefore accomplished along those portions of sides 45 and 47 which are adjacent central leg 21 of the main core 11, and also along the entire lengths of sides 49 and 51 of shunt core 43 since these sides are adjacent respective legs 19 and 23 of core 11 throughout their length. Shunt core 43 may comprise a single strip of thin magnetic material wound in the rectangular or square configuration illustrated, or may take some other form of closed-loop configuration, such as circular, elliptical, etc. The strip from which core 43 is wound is preferably grain-oriented in the longitudinal direction of the strip. The layers of shunt core 43 are placed against the front of main core 11 in edge-to-edge relationship with the laminations of the main core. The edge-to-edge relationship between the main core laminations and shunt core layers provides an effective low-loss shunt across the legs of core member 11 by taking full advantage of the grain orientations of each of the cores and the lamination-to-lamination coupling between the cores. The losses with this arrangement are substantially lower than they would be if the shunt were placed in the plane of the main core loop, the latter configuration requiring most of the shunted flux to pass through several adjacent layers of main core laminations in a direction normal to the laminations. Suitable air gaps 53 of insulating material may be provided immediately between shunt core 43 and main core 11 if and as desired.

In like manner a second shunt core 55, substantially identical to shunt core 43, may be disposed to the rear of main core 11 to envelope the portion of primary coil 29 extending rearwardly from the core 11. Core 55 fits into channels 35 and 37 and is of sufficient size to span the three legs 19, 21 and 23 of main core 11. The same grain orientation is provided for the strip comprising core 55 as is provided for the strip comprising core 43, and suitable air gaps 53 are provided between the rear of core 11 and shunt core 55. Provision of shunt cores 43 and 55 requires no more space than the basic shell-type transformer configuration absent the shunt core. Specifically, the thickness of the shunt cores (that is the dimension of the shunt cores extending rearwardly of core 11 in the case of shunt core 55 and forwardly of core 11 in the case of shunt core 43 as viewed in FIGURE 3) need be no greater than the distance by which the primary and/or secondary coils 29 and 31, 33 respectively extend from the front and back of the main core 11. Of course, this is not to be construed as limiting the size of shunt cores 43 and 55 for all applications of the transformer of the present invention; that is, in some cases it may be desirable to extend the thickness of the shunt cores and sacrifice the added space required to accommodate this modification.

Alternatively, primary coil winding 29 may be positioned at an end of central core leg 21, so as to change positions with either of the secondary coil windings 31 or 33. The wound shunt cores 43 and 55 would still envelop respective portions of primary coiling winding 29 in such an embodiment.

While I have described and illustrated one specific embodiment of my invention, it will be clear that variation of the details of construction which are specifically illustrated and described may be resorted to without departing from the spirit and scope of the invention as defined in the appended claims.

I claim:

1. A high leakage reactance transformer comprising:
- a first core member comprising a plurality of closed-loop laminations of magnetic material and having at least one leg, said magnetic material having a predetermined grain orientation;
- a primary coil for carrying electric current about a first portion of said one leg;
- a secondary coil for carrying electric current about a second portion of said one leg;
- magnetic shunt means for providing a flux leakage path between said primary and secondary coils, said magnetic shunt means comprising a second core member comprising a plurality of closed-loop laminations of grain-oriented magnetic material disposed on one side of said first core member and separated therefrom by an air gap, said second core member encircling a portion of said primary coil which extends from said one side of said first core member with one leg of said second core member extending between said portion of said primary coil and said secondary coil.

2. A reactive transformer comprising:
- a main core member comprising a core of multiple concentric closed-loop laminations of grain-oriented magnetic material, each layer having first and second opposite edges, said first edges of said layers defining a first side of said main core member and said second edges of said layers defining a second side of said main core member, said main core member having at least first and second legs;
- a primary coil disposed for carrying electric current about said first leg;
- at least one secondary coil disposed for carrying electric current about said first leg and disposed about said first leg and spaced from said primary coil;
- shunt means for providing a magnetic flux shunt path between said second leg and said first leg and located between said primary and secondary coils, said shunt means comprising at least one closed-loop shunt core of multiple concetric layers of magnetic grain-oriented material, said shunt core encircling the portion of said primary coil which extends from said first side of said main core member and being disposed adjacent said first side of said main core member with layers of said shunt core oriented in edge-to-edge relation with said first edges of the layers of said main core member.

3. The transformer according to claim 2 wherein is further provided a relatively high reluctance gap in said shunt path, said gap being disposed intermediate said shunt core and said main core member.

4. The transformer according to claim 3 further comprising:
- a second shunt core, substantially identical to said first-mentioned shunt core, enveloping the portion of said primary coil which extends from said second side of said main core member and disposed adjacent said second side of said main core member with the layers of said second shunt core oriented in edge-to-edge relation with said second edge of the layers of said main core members; and
- a second relatively high reluctance gap disposed intermediate said second shunt core and said main core member.

5. The transformer according to claim 4 further comprising a further secondary coil disposed for carrying cur-

rent about said first leg and spaced from said primary coil along said first leg of said main core member.

6. The transformer according to claim 5 wherein said one secondary coil and said further secondary coil are disposed on opposite sides of said primary coil.

7. The transformer according to claim 2 wherein said main core member comprises three substantially parallel legs, said first leg being disposed centrally between the second and third legs, and wherein the layers of said shunt core are disposed in edge-to-edge relation with and adjacent to the layers in all three legs of said main core member.

8. The transformer according to claim 7 further comprising a further secondary coil disposed for carrying current about said first leg and spaced from said primary coil along said first leg of said main core member.

9. The transformer according to claim 8 wherein said one secondary coil and said further secondary coil are disposed on opposite sides of said primary coil.

10. The transformer according to claim 9 wherein said shunt core has a first section disposed substantially perpendicular to said first leg between said primary coil and said at least one secondary coil on said first side of said main core member, and wherein said shunt core has a second section being disposed substantially perpendicular to said first leg between said primary coil and said further secondary coil on said second side of said main core member.

11. The transformer according to claim 10 further comprising:

a second shunt core, substantially identical to said first mentioned shunt core, and encircling the portion of said primary coil which extends from said second side of the said main core member; said second shunt core member being disposed on said second side of said main core member in substantially the same relation to said three legs and to said primary and secondary coils as is said first shunt core on said first side of said main core member.

12. The transformer according to claim 11 further comprising relatively high reluctance gaps disposed between said main core member and both of said shunt cores.

13. The transformer according to claim 11 wherein at least one section of each of said shunt cores extends parallel to one of said legs of said main core member, the layers in said shunt cores being disposed in edge-to-edge relation with the layers in said main core.

14. The transformer according to claim 2 further comprising a further secondary coil disposed for carrying electric current about said first leg and spaced from said primary coil along said first leg of said main core member.

15. The transformer according to claim 2 wherein at least one section of said shunt core extends adjacent and parallel to a leg of said main core member, the layers in said at least one section being disposed in edge-to-edge relation with the layers in said leg of said main core member.

References Cited

UNITED STATES PATENTS

2,412,914	12/1946	Seastone et al.	336—212
2,483,159	9/1949	Somerville	336—212 XR
2,815,492	12/1957	Henderson	336—165
2,827,614	3/1958	Strecker	336—212 XR

FOREIGN PATENTS

1,528,062	4/1968	France.

OTHER REFERENCES

German printed application No. 1,026,416, Mar. 20, 1958, Kulmer et al.

THOMAS J. KOZMA, Primary Examiner

U.S. Cl. X.R.

336—212, 218, 215