July 26, 1938. C. W. BARNARD 2,124,942

CONDUIT CONNECTER

Filed May 6, 1936

Fig. 1.

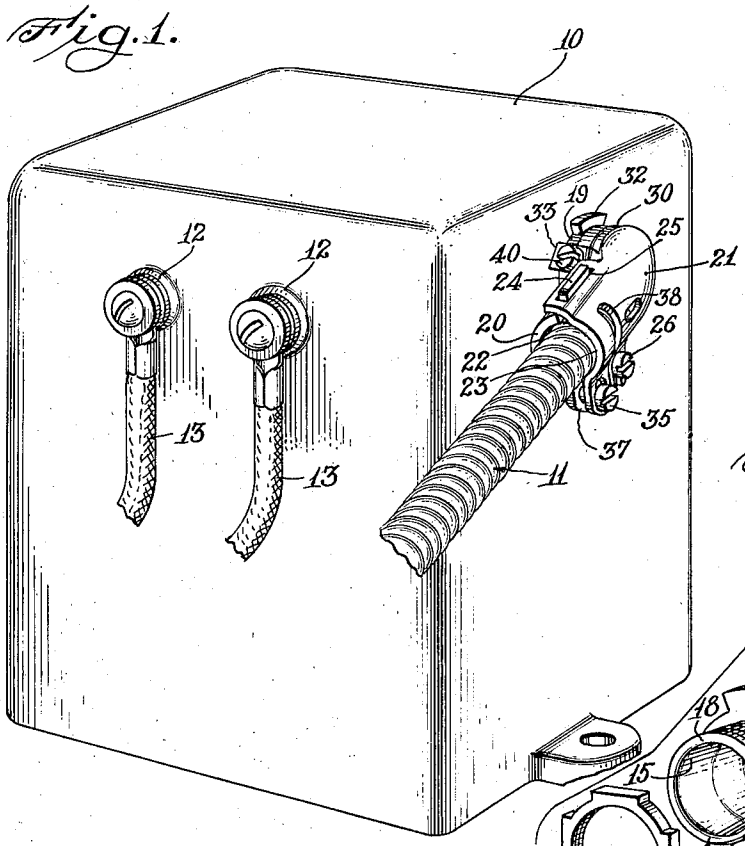

Fig. 4.

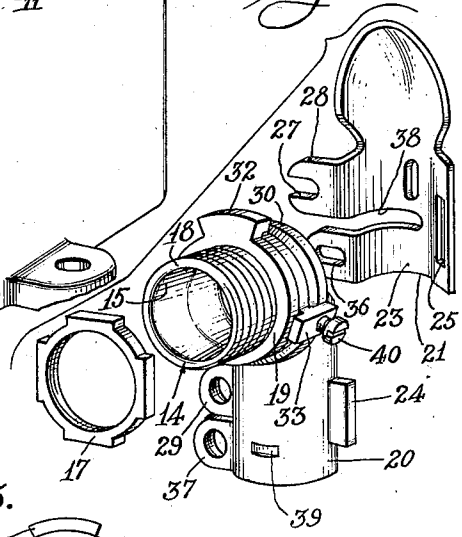

Fig. 2.

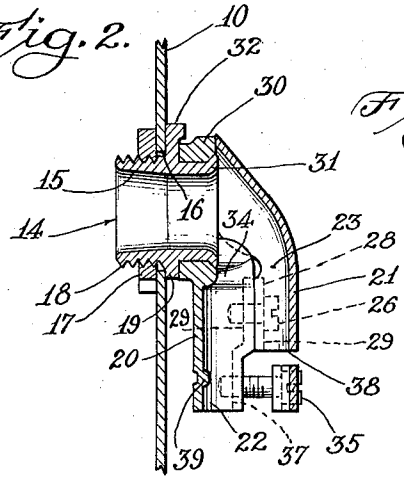

Fig. 3.

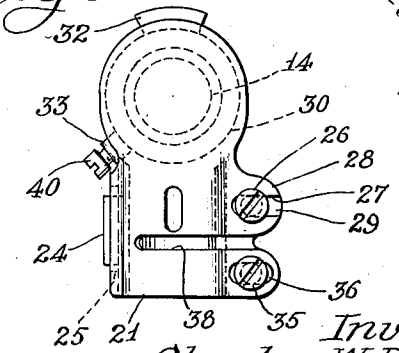

Inventor
Charles W. Barnard
BY
Parker, Carlson, Pitzner & Hubbard
Attorneys.

Patented July 26, 1938 2,124,942

UNITED STATES PATENT OFFICE

2,124,942

CONDUIT CONNECTER

Charles W. Barnard, Chicago, Ill., assignor to Kwikon Company, Chicago, Ill., a corporation of Illinois

Application May 6, 1936, Serial No. 78,075

3 Claims. (Cl. 285—6.5)

My invention relates to connecters and more particularly to connecters adapted to be positioned adjacent an opening in a box or the like and to receive the end of a conduit containing a conductor electrically connected to apparatus within the box.

The primary object of my invention is to provide a connecter of this type having a body portion adapted to be rigidly mounted in alinement with an opening in a box or the like, and a conduit receiving portion connected to the body portion in such manner as to permit a swiveling motion therebetween so that the connecter may be readily attached to the end of a conduit extending in any selected direction with respect to the axis of the body portion of the connecter.

A more specific object of my invention is to provide a connecter including swivel connected body and conduit receiving portions, and means for limiting the amplitude of movement therebetween so as to prevent undue twisting of electrical conductors inserted therein, as well as means for releasably securing the portions of the connecter rigidly together to prevent relative movement therebetween after they have been adjusted to a desired position.

Further objects and advantages of my invention will become apparent as the following description proceeds and the features of novelty which characterize my invention are pointed out with particularity in the claims annexed to and forming a part of this specification.

For a better understanding of my invention reference may be had to the accompanying drawing, in which:

Figure 1 is a perspective view of an encased transformer having a connecter embodying my invention mounted on a side wall thereof.

Fig. 2 is a longitudinal sectional view of the connecter shown in Fig. 1.

Fig. 3 is a front elevation of the connecter shown in Fig. 1, and

Fig. 4 is an exploded perspective view of the connecter shown in Fig. 1.

Although connecters made in accordance with my invention are susceptible of use in a wide variety of other types of installations, they are especially adapted for connecting the ends of conduits, containing conductors connected electrically to the terminals of encased transformers. Accordingly, I have, for purposes of illustration, shown in Fig. 1, a transformer having a rectangular sheet metal casing 10 in which the low voltage leads are connected to conductors encased by a spiral metal conduit 11 which is secured to the casing by a connecter embodying my invention. The high voltage terminals 12 of the transformer are connected by leads 13 to the ignition apparatus of a liquid fuel burner or the like.

Connecters made in accordance with my invention include as their principal elements a hollow body portion, a conduit receiving portion, and means providing a swivel connection therebetween. In the preferred construction illustrated, the connecter includes a hollow cylindrical body portion 14 having a smooth walled passage 15 therein adapted to receive electrical conductors extending from the transformer and to protect the same against abrasion. The body portion 14 is arranged in alinement with a conductor receiving opening 16 in the wall of the transformer casing 10, being preferably insertable therein, and an arrangement is provided for maintaining the same rigidly in place. This arrangement preferably includes a lock nut 17 engaging threads 18 on the rear end of the body portion 14 and cooperating with a laterally extending annular shoulder 19 to maintain the body portion in position on the transformer casing. Transformers of the type illustrated are usually filled with a viscous insulating compound, and it will be noted that the connecter construction illustrated is especially adapted to prevent leakage of this insulating compound from the opening 16 in the casing.

The conduit receiving portion of the connecter is angularly disposed with respect to the body portion thereof and, in the construction illustrated, is arranged substantially at 90° with respect thereto. This conduit receiving portion preferably includes a pair of opposed clamping members 20 and 21. The clamping member 20 is provided with a half-round recess 22 in the front face thereof which cooperates with a corresponding recess 23 in the clamping member 21 to form a conduit receiving opening communicating with the interior of the hollow body portion 14. The clamping member 21 is detachably secured in position on the clamping member 20. The securing arrangement includes a laterally extending ear 24 formed on the clamping member 20 and passing through a registering slot 25 in the clamping member 21. The opposite edges of the clamping members are detachably secured together by a screw 26 passing through a slot 27 formed in a laterally extending ear 28 on the clamping member 21. The inner end of the screw 26 is threaded in a suitably tapped hole formed

in a corresponding laterally extending ear 29 formed on the clamping member 20.

In accordance with my invention, the conduit receiving portion of the connecter is adapted to have a swiveling motion with respect to the body portion thereof in order that the conduit 11 may be received without twisting the same irrespective of its angular position with respect to the axis of the body portion of the connecter. This swivel connection preferably includes an integral circular extension or ring 30 formed on the clamping member 20 and encircling the outer end of the body portion 14. The outer edges 31 of the body portion 14 are flared outwardly by swedging or the like in order to form a lip which serves to prevent axial displacement of the extension 30 and also to provide a smooth edge which will protect the electrical conductors extending thereover against abrasion. The shoulder 19 and flared edge 31 thus cooperate to form an annular groove extending entirely about the body portion 14 of the connecter, the ring 30 being disposed in this groove for adjustable swiveling motion. It will be noted that the clamping member 21 extends across the open end of the body portion 14 substantially into contact with the extension 30 so as to protect the electrical conductors throughout their length.

It is desirable to limit the amplitude of swiveling motion of the conduit receiving portion of the connecter about the axis of the body portion so as to prevent undue twisting of the conductors located in the connecter. Consequently, I preferably provide a lug or lateral projection 32 on the body portion 14 which cooperates with a lug 33 on the clamping member 20 to limit the swinging motion of the latter to an arc of approximately 270°.

In using a connecter of the type described, the body portion 14 is first positioned in the conductor receiving opening of a transformer casing or the like. The conductors connected to the terminals of the transformer may then be inserted into the hollow body portion of the connecter and into the conduit. The end of the conduit is preferably abutted against a shoulder 34 formed within the clamping member 20 so as to accurately position the same. The clamping members 20 and 21 are then drawn together into clamping engagement with the conduit by a screw 35 passing through a slot 36 in a lateral extension on the clamping member 21 and threaded in a suitable tapped hole formed in a corresponding extension 37 on the side of the clamping member 20. It will be noted that the clamping member 21 is preferably split, as indicated at 38, in order that the lower portion thereof may be firmly clamped against the conduit by the screw 35. An inwardly extending lug 39, struck out from the lower side wall of the clamping member 20, engages a groove in the conduit 11 in order to aid in positioning and clamping the same.

The conduit receiving portion of the connecter is then releasably secured in alinement with the conduit 11 by a set screw 40 threaded in a suitably tapped hole formed in the lug 33 and engaging the adjacent surface of the body portion 14. In the particular installation illustrated, the set screw 40 also serves to form an electrical connection between the casing 10 and conduit 11 which is desirable since both of these parts should ordinarily be connected to ground.

It will thus be seen that I have provided a connecter which may be economically manufactured and which includes a minimum number of parts, all of them relatively simple in construction. At the same time, the connecter is adapted to be used in installations where joints of various angles may be encountered.

While I have shown a particular embodiment of my invention in connection with a transformer casing, it should be understood that I do not wish my invention to be limited to the particular construction shown and described, and I intend in the appended claims to cover all modifications within the spirit and scope of my invention.

I claim as my invention:

1. In a connecter the combination of a cylindrical hollow body member having an annular groove in the exterior surface thereof extending about said body member adjacent one end thereof, a pair of opposed generally semicylindrical clamping members disposed substantially at right angles to the axis of said body member and fashioned to receive the end of a conduit inserted therebetween, means for releasably holding said clamping members together in clamped engagement with a conduit, a closed ring formed as an integral extension on one of said clamping members and disposed in said annular groove thereby supporting said clamping members for swiveling movement about the axis of said body member, and means independent of said first-named clamping means for releasably holding said ring in its adjusted position.

2. In a connecter the combination of a cylindrical hollow body member having an annular groove in the exterior surface thereof extending about said body member adjacent one end thereof, a pair of opposed generally semicylindrical clamping members disposed substantially at right angles to the axis of said body member and fashioned to receive the end of a conduit inserted therebetween, means for releasably holding said clamping members together in clamped engagement with a conduit, a closed ring formed as an integral extension on one of said clamping members and disposed in said annular groove thereby supporting said clamping members for swiveling movement about the axis of said body member, a set screw threaded in said ring and engageable with the bottom of said groove for releasably holding said ring in its adjusted positions, and means including cooperating projections on said ring and body member for positively limiting the extent of relative adjusting movement therebetween.

3. In a connecter the combination of a cylindrical hollow body member having an annular groove in the exterior surface thereof extending about said body member adjacent one end thereof, a generally cylindrical conduit receiving member disposed substantially at right angles to the axis of said body member and fashioned to receive the end of a conduit inserted therein, means for releasably holding said conduit receiving member in engagement with a conduit inserted therein, a generally ring-shaped extension on said cylindrical member and projecting into said annular groove thereby supporting the same for swiveling movement about the axis of said body member, and means independent of said first-named means for releasably holding said ring-shaped member in its adjusted position.

CHARLES W. BARNARD.