(No Model.)

J. H. GARNER.

HOE.

No. 456,142. Patented July 21, 1891.

Fig. 1.

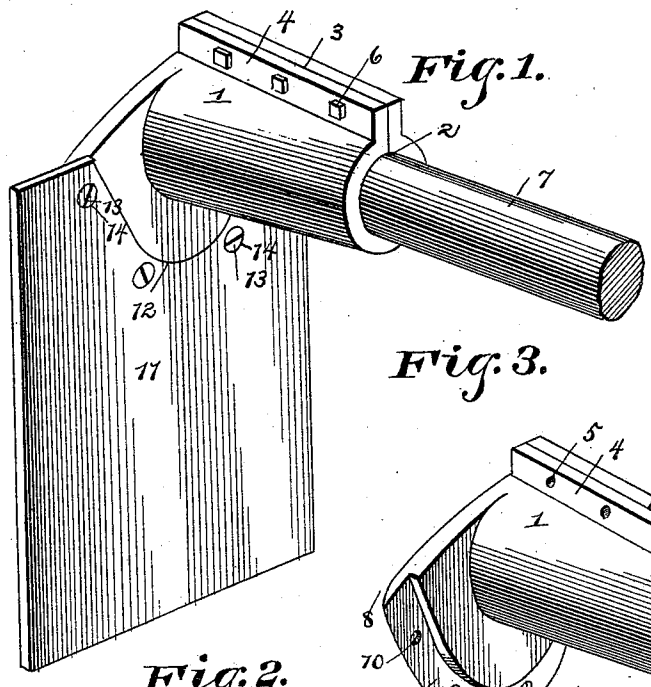

Fig. 3.

Fig. 2.

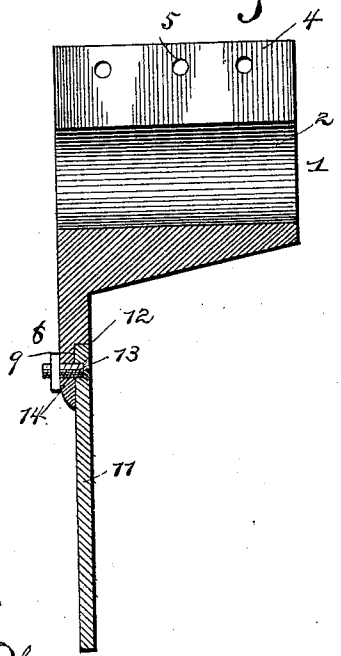

Fig. 4.

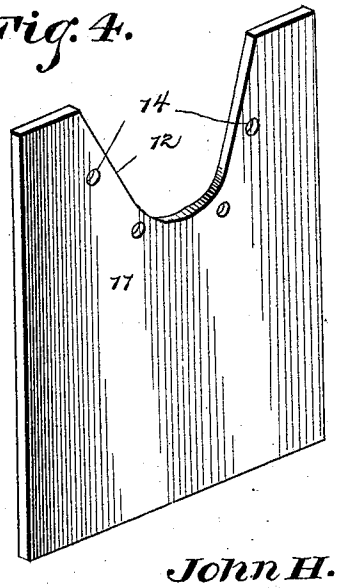

Witnesses:

B. S. Ober.

W. S. Tindall.

Inventor

John H. Garner.

By his Attorneys,

C. A. Snow & Co.

THE NORRIS PETERS CO., PHOTO-LITHO., WASHINGTON, D. C.

UNITED STATES PATENT OFFICE.

JOHN H. GARNER, OF KINGWOOD, WEST VIRGINIA.

HOE.

SPECIFICATION forming part of Letters Patent No. 456,142, dated July 21, 1891.

Application filed February 10, 1891. Serial No. 380,926. (No model.)

To all whom it may concern:

Be it known that I, JOHN H. GARNER, a citizen of the United States, residing at Kingwood, in the county of Preston and State of West Virginia, have invented a new and useful Hoe, of which the following is a specification.

This invention relates to improvements in hoes; and the objects in view are to provide a hoe the blade of which may be removed when worn or in which various styles of blades may be employed, and, furthermore, to provide a cheap and convenient means for attaching the hoe to the handle.

Other objects and advantages of the invention will appear in the following description, and the novel features thereof will be particularly pointed out in the claim.

Referring to the drawings, Figure 1 is a perspective of a hoe constructed in accordance with my invention. Fig. 2 is a vertical section of the same. Fig. 3 is a detail in perspective of the handle-socket. Fig. 4 is a similar view of the blade.

Like numerals of reference indicate like parts in all the figures of the drawings.

In practicing my invention I form, preferably of malleable iron, a cylindrical socket 1, having a longitudinal handle-receiving bore 2 and split longitudinally upon its upper side, as at 3, and from the edges thereof rise flanges 4. The flanges 4 are provided at intervals with perforations 5, those of one flange preferably being threaded and from those of the opposite flange into said threaded perforations pass binding or clamping bolts 6. By loosening the binding-bolts the lower end of the handle 7 of the hoe may be inserted into the socket and securely bound in position by a retightening of the bolts. At the rear end of the cylindrical socket there is formed a depending segmental flange 8 of suitable depth and having its inner face provided with a curved shallow recess 9, perforated at intervals, as at 10. Into this recess fits the upper edge of the blade 11, which may be of any size and style adapted for the purpose in view. The upper edge of the blade is provided with a curved recess 12, which snugly fits and conforms to the wall of the recess 9, so that the bottom of the latter recess overlaps the back of the blade and is secured to said blade by a series of bolts or screws 13, passed through openings 14, formed in the blade adjacent to the edge of the recess 12 and passing into the perforations 10 in the bottom of the recess 9. By removing the screws 12 it will be obvious that various styles and sizes of blades may be substituted one for the other, whereby the whole is designed for various kinds of work; also that long and short handles may be conveniently connected to the head of the hoe. It will be obvious that the socket may be forged or cast, as may be desired, but is preferably forged.

Having described my invention, what I claim is—

The herein-described hoe, consisting of the cylindrical handle-receiving socket longitudinally split and having the edges terminating in outwardly-disposed flanges having perforations, bolts passed through said perforations, said socket at its rear end having a depending curved flange, the front face of which is provided with a shallow curved recess having perforations, the blade, the upper edge of which is curved to fit the wall of the recess and provided with perforations opposite those of the flange, and the bolts passed through said perforations of the blade and flange, substantially as specified.

In testimony that I claim the foregoing as my own I have hereto affixed my signature in presence of two witnesses.

JOHN H. GARNER.

Witnesses:

JOSEPH M. GODWIN,

JAS. L. STONE.