(12) INTERNATIONAL APPLICATION PUBLISHED UNDER THE PATENT COOPERATION TREATY (PCT)

(19) World Intellectual Property Organization
International Bureau

(43) International Publication Date
6 October 2016 (06.10.2016)

WIPO | PCT

(10) International Publication Number
WO 2016/154679 A1

(51) International Patent Classification:
A61C 7/00 (2006.01) *A61C 19/06* (2006.01)
A61C 7/08 (2006.01) *A61C 17/34* (2006.01)

(21) International Application Number:
PCT/AU2016/050244

(22) International Filing Date:
31 March 2016 (31.03.2016)

(25) Filing Language: English

(26) Publication Language: English

(30) Priority Data:
2015901173 31 March 2015 (31.03.2015) AU

(71) Applicant: **KIEL CORPORATION PTY LTD** [AU/AU]; C/o GMK Partners Pty Ltd, Level 27, 150 Lonsdale Street, Melbourne, Victoria 3000 (AU).

(72) Inventors: **LO, Thomas**; 30 Grange Road, Toorak, Victoria 3142 (AU). **HALL, Michael**; 45 Herlihys Road, Templestowe Lower, Victoria 3107 (AU).

(74) Agent: **GRIFFITH HACK**; Level 10, 161 Collins Street, Melbourne, Victoria 3000 (AU).

(81) Designated States *(unless otherwise indicated, for every kind of national protection available)*: AE, AG, AL, AM, AO, AT, AU, AZ, BA, BB, BG, BH, BN, BR, BW, BY, BZ, CA, CH, CL, CN, CO, CR, CU, CZ, DE, DK, DM, DO, DZ, EC, EE, EG, ES, FI, GB, GD, GE, GH, GM, GT, HN, HR, HU, ID, IL, IN, IR, IS, JP, KE, KG, KN, KP, KR, KZ, LA, LC, LK, LR, LS, LU, LY, MA, MD, ME, MG, MK, MN, MW, MX, MY, MZ, NA, NG, NI, NO, NZ, OM, PA, PE, PG, PH, PL, PT, QA, RO, RS, RU, RW, SA, SC, SD, SE, SG, SK, SL, SM, ST, SV, SY, TH, TJ, TM, TN, TR, TT, TZ, UA, UG, US, UZ, VC, VN, ZA, ZM, ZW.

(84) Designated States *(unless otherwise indicated, for every kind of regional protection available)*: ARIPO (BW, GH, GM, KE, LR, LS, MW, MZ, NA, RW, SD, SL, ST, SZ, TZ, UG, ZM, ZW), Eurasian (AM, AZ, BY, KG, KZ, RU, TJ, TM), European (AL, AT, BE, BG, CH, CY, CZ, DE, DK, EE, ES, FI, FR, GB, GR, HR, HU, IE, IS, IT, LT, LU, LV, MC, MK, MT, NL, NO, PL, PT, RO, RS, SE, SI, SK, SM, TR), OAPI (BF, BJ, CF, CG, CI, CM, GA, GN, GQ, GW, KM, ML, MR, NE, SN, TD, TG).

Published:

— *with international search report (Art. 21(3))*

(54) Title: AN ORTHODONTIC DEVICE

Figure 1

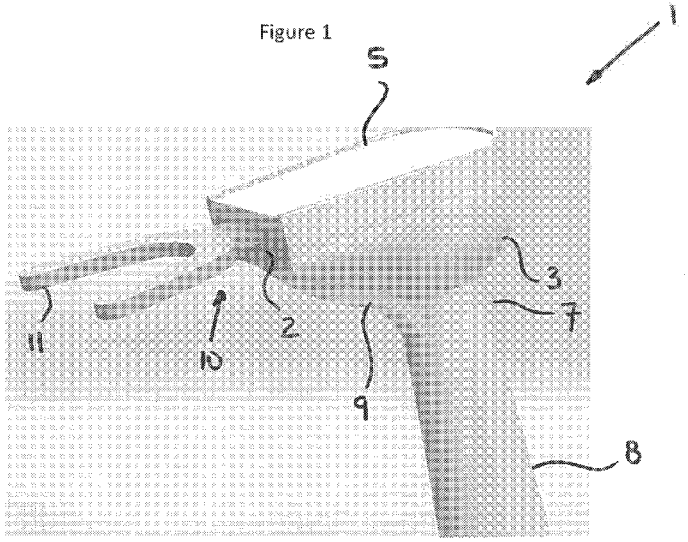

(57) Abstract: An orthodontic device, the device comprising: a dental member adapted to contact dentition and to vibrate while contacting the dentition for accelerating bone growth; and a convertor that is adapted to convert energy from an energy source into vibratory motion of the dental member.

WO 2016/154679 A1

AN ORTHODONTIC DEVICE

TECHNICAL FIELD

This invention relates to an orthodontic device for applying a therapeutic vibratory force to the dentition of a patient.

BACKGROUND

The term “dentition” is understood herein to mean a single tooth or a plurality of teeth, whether disposed on the lower or upper dental arch of a patient. The term includes by way of example front teeth, back teeth, upper teeth, lower teeth, all teeth simultaneously and any combinations thereof.

The term “periodontium” is understood herein to refer to the tissues that surround and support the teeth holding them in position in the upper jaw (maxilla) and the lower jaw (mandible).

Orthodontic treatments have been used both for cosmetic treatments and therapeutic treatments. In a cosmetic manner, orthodontics can improve the visual appearance and alignment of teeth and in medical procedures orthodontic treatments can correct growth anomalies and assist reconstructive procedures after surgery and accidents.

The duration of a course of orthodontic treatment is partially dependent on the rate at which a given patient grows and removes bone tissue; this process is referred to as bone turnover, bone remodelling or osteogenesis. Although many orthodontic treatments employ the application of pressure (force) to the dentition, it is a combination of these forces and bone remodelling around the dentition that allows guided tooth movement.

The amount of force applied to the dentition during orthodontic treatment is adjusted at regular intervals to provide continuous, appropriate and accurate application of pressure. Without these adjustments, the diminishing or inappropriate pressure application can delay or halt treatment. There is a temptation to assume that increasing the pressure on teeth during orthodontic movement should increase the rate of tooth movement. However, this is not the case in orthodontics. Excessive pressure can lead to a temporary restriction or elimination of blood supply to the bone surrounding the teeth to be moved. Some cells (preosteoclasts) responsible for the bone remodelling process are recruited from the blood vessels. A diminished blood supply at this time reduces the cells available for this action and can reduce the rate of orthodontic movement.

These modalities of orthodontic treatment where forces are applied to the teeth can cause discomfort and pain to the patient and as such it is desirable to design

improved orthodontic devices to reduce the discomfort or reduce the duration of the treatment during where the discomfort is caused.

SUMMARY OF THE INVENTION

The invention provides an orthodontic device, the device comprising: a dental member adapted to contact dentition and to vibrate while contacting the dentition for accelerating bone growth; and a convertor that is adapted to convert energy from an energy source into vibratory motion of the dental member.

The term "vibrate" as used herein is understood to include movement that may be described as oscillating movement.

The term "osteogenesis", "bone remodelling" and "bone turnover" as used herein is understood to incorporate the process of laying down new bone and bone tissue formation in a living organism.

The orthodontic device is configured to reduce the pain associated with orthodontic treatment by applying vibratory massage to the dentition. Furthermore, the application of vibratory forces to the dentition decreases the duration of orthodontic treatment time by increasing the rate of bone turnover.

The vibrational forces applied to the dentition are transmitted to the periodontium. This force stimulates blood flow and therefore blood supply around the dentoalveolus of the upper and lower jaw. The vibrational forces also increase the expression of RANKL cytokine which is responsible for the activation and survival of osteoclasts (a cell that plays a main role in bone remodelling). The increase in the number of osteoclast can also therefore increase the rate of bone remodelling of the dentoalveolus. The increased rate of bone remodelling thus results in a reduction in the duration of orthodontic treatment.

The vibratory force applied to the dentition is preferably light to moderate force. The terms light to moderate force is comparative terminology and each person using the device will have a personal view on what is mean by the term. The term does not mean force that is severe, rough or violent in manner such that application of the vibratory force can adversely affect the dentition, surrounding periodontium or orthodontic appliances. Although tooth enamel is one of the strongest natural substances in the body (having an ultimate tensile strength (UTS) of around 83 GPa; and a Mohrs hardness value of 5), it can be chipped and cracked by contact with hard objects, especially in high load concentrations.

The application of vibratory force to the periodontium via the dentition also provides a relief from the pain caused from orthodontic treatment i.e. relief from the constantly applied pressure to the dentition of a patient.

When using traditional braces, a series of fixed brackets/attachments are adhered to the dentition, which are then interconnected by a guide wire. The brackets/attachments are located on the dentition at predetermined locations such that the forces applied to each individual tooth will produce a movement of the tooth in a predetermined direction to translate, tip, torque or rotate each tooth or a combination of translation, tip, torque or rotation. As the teeth and brackets move along the guide wire, these movements may cause the edge of the bracket to dig into or bind to the wire, slowing the progression of treatment. The application of gentle vibratory forces to the teeth at regular intervals can reduce the possibility of binding, thereby assisting in achieving full and expedient expression of intended orthodontic goals.

In contrast to the traditional fixed braces some orthodontic treatments use sequential aligners or active removable appliance(s), one or multiple of such appliances can be used on the individual arches. Like traditional braces, the retainer applies force at predetermined locations to the dentition to move teeth into desired positions. Aligners/appliances that can be removed by the patient allow more freedom during eating and drinking. Removable aligners/appliances further allow a patient to maintain a traditional oral hygiene routine, as brushing and flossing is not hampered by traditional fixed appliances. However, as the patient can remove the aligners/appliances, sometimes retainers are not fully seated on reinsertion. The application of vibrations to the dentition, whilst the aligner/appliance is in place on the dentition, assists in seating the aligner/appliance correctly against the dentition. Correct seating of the aligner/appliance provides advantages in maintaining the correct forces on the dentition, thereby maximising efficacy and keeping the orthodontic treatment result aligned to the forecast treatment plan. As such, the problems associated with incorrect placement of the aligner/appliance are reduced by use of the orthodontic device herein described.

The vibrations of the orthodontic device provide pain relief during orthodontic treatment in a number of different ways. Vibrations provide a cyclic loading i.e. a repeated application and removal of force to the dentition. The loading and unloading cycle provides a form of anaesthesia to the treated area, in this case the site at which the load is applied to the dentition. The frequencies for effective pain relief will vary from one patient to another. However, pain relief will be experienced with vibrations in the range of 1 Herz (Hz) to 150Hz, more particularly in the range of 60Hz to 120Hz.

The vibrations also provide pain relief due to a sensory overload applied to a local area. This treatment area is bombarded with the sensation from the vibrations, providing pain relief through activation of alternative nerve stimulation providing a 'blocking' or soothing effect and reducing the perception of painful nerve stimuli. This occurs in a similar manner to massage, thermal treatments or transcutaneous nerve stimulation through the Gate Control Theory of pain relief.

Furthermore, the vibrations stimulate blood flow to the periodontium experiencing the pressure, which reduces ischemia in the bone, tissue and support structures of the teeth while the teeth are moving. Ischemia is caused by a compromised blood supply and glucose supply such that cellular metabolism cannot be maintained leading to death of tissue or localised ischemia.

An increased rate of bone remodelling, or bone turnover, is experienced by the patient when applying vibrations in a frequency range of between 0.1 Hz to 90 Hz. Vibrations in this range increase the activity of osteoblast and osteoclast cells (which assist in the turnover of bone).

The device offers a low cost, drug free, pain management solution that can be driven by connection to a powered or electric toothbrush or other power device in the comfort of a patient's home.

In one embodiment of the invention, the convertor may comprise: a driving member adapted to be coupled to the energy source; and a driven member coupled to the dental member, wherein the driving member is movable relative to the driven member such that the driven member is urged towards or pushed away from the driving member, thereby introducing a vibratory motion into the dental member.

The driving member and the driven member may be magnets.

A bearing or series of driven and driving magnets are used to convert a vibrating action into rotational movement. In turn, the rotational movement drives a magnet/magnets that interact with the series of driven magnets to generate the required vibrational frequencies in the dental member.

The purpose of the convertor is to reduce and/or minimise any feedback or pressure placed on the energy source ie. the motor of the electric toothbrush. This protects the motor of the electric toothbrush from being over worked or burning out. The reduced load on the energy source reduces deterioration in battery life of the electric toothbrush when powering an orthodontic device according to the invention.

The driving magnet and the driven magnet may be oriented in magnetic opposition to one another.

The driven magnet may comprise a first and a second portion coupled to opposing sides of the dental member.

The driving magnet may be adapted to be coupled to the energy source via a drive shaft.

A plurality of driving magnets may be coupled to the energy source, the plurality of driving magnets are disposed about the drive shaft.

The plurality of driving magnets may be disposed about the drive shaft in arrays, such that the driven magnet coupled to the dental member is disposable between, above or below the arrays of driving magnets.

The plurality of driving magnets in each array may be magnetically oriented such that each subsequent driving magnet may be in opposing magnetic orientation to an adjacent driving magnet.

The drive shaft may comprise a first portion and a second portion, the first and second portions being detachably coupled to one another.

The first portion of the drive shaft may be permanently coupled to the device and the second portion of the drive shaft is adapted to be coupled to the power source.

When the device is in use, the driving magnet may be driven around the drive shaft in a rotating or reciprocating motion.

The term “reciprocating” as used herein includes a rotating or oscillatory motion that varies in frequency, displacement or direction, for example a rotation through less than 360 degrees which may be driven in opposing directions, back and forth about an equilibrium position.

The device may further comprise a guide arranged so that, in use, the driven magnet translates coaxially with the drive shaft along the guide.

The dental member may vibrate in a direction transverse to the drive shaft.

The dental member may vibrate at a frequency between 0.1 to 150 Hz.

The dental member may vibrate at a frequency between 1 to 90 Hz.

In use of the device, a patient places the dental member in contact with the dentition. As the patient exerts pressure from their lower and upper jaw onto the dental member, the dental member is compressed thereby increasing the transmission of vibrations from the dental member to the dentition of the patient and into the periodontium surrounding the patient’s dentition. The device is intended to be used for a prescribed period on a daily basis while orthodontic treatment is ongoing.

In some embodiments of the invention, the dental member may comprise a mouthpiece and a connector, the mouthpiece being configured for intraoral location and the connector being coupled to the driving magnets to engage with the convertor.

The mouthpiece may comprise a resilient planar member.

The mouthpiece may have a first surface for contact with upper dentition of a patient, and a second surface for contact with lower dentition of the patient, simultaneously.

The mouthpiece may provide active engagement and guidance to the dentition. Alternatively, the mouthpiece may act as a passive guide through the intention of guided eruption.

The mouthpiece may have soft protruding members to assist in the maintenance of oral hygiene or facilitate gingival massage.

The first and second surfaces may be contoured to cooperate with the dentition of a predetermined patient.

The dental member and the convertor may be selectively coupled together to correspond to the dentition of a predetermined patient.

The dental member and the convertor may be removably coupled together.

The dental member may be integrally formed with the mouthpiece.

The dental member may be configured to detach from the mouthpiece under a predetermined load.

The dental member may further comprise an actuator to separate the mouthpiece from the dental member.

The actuator may comprise a first cam surface configured to cooperate with a second cam surface of the mouthpiece.

The actuator may be movably engaged with the dental member, such that relative movement between the actuator and the dental member drives the first cam surface of the actuator against the second cam surface of the mouthpiece, thereby separating the mouthpiece from the dental member.

The device may further comprise a support upon which the dental member is supported.

The energy source may be an electric toothbrush.

The device transmits vibrations to the periodontium via the teeth. Where all of a patient's teeth are undergoing therapeutic treatment, it is beneficial that the mouthpiece is moulded to a shape where as many upper and lower teeth are in contact with the mouthpiece as possible. This facilitates an even application of force to the periodontium and accordingly, an even level of treatment. However, this may be contrasted with treatment or rectification of a bone growth defect where the treatment focused around a localised area of the patient's dentition. For localised treatment, an orthodontist or dental professional can modify the mouthpiece or dental member of the device to provide an increased vibratory transmission in the localised area to correspond to a patient's treatment needs.

To improve contact with the dentition, the dental member can be selected from a range of different sizes that correspond to the sizes of the patient's dental arches. In some embodiments, the dental member is bespoke and manufactured from a dental mould to correspond to the dentition of a specific patient. In other embodiments the dental member is made from a thermo-softening material which can be warmed, moulded and cooled to allow tailoring of the mouthpiece to the shape of the dental arch of a patient.

In another embodiment of the invention, there is provided an orthodontic device, the device comprising: a dental member adapted to contact dentition and to vibrate while contacting the dentition for accelerating bone growth; an energy source to provide energy for operating the device; and a convertor that is adapted to convert energy from the energy source into vibratory motion of the dental member.

In another embodiment of the invention, there is provided an orthodontic device for use with an electronic toothbrush, the device comprising: a dental member adapted to contact dentition and to vibrate while contacting the dentition for accelerating bone turnover; and a convertor that is adapted to convert energy from an energy source into vibrating motion of the dental member, wherein the convertor is adapted to be removably coupled to the electronic toothbrush, with the toothbrush providing the energy source for operating the device.

The orthodontic device is configured for use with an electric toothbrush, such that when the cleaning head of the toothbrush is removed, an orthodontic device according to some embodiments of the invention can be attached thereto. The workings of the electric toothbrush do not require any modification, and the functionality of the toothbrush is not altered by using the device therewith.

Orthodontic treatment is generally carried out over a one to two year period, and as such patients are reluctant to spend on products that will become redundant in a short period of time. However, an electric toothbrush has a much longer product lifespan and is used daily, regardless of orthodontic treatment. Accordingly, it is more cost effective for a patient to purchase the orthodontic device as an attachment for use with a new or existing toothbrush: when the treatment is concluded, the device can be discarded without loss of utility of the toothbrush.

In a further embodiment of the invention, there is provided an orthodontic kit, the kit comprising: a device as described above; and a secondary dental member.

The secondary dental member may comprise a mouthpiece of unequal size to a mouthpiece of the dental member of the device.

The energy source of the device may be an electronic toothbrush.

Various features, aspects, and advantages of the invention will become more apparent from the following description of embodiments of the invention, along with the accompanying drawings in which like numerals represent like components.

BRIEF DESCRIPTION OF THE DRAWINGS

Embodiments of the invention are illustrated by way of example, and not by way of limitation, with reference to the accompanying drawings, of which:

Figure 1 is a perspective view of an orthodontic device according to one embodiment of the invention;

Figure 2 is a top perspective view of the device of Figure 1 with a cap of the device removed to illustrate an internal component layout around a dental member;

Figure 3 is a partially exploded perspective view of a convertor, and the dental member of Figure 1 outside of the device illustrating a support beneath the dental member;

Figure 4 is an exploded perspective view of the components of the convertor from Figure 3, illustrating a plurality of magnetic arrays;

Figure 5 is a perspective view of the internal components of the convertor of Figure 1, fully assembled to the dental member;

Figure 6 is a top perspective view of Figure 2, illustrating the alignment of the convertor and an internal bearing around a drive shaft;

Figure 7 is a schematic view of an array of magnets configured to provide a vibratory input to the dental member; and

Figure 8 is a sectional view of a separable dental member, illustrating the disposition of a mouthpiece within a dental member;

Figure 9 is a sectional view of the separable dental member of Figure 8, illustrating the separation of the dental member from the mouthpiece;

Figure 10 is a perspective view of a load limiting dental member;

Figure 11 is an enlarged sectional view of a frangible connection between a load limiting dental member and an associated mouthpiece

Figure 12 is a side view of the load limiting dental member of Figure 10;

Figure 13 is a schematic diagram of a software sequence for a power source of the device;

Figure 14 is a perspective view of further embodiment of an orthodontic device according to the invention;

Figure 15 is a top view of the orthodontic device of Figure 14;

Figure 16 is a perspective view of selected components of the device of Figure 14, to illustrate the internal components thereof; and

Figure 17 is a side view of the device of Figure 16 illustrating an attachment between a convertor and a dental member of the device.

DETAILED DESCRIPTION OF EMBODIMENTS

The invention will now be described more fully hereinafter with reference to the accompanying drawings, in which various embodiments, although not the only possible embodiments, of the invention are shown. The invention may be embodied in many different forms and should not be construed as being limited to the embodiments described below.

Whist the device 1 is described herein in relation to use with an electric or electronic toothbrush, which provides an energy (i.e. power) source for the device, it is understood that other power sources or devices having a power source can be coupled to the device 1 to provide the required power source, for example an electric flossing device or the like.

The invention provides an orthodontic device 1, the device 1 comprising: a dental member 10 adapted to contact dentition and to vibrate while contacting the dentition for accelerating bone growth; an energy source to provide energy for operating the device 1; and a convertor 6 that is adapted to convert energy from the energy source into vibratory motion of the dental member 10.

With reference to the Figures 1 to 7, an orthodontic device 1 is illustrated in accordance with one embodiment of the invention. The device 1 includes a body 3 in which the convertor 6 is housed and a cap 5 that can be removed to provide access to the convertor 6 within the body 3.

Referring to Figure 1, the body 3 is disposed at a first end 7 of a neck 8. The neck 8 is an elongate member having a substantially cylindrical form. Neck 8 tapers as it extends towards the first end 7. The neck 8 is configured to mount to a drive shaft of an electric toothbrush (not show in the Figures). The neck 8 is further configured to house the drive shaft of the electric toothbrush therein. As the device 1 is handheld, the drive shaft of the toothbrush will be covered, at least partially, by the neck 8 to keep a patient's fingers away from any moving mechanisms of, or associated with, the device 1.

The body 3 and neck 8 can be formed from separate components; however, they are preferably moulded integrally to reduce gaps therebetween and other openings in the device 1 that could allow moisture to contact the convertor 6. In some embodiments, the body 3 and neck 8 are intended for use with water. In these

embodiments the body 3 and neck 8 can be provided with drainage hole to provide from water egress and facilitate drying of the internals of the device 1.

In one embodiment the body 3 and neck 8 are integrally moulded from a tough resilient plastic material such as nylon. However other plastic materials, such as polypropylene, ABS, or PLA to name a few, will also be suitable. A softer rubber such as a styrene-based thermoplastic elastomer can be used to over-mould sections of the device 1 around the cap 5 and neck 8 to provide additional grip when attaching the device 1 to a power source or removing the cap 5 from the body 3. Over-moulding the device 1 can also be used in a decorative manner to make the device 1 more user friendly and endearing to children and adolescents.

The neck 8 is shaped to be elongate and narrow to keep the weight of the device 1 to a comfortable level to be held by a patient when the device 1 is in use.

At a first end of the body 3, farthest from the neck 8, there is provided a cap 5. The cap 5 is configured to snap-fit onto the body 3 and seals an aperture 4 in the body 3. The aperture 4 provides access to the convertor 6 and other internal components of the device 1. The aperture 4 further allows the dental member 10 to be removed from the device 1 and replaced.

It is intended that the device 1 is used for a period of about 5 minutes for two to three sessions each day. As such the dental member 10 is subject to deterioration and will need to be changed over long periods of orthodontic treatment. Furthermore, the movement of the dentition that occurs during orthodontic treatment can leave the dental member 10 incorrectly aligned to the patient's dentition.

When the cap 5 is removed from the body 3 the patient can remove the entire convertor 6, as illustrated in Figures 3 and 4, providing clear access to the dental member 10 such that the dental member 10 can be removed and replaced with a new dental member 10 for continued use of the device 1.

The dental member 10 comprises a mouthpiece 11, a bridge 14 and a connector 16. When the cap 5 is removed the patient will only see part of the dental member 10, as illustrated in Figure 2. This is because the connector 16 is obscured by the convertor 6, to which it is coupled.

The mouthpiece 11 is configured as a wishbone in a semi U-shaped form. The mouthpiece 11 can be configured to match the bite of the patient i.e. the shape and width of a patient's dental arches. A range of different mouthpieces 11 are configured to have different lengths, widths, thicknesses and shapes to best fit the patient's bite i.e. a connection surface between the patient's lower and upper jaw where the upper and lower teeth come together for cutting and biting. In some orthodontic treatments it may only be necessary to provide vibrations to a select portion of the dentition where

treatment is localised. However, the mouthpiece 11 is preferably configured to provide contact with as much of a patient's dentition as possible, simultaneously, to give a more even transmission of vibrations into the periodontium.

The mouthpiece 11 is made from a resilient material for example silicone or other suitable elastomer. The mouthpiece 11 is made from a non-toxic material that is suitable for intraoral location. The patient places the mouthpiece 11 between the upper and lower dentition and bites down on the mouthpiece 11. The resilience in the material of the mouthpiece 11, under the pressure of the patient's jaws, provides an even contact surface and even vibrational transmission medium into the dentition of the patient.

The mouthpiece 11 can be manufactured separately from the remainder of the dental member 10. In this manner, the mouthpiece 11 can be removed from the dental member 10, without the need to open the device 1 and expose the convertor 6. Restricting a user's access to the internal components of the device 1 can provide safety benefits, particularly for young users.

In some embodiments, the mouthpiece 11 can be moulded to correspond to the bite of a patient and the orthodontist can take impressions of the patient's dentition prior to manufacturing and supplying the mouthpiece 11. In an alternative embodiment the material selected for the mouthpiece 11 is a heat sensitive plastic, allowing the patient to heat the mouthpiece 11 in hot water before hand-moulding or biting the softened mouthpiece 11. These actions will adjust the mouthpiece 11 or leave an impression on the mouthpiece 11 corresponding to the patient's dentition. When the softened mouthpiece 11 has reached the desired configuration, it is plunged into cold water to set the shape or impression into the mouthpiece 11. This bespoke forming of the mouthpiece 11 provides a tailored and more even vibration transmission from the mouthpiece 11 to the patient's dentition.

The dental member 10 can be made from multiple layers of material. For example, the outer layer of the mouthpiece 11 is made from a soft silicon layer that the patient can bite into and an inner layer of the mouthpiece is made from a harder thermoform plastic. When manufactured in layers having different material properties, the dental member 10 can be sufficiently internally hard to effectively transmit vibrations along its length, wherein the outer layer of the mouthpiece 11 can be soft or thermo-softening to allow for customisation. When made of different materials, an inner layer of the dental member 10 can be over-moulded with a thermoplastic outer layer. In this manner the dental member 10 can be integrally formed with a combination of desirable material characteristics.

The range of dental members 10 are configured to have the same shape and size of connector 16 for mechanically interacting with the convertor 6. However, the mouthpiece 11 can be supplied in a range of different sizes that can be moulded, cut and otherwise customised by the orthodontist to customise the device 1 for the patient.

The dental members 10 can provide texturized surfaces such as protrusions or ridges to adjust the contact between the dental member 10 and the dentition of a user. It further contemplated that the dental member 10 can be attached to a solid or rigid mouthpiece 11 for transmitting vibrations to the user's dentition.

The connector 16 is disposed on the dental member 10 at an opposing end to the mouthpiece 11, illustrated in Figure 4. The connector 16 is C-shaped and configured to cooperate with the convertor 6 to transmit vibrations into the mouthpiece 11. The cooperation between the connector 16 and the convertor 6 will be described in more detail in relation to the workings of the convertor 6.

The dental member 10 further comprises a bridge 14, which connects the mouthpiece 11 to the connector 16, illustrated in Figure 2. In one embodiment the components of the dental member 10: mouthpiece 11, bridge 14 and connector 16, are integrally formed.

The bridge 14 is housed within the body 3 of the device 1 and spans between the connector 16 and the mouthpiece 11. The bridge 14 is positioned and supported by a support member 12 and a pair of guide members 18. Essentially, the guide member 18 support the dental member 10 in a lateral direction across the body 3, while the support 12 supports the dental member 10 in a vertical direction within the body 3 and also in a fore-aft direction of the device 1.

The support member 12 is seated within the body 3 in proximity to the stiffener 9. The support 12 is made from a hard material such as a plastic and both supports the weight of the dental member 10 and the fore-aft placement of the dental member 10 as it protrudes from the body 3 of the device 1.

The support 12 is illustrated in Figure 3. The support 12 surrounds a secondary opening 2 of the body 3, through which the dental member 10 exits the body 3.

The support 12 has a first portion 13a that is substantially rectangular and a lower portion 13b that extends down into the body 3 (see Figure 5). The first portion 13a has a recess 15 therein, which is configured to receive the bridge 14. Around a perimeter of the recess 15 are a pair of shoulders 15a, which correspond to a pair of indents 14a in the bridge 14 (see Figure 4). In this manner, when the dental member 10 is placed into the device 1, the dental member 10 can only seat in the correct location and thus patient error in wrongly placing the dental member 10 is reduced.

The lower portion 13b of the support 12 is shaped to correspond with an under side profile 19 of the bridge 14. The support 12 guides the patient when fitting the bridge 14 around the aperture 2 and also improves vibration transmissions along the bridge 14. As the dental member 10 is made from a resilient material, there are vibration losses along the length of the bridge 14, the support 12 aids in reducing the vibration losses to maximise the vibrations transmitted to the mouthpiece 11.

The first portion 13a of the support 12 further comprises a pair of ears 32 which locate the support 12 within the body 3. The lower portion 13b of the support 12 positions the support 12 against the body 3 and controls the level at which the dental member 10 sits relative to the body 3. This governs the height at which the dental member 10 protrudes from aperture 2 of the device 1. The ears 32 locate the support 12 in the fore-aft direction and locate support 12 against the inside of the body 3. The support 12 is restricted from moving forward in the fore-aft direction by the ears 32 and restricted from moving backwards in the fore-aft direction by the indents 14a in the bridge 14.

The guides 18 are illustrated in Figures 2, 3 and 4 as a pair of cylindrical pillars. The cylindrical form is efficient for internal packaging space within the body 3; however, the guides 18 could be formed from a variety of different shapes. The outer surfaces of the guides 18 are preferably smooth and free of edges or protrusions that could snag dental member 10 thereby reducing the lifespan of the dental member 10.

The guides 18 extend from the body 3 of the device 1 and are positioned on either side of the bridge 14, in contact with the bridge 14. The guides 18 assist the patient in correctly inserting the dental member 10. The guides 18 further reduce unwanted movement of the bridge 14 within the body 3 of the device 1. Similar to the support 12, the guides 18 assist in minimising vibrational losses along the bridge 14 within the body 3 of the device 1.

The convertor 6 is illustrated in Figures 4 to 6. Figure 4 illustrates the convertor 6 within the device 1 in an exploded view to increase clarity; Figure 5 illustrates the convertor 6 assembled with the body 3 removed; and Figure 6 illustrates the convertor 6 packaged within the body 3 of the device 1.

Returning to Figure 4, the convertor 6 is driven by a drive shaft or motor attachment 34 that is configured to attach to and be driven by the drive shaft of an electric toothbrush. While the drive shaft of some electric toothbrushes rotate others reciprocate, and do not provide a fully rotating output. The device 1 is configured to be used with both a rotating output and/or a reciprocating output.

Figure 6 illustrates the dental member 10 is place within the device 1, with the cap 5 removed. A top portion 22 of a central spindle 20 is placed upon the motor

attachment 34. Displaced within the top portion 22 is an upper driving magnet 26, which is rotated as the central spindle 20 rotates, whether this motion comprises full rotations about the attachment 34 or a reciprocating motion, back and forth in a circular arc, about the attachment 34.

The spindle 20 can be formed from a hard plastic or other rigid material. Alternatively the spindle 20 can be formed from a soft rubberised plastic.

Figure 4 illustrates a central portion 23 and a bottom portion 24 of the spindle 20. The bottom portion 24 of the spindle 20 can be free of driving magnets, wherein the upper driving magnet 26 induces the vibrational motion of the dental member 10. In some embodiments the bottom portion 24 is provide with a single magnet 27. In other embodiments, the bottom portion 24 of the spindle 20 is provided with a plurality of driving magnets 27 disposed therein.

As the spindle 20 is rotated, the upper driving magnet 26 and the lower driving magnets 27 rotate simultaneously about the attachment 34, that is to say that the upper 26 and lower 27 driving magnets are rotated about the attachment 34 in a fixed relationship to one another.

The C-shaped connector 16 comprises a pair of arms 17 that curve around the central portion 23 of the spindle 20, in a symmetrical manner. The C-shaped connector 16 further comprises a driven magnet disposed therein.

In one embodiment of the connector 16 the driven magnet comprises two portions, a left driven magnet 28 and a right driven magnet 29, disposed at opposing ends of the arms 17, illustrated in Figure 4. The C-shaped connector 16 is positioned between the top portion 22 and lower portion 24 of the spindle 20 with one arm 17 located on each of the opposing sides of the attachment 34.

The top portion 22 and lower portion 24 of the spindle 20 are joined by a central portion 23, about which a bearing 36 is located. The bearing 36 is coaxially aligned to the attachment 34 and provides a cylindrical outer surface 37 upon which the left driven magnet 28 and right driven magnet 29 are placed in contact. Through the bearing 36, the rotational movement of the attachment 34 drives the spindle 20 thereabout.

The top portion 22 of the spindle 20 can be removed from the remainder of the spindle 20 by sliding the two components in opposing directions from one another. To assemble the spindle 20, the bearing 36 is placed within the spindle 20 in contact with the internal splines 21 thereof, and a keying feature, illustrated in Figures 4 and 5 as a pair of notches 20a on the top of the spindle 22 are aligned with the central spindle 23. Once aligned, the top of the spindle 22 is slid into place on the central spindle 23, trapping the bearing 36 between the top spindle 22 and bottom spindle 24.

When the device 1 is activated the driven magnets 28, 29 are urged back and forth across the surface 37 of the bearing 36. The bearing 36 provides a guide for the movement of the driven magnets 28, 29. The bearing 36 also provides a hard surface upon which the driven magnets 28, 29 travel, the surface 37 being configured to sustain the everyday wear and tear that will be experienced through the recommended usage of the device 1.

As the attachment 34 rotates the spindle 20 is rotated. This motion of the spindle 20 in turn rotates the top portion 22 and bottom portion 24 of the spindle 20, while the connector 16, arms 17 and the left 28 and right 29 driven magnets are not rotated. As the driving magnets 26, 27 rotate over and under the driven magnets 28, 29, the magnetic forces between the driving and driven magnets urge the connector 16 back and forth across the bearing surface 37. The magnetic attraction and repulsion between the driving and driven magnets thereby causes a vibratory motion to be transferred from the connector 16 into the bridge 14 and into the mouthpiece 11 where the vibratory motion if transmitted into the dentition of the patient.

The vibratory motion induced into the mouthpiece 11 is transverse to the plane of the mouthpiece 11 i.e. the vibrations are in a direction substantially aligned with an axis running between the driving magnets 26, 27 of the convertor 6.

Figure 7 illustrates a linear schematic layout of the relative magnetic orientations between the driving magnets 26, 27 and the driven magnet 28. The upper driving magnet 26 will attract and repel the driven magnet 28 as it passes the magnet 28 on its rotary path about attachment 34 (the rotary path is linearly represented from left to right across Figure 7). When the north end of the driving magnet 26 passes the north face of the driven magnet 28, magnet 28 is repelled and thereby forced along the bearing surface 37 in a direction away from the driving magnet 26.

The driving magnet 27 can be a single magnet but is shown in Figure 7 to comprise a series of driving magnets 27 which are disposed in alternating magnetic orientations. Figure 7 illustrates the driven magnet 28 in a position closest to the driving magnet 27 and farthest from the driving magnet 26. Figure 7 further illustrates a dotted line image of driving magnet 26' and driven magnet 28' is an opposing position, where the driven magnet 28' is closest to the driving magnet 26' and farthest from the driving magnets 27. The extreme positions of the driven magnet 28, 28' define a sinusoidal trajectory 40 along which both of the driving magnets 28, 29 will travel, when the device 1 is in use.

As the driven magnets 28, 29 are coupled to the dental member 10 the sinusoidal trajectory 40 defines the frequency of the vibratory input into the dental member 10 and thereby into the mouthpiece 11. The orientation, number of lower

driving magnets, and strength of the driving and driven magnets can be varied to produce a desired force and frequency vibration response in the mouthpiece 11.

The magnets 26-29 are configured to produce a vibratory response in the mouthpiece 11 of between 1 and 150Hz. In another embodiment, the vibrations are configured to be between 1 and 90 Hz.

In some embodiments, the device 1 can further comprise a timer that is activated and driven by the power source. The timer is set to bleep or otherwise alert the user after a predetermined use period of the device 1: this is preferably between 3 and 5 minutes. In this manner children and adolescents are alerted to the end of a prescribed usage session and encouraged to use the device 1 until they hear the alert.

The dental member 10 is designed to have a lifespan or approximately 3-months, although different materials could be employed to increase the performance life of the dental member 10. If used in accordance with the instructions of an orthodontist or dental professional the mouthpiece 11 will continually wear but will still appear functional; however, as the dental member 10 deteriorates the effects of the convertor 6 and transmission of the vibrations will start to change, altering the frequency and hence the efficacy of the device 1.

The device 1 is configured for a usage of at least 2 sessions of 3 minutes per day, although it is preferable to use the device 1 for 3 sessions of about 5 minutes each day. These session times are intended to provide a general level of pain relief and accelerated bone turnover. However, it should be noted that the device 1 can be used at the patient's discretion and whenever the patient is feeling discomfort from the orthodontic treatment.

The patient can attach the device 1 to the drive shaft of their existing electric toothbrush after brushing. Accordingly, there is no requirement for the toothbrush to be customised to receive or power the orthodontic device 1. After the patient has finished using the device 1, the device can be removed from the toothbrush and a cleaning or flossing head replaced on the brush.

The mouthpiece 11 is placed in the patient's mouth between the upper and lower dentition. Once in place, the patient gently bites down onto the mouthpiece 11 placing as many teeth from both the upper and lower arches in contact with the mouthpiece 11 as possible.

Once the mouthpiece 11 is in place contacting the dentition, the patient activates the toothbrush and the gentle vibrations will begin to transmit through the dental member 10.

As the device 1 works by transmitting vibrations to the periodontium via the teeth, the patient should try to maintain contact with the vibrating mouthpiece 11 for the whole duration of each session. A session of 5 minutes duration is recommended.

After a period of about 3 months a new dental member 10 should be fitted to the device 1. This will account for wear and tear of the mouthpiece 11 and movement of the dentition during treatment.

The mouthpiece can include indicator dye strips, to indicate the amount of use of the device. These indicator strips will also alert a user to the need to replace the mouthpiece as the colour of the strip will fade through use of the device.

The resilient mouthpiece 11 can be rinsed with cold water for cleaning, or removed from the device 1 for soaking in cleaning solution. Where a bespoke mouthpiece 11 has been made for a patient, hot water should be avoided for cleaning the mouthpiece 11 as this can lose the customised shape and affect the fitment and efficacy of the mouthpiece 11.

Bespoke mouthpieces can be formed using 3D printing techniques or stereo lithography, where the patient's dentition is scanned to produce a 3D model of the dentition. The 3D model is then used to create a mouthpiece that contours and fits cooperatively with the patient's dentition.

In some embodiments, the dental member 10 can be configured to provide a flexible or resilient portion to the bridge 14. The resilient portion is contemplated to provide a load limiter for the device. In the event that a patient is applying excessive pressure onto the device, the resilient portion of the bridge 14 can deform to reduce the load transmitted therethrough. The resilient portion of the bridge 14 can, in this manner, provide protection for the dentition of the patient, and also protect the convertor 6 of the device from being overloaded.

In one embodiment of the invention there is provided a separable dental member 10 and mouthpiece 11, illustrated in Figures 8 and 9. The dental member 10 is provided with an opening for receiving and retaining the detachable mouthpiece 11 therein. The section of the mouthpiece 11 received in the recess has a sloped surface 47 for interacting with an actuator.

The actuator, illustrated as a release button 41 in Figure 8, initiates separation of the dental member 10 from the mouthpiece 11. The button 41 is disposed within the dental member 10 and is in contact with both the dental member 10 and the sloped surface 47 of the mouthpiece 11. A first end 44 of the button 41 is moderately rounded and configured for contact with a finger of a user, to actuate the button 41. A second projecting end 43 of the button 41 is imbedded within the dental member 10. The two ends of the button are connected by a shaft 45, having a sloping recess 46 therein.

As the button 41 is depressed, illustrated in Figure 9, the projecting end 43 is forced against a lower projection 48 of the dental member 10 which deforms the dental member 10. The deformation of the dental member 10 allows the shaft 45 of the button 41 to move within the dental member 10. This resulting movement pushes the recess 46 of shaft 45 against the sloped surface 47 of the mouthpiece 11, acting like a cam, this forces the mouthpiece 11 away from the button 41 and thereby away from the dental member 10. Once the mouthpiece 11 is separated from the dental member 10, the user can remove and replace the mouthpiece 11.

Further illustrated in Figures 8 and 9 are a pair of frangible portions 42 in the dental member 10. These frangible portions 42 are tuned to break under excess pressure applied to the mouthpiece 11. When the frangible portions 42 shear, load from the mouthpiece 10 can no longer be transmitted into the device 1 or to the convertor 6 or motor attachment 34. This safety features prevents over loading of both the dentition of the user and the motor driving the device.

Figure 10 illustrates a dental member 10 having a removable mouthpiece 11. The mouthpiece 11 is configured to be integrally formed with the dental member 10 and to shear-off from the bridge 14 of the dental member 10 under excess load. As the user bites down on the mouthpiece 11, the load applied by the dentition to the mouthpiece 11 is transmitted to the convertor 6. If this load is sustained the convertor 6 must work against this load to continue to transmit vibrations into the mouthpiece 11. When the load from the user's dentition exceeds a predetermined threshold the frangible connection 42, between the dental member 10 and the mouthpiece 11, breaks. Disconnecting the mouthpiece 11 from the dental member 10 thus prohibits load from the user's dentition being transmitted back into the device 1 and the convertor 6.

In the dental member of Figures 10 to 12, the bridge 14 of the dental member 10 is formed in a C-shape having two extending jaws 49 that transition into the mouthpiece 11 via the frangible section 42. An end of the mouthpiece is configured to have a T-shape 50. The dental member 10 is formed such that the T-shaped end 50 is disposed between the two jaws 49 of the bridge 14. When the frangible connection 42 breaks, the T-shaped end 50 is retained between the jaws 49 of the bridge 14 to prevent the mouthpiece 11 from fully detaching from the dental member 10 but still preventing load transfer between the mouthpiece 11 and dental member 10.

Figure 11 is an enlarged view of the frangible section 42 between the dental member 10 and the mouthpiece 11. Figure 12 illustrates an alternative embodiment of a similar frangible section 42. The strength of the frangible portion 42 will be limited by the choice of material from which to manufacture the dental member 10. However, the

thickness of the frangible portion 42 (and more specifically the cross-sectional area of the frangible portion 42) can be varied to tune the breaking load to a predetermined level.

The device 1 can be provided as a kit containing individual dental members 10 for use with the device 1. These dental members can be of a customisable form, or a variety of sizes, e.g. small, medium and large, to provide the patient with varying levels of customisation. The dental member 10 can further be manufactured in decorative plastics e.g. colours or other decorative finishes that encourage younger patients to encourage regular use of the device 1 and to conform to their treatment plan. It is also contemplated that the device 1 can be sold as a package comprising the orthodontic device 1 with an electric toothbrush handle or alternative power source included.

In an alternative embodiment of the invention, the device 1 can be powered by a software/hardware driven motor. In this embodiment, the motor of the electric toothbrush is coupled to the dental member, and the motor is configured to run in different modes, creating the necessary oscillatory pulses for the device 1. It is contemplated that the toothbrush can be programmed with an orthodontic mode in which a series of predetermined treatment cycles can be installed. For example a patient treatment regime may ideally comprise a 2 minute session at 60-100Hz followed by a 2 minute session at 1-30 Hz: this cycle is programmed into a mode of the motor, which a patient can select when using the toothbrush. Figure 13 illustrates a process for such an embodiment.

Ideally an orthodontic professional will assist the patient in selecting the appropriate dental member 10 and mouthpiece 11. However, where a customisable mouthpiece 11 is supplied a patient is enabled to customise the mouthpiece 11 at home with the use of hot water, as described herein.

Referring now to Figures 14 to 17, a further embodiment of the invention is illustrated as device 201. All reference numerals prefixed “2” correspond to the features as described in reference to device 1, with it being understood that the description of the like parts of the first embodiment applies to the second embodiment, unless stated to be otherwise.

This embodiment contains similar features to that of orthodontic device 1 as described herein, however, the individual assemblies of this embodiment are grouped together to simplify the assembly process. Furthermore, a body 203 and neck 208, and dental member 210 and bridge 214 are adapted to be manufactured through moulding processes, such as injection moulding.

The device 210 comprises a body 203 which houses the convertor mechanism 206 therein. A cap 205 is provided to allow the body 203 to be opened and closed for access to the convertor 206 and to engage and disengage the mouthpiece 210.

The dental member 210 comprises a mouthpiece 211, abridge 214 and a connector 216. The connector 216 allows the dental member 210 to be disconnected from the device 201 and changed or replaced as desired. The mouthpiece 211 is made from a non-deformable material eg. plastic. The mouthpiece 211 is U-Shaped in plan view to approximate to the shape of a user's dentition. The cross-section of the mouthpiece 211 is an H-Shape providing an upper and lower U-Shaped recess for receiving an insert 211a. The insert 211 can be provided solely for the upper dentition, solely for the lower dentition or for the upper and lower dentition simultaneously.

The upper and lower inserts 211a can further comprises a plurality of surface protrusions 211b for providing adhesion between the inserts 211a and a biting edge of the user's dentition. In Figures 14 and 16 the surface protrusions 211b are illustrated as a regular dispersion of raised dimples. Alternative shapes and configurations can also be applied to the upper and lower inserts 211a to assist in guiding and positioning the user's teeth in relation to the device 201 to maintain a desired orientation of the device 201 during use.

The inserts 211b can be formed from a soft rubber, thermoplastic or thermo-softening material to allow an orthodontist of dental technician to reshape or form the inserts 211b to align with the teeth of a user. As described above this could be done by heating the inserts 211b moulding them and then allowing them to cool and harden. Alternatively, the material of the inserts 211b can be moulded an then set by heat treatment or chemical treatments to set and hold the desired form.

Illustrated in Figure 14, the bridge 214 is integrally formed with the mouthpiece 211, which is integrally formed with the connector 216. These three components can be formed separately or can be moulded as a single unit as illustrated in this embodiment. In some embodiments the mouthpiece 211 is manufactured separately from the bride 214 and connector 206 to allow the mouthpieces 211 to be shipped separately to orthodontists and dentists for matching, sizing and clipping to the bridge and connector components of the dental member 210.

The connector 216 is formed with a predominantly C-shaped end to receive a convertor 206 therein. Furthermore, as illustrated in Figure 16 the connector 216 can provide a seat to received and retain the cap 205. A secondary mounting for the cap 205 is provided on the bridge 214 such that the cap 205 and the bridge 214 seal the convertor 206 within the body 203 and the dental member 210 protrudes outwardly therefrom.

The bridge 214 can comprise a frangible portion as described in reference to Figure 10 and 12 of device 1. This frangible portion is not fully visible in Figure 17 with the cap 205 and dental member 210 in place. However, the bridge 214 is contemplated to perform in the same manner as bridge 14 of the dental member 10, having two extending jaws 49 that transition into the mouthpiece via the frangible section 42 of Figures 10 and 12.

Figure 16 and 17 illustrated the dental member 210 attached to the convertor 206, Figure 16 without the cap 205 and Figure 17 with the cap 205. Underneath the bridge 214 of the device 201 in Figure 17, a frangible support member 212 is disposed to support the weight of the dental member 210 when in use. In some embodiments the support 212 has no frangible section.

Figures 16 and 17 illustrate the dental member 210 without the body 203, positioned for use with the convertor 206. A central spindle 220 extends through the convertor 206 movably engaged with a motor attachment 234. The convertor 206 is driven by a drive shaft or motor attachment 234 that is configured to attach to and be driven by the drive shaft of an electric toothbrush.

Inside the convertor 206 is at least one driven magnet and a plurality of driving magnets, as described above in relation to device 1. The driven magnets are coupled to the dental member 210 where a sinusoidal trajectory defines the frequency of a vibratory input into the dental member 210 and thereby into the mouthpiece 211. The orientation, number of driving magnets, and strength of the driven and driving magnets can be varied to produce a preselected force and frequency vibration response in the mouthpiece 211.

By integrating the components of the convertor 206 and motor attachment 234, the moving components of the device 201 are bound together making it easier to insert and remove the entire assembly from the body 203, if required. Integrating the components of the convertor 206 and motor attachment 234 further provides advantages in that the opportunity to lose, drop or incorrectly position components within the device 201 when removing or replacing the dental member 210 are greatly reduced.

It will be appreciated by persons skilled in the art that numerous variations and modifications may be made to the above-described embodiments, without departing from the scope of the following claims. The present embodiments are, therefore, to be considered in all respects as illustrative and not restrictive.

Unless defined otherwise, all technical and scientific terms used herein have the same meaning as commonly understood by one of ordinary skill in the art to which this invention belongs. Although any methods and materials similar or equivalent to those

described herein can also be used in the practice or testing of the present invention, a limited number of the exemplary methods and materials are described herein.

It is to be understood that, if any prior art publication is referred to herein, such reference does not constitute an admission that the publication forms a part of the common general knowledge in the art, in Australia or any other country.

In the claims which follow and in the preceding description of the invention, except where the context requires otherwise due to express language or necessary implication, the word “comprise” or variations such as “comprises” or “comprising” is used in an inclusive sense, i.e. to specify the presence of the stated features but not to preclude the presence or addition of further features in various embodiments of the invention.

THE CLAIMS:

1. An orthodontic device, the device comprising:

a dental member adapted to contact dentition and to vibrate while contacting the dentition for accelerating bone growth; and

a convertor that is adapted to convert energy from an energy source into vibratory motion of the dental member.

2. The device of claim 1, wherein the convertor comprises:

a driving member adapted to be coupled to the energy source; and

a driven member coupled to the dental member,

wherein the driving member is movable relative to the driven member such that the driven member is urged towards or pushed away from the driving member, thereby introducing a vibratory motion into the dental member.

3. The device of claim 2, wherein the driving member and the driven member are magnets.

4. The device of claim 3, wherein the driving magnet and the driven magnet are oriented in magnetic opposition to one another.

5. The device of claim 4, wherein the driven magnet comprises a first and a second portion coupled to opposing sides of the dental member.

6. The device of any one of claims 3 to 5, wherein the driving magnet is coupled to the energy source via a drive shaft.

7. The device of claim 6, wherein a plurality of driving magnets are adapted to be coupled to the energy source, and the plurality of driving magnets are disposed about the drive shaft.

8. The device of claim 7, wherein the plurality of driving magnets are disposed about the drive shaft in arrays, such that the driven magnet coupled to the dental member is disposable between, above or below the arrays of driving magnets.

9. The device of claim 8, wherein the plurality of driving magnets in each array are magnetically oriented such that each subsequent driving magnet is in opposing magnetic orientation to an adjacent driving magnet.

10. The device of any one of claim 6 to 9, wherein the drive shaft comprises a first portion and a second portion, the first and second portions being detachably coupled to one another.

11. The device of claim 10, wherein the first portion of the drive shaft is permanently coupled to the device and the second portion of the drive shaft is adapted to be coupled to the power source.

12. The device of any one of claims 6 to 11, wherein in use the driving magnet is driven around the drive shaft in a reciprocating motion or a rotating motion.

13. The device of any one of claims 6 to 12 further comprising a guide arranged so that in use the driven magnet translates coaxially with the drive shaft along the guide.

14. The device of any one of claims 6 to 13, wherein the dental member can vibrate in a direction transverse to the drive shaft.

15. The device of claim 14, wherein the dental member can vibrate at a frequency between 1 to 120 Hz.

16. The device of claim 15, wherein the dental member can vibrate at a frequency between 1 to 90 Hz.

17. The device of any one of claims 3 to 16, wherein the dental member comprises a mouthpiece and a connector, the mouthpiece being configured for intraoral location and the connector being coupled to the driving magnet to engage with the convertor.

18. The device of claim 17, wherein the mouthpiece comprises a resilient planar member.

19. The device of claim 17 or claim 18, wherein the mouthpiece has a first surface for contact with upper dentition of a patient, and a second surface for contact with lower dentition of the patient, simultaneously.

20. The device of claim 19, wherein the first and second surfaces are contoured to cooperate with the dentition of a predetermined patient.

21. The device of any one of claims 1 to 20, wherein the dental member and the convertor are selectively coupled together to correspond to the dentition of a predetermined patient.

22. The device of any one of claims 1 to 21, wherein the dental member and the convertor are removably coupled together.

23. The device of any one of claims 1 to 22, wherein the device further comprises a support upon which the dental member is supported.

24. The device of any one of claims 1 to 23, wherein the energy source is an electric toothbrush.

25. An orthodontic device for use with an electronic toothbrush, the device comprising:

a dental member adapted to contact dentition and to vibrate while contacting the dentition for accelerating bone growth; and

a convertor that is adapted to convert energy from an energy source into vibrating motion of the dental member,

wherein the convertor is adapted to be removably coupled to the electronic toothbrush, with the toothbrush providing the energy source for operating the device.

26. An orthodontic kit, the kit comprising:

a device according to any one of claims 1 to 24; and

a secondary dental member.

27. The kit of claim 26, wherein the secondary dental member comprises a mouthpiece of unequal size to a mouthpiece of the dental member of the device.

28. The kit of claim 26 or claim 27, wherein the energy source of the device is an electronic toothbrush.

29. An orthodontic device, the device comprising:

a dental member adapted to contact dentition and to vibrate while contacting the dentition for accelerating bone growth;

an energy source to provide energy for operating the device; and

a convertor that is adapted to convert energy from the energy source into vibratory motion of the dental member.

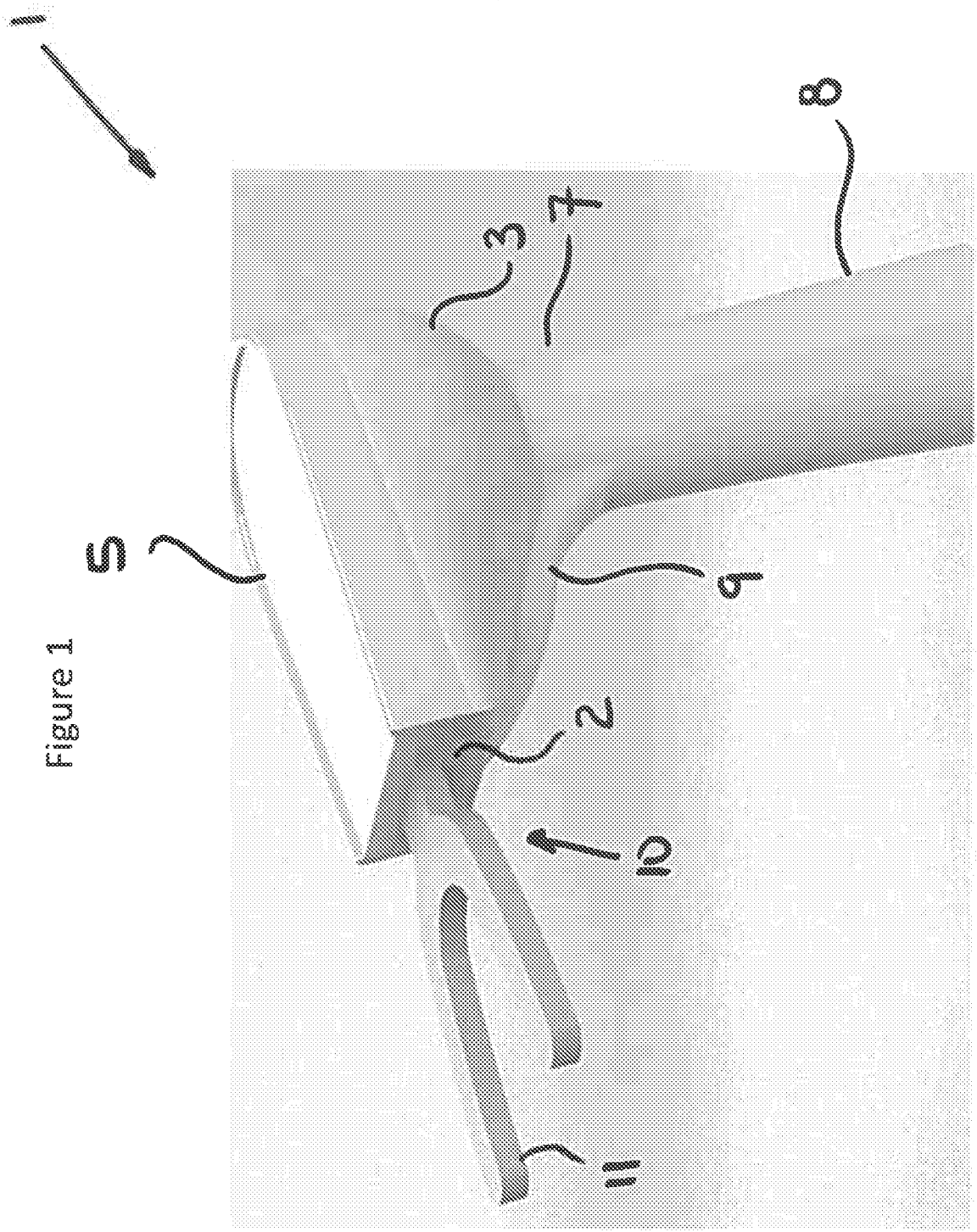

Figure 1

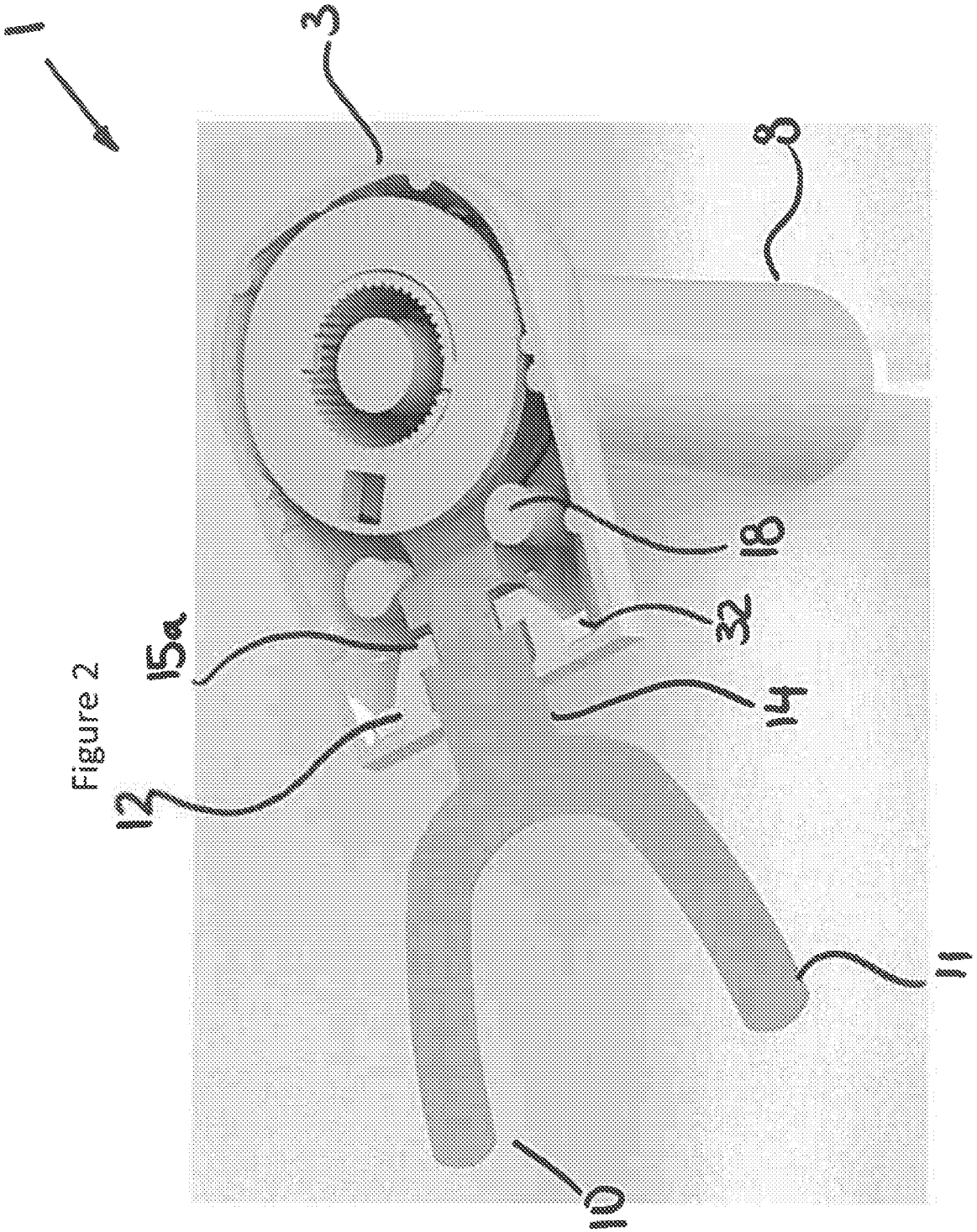

Figure 2

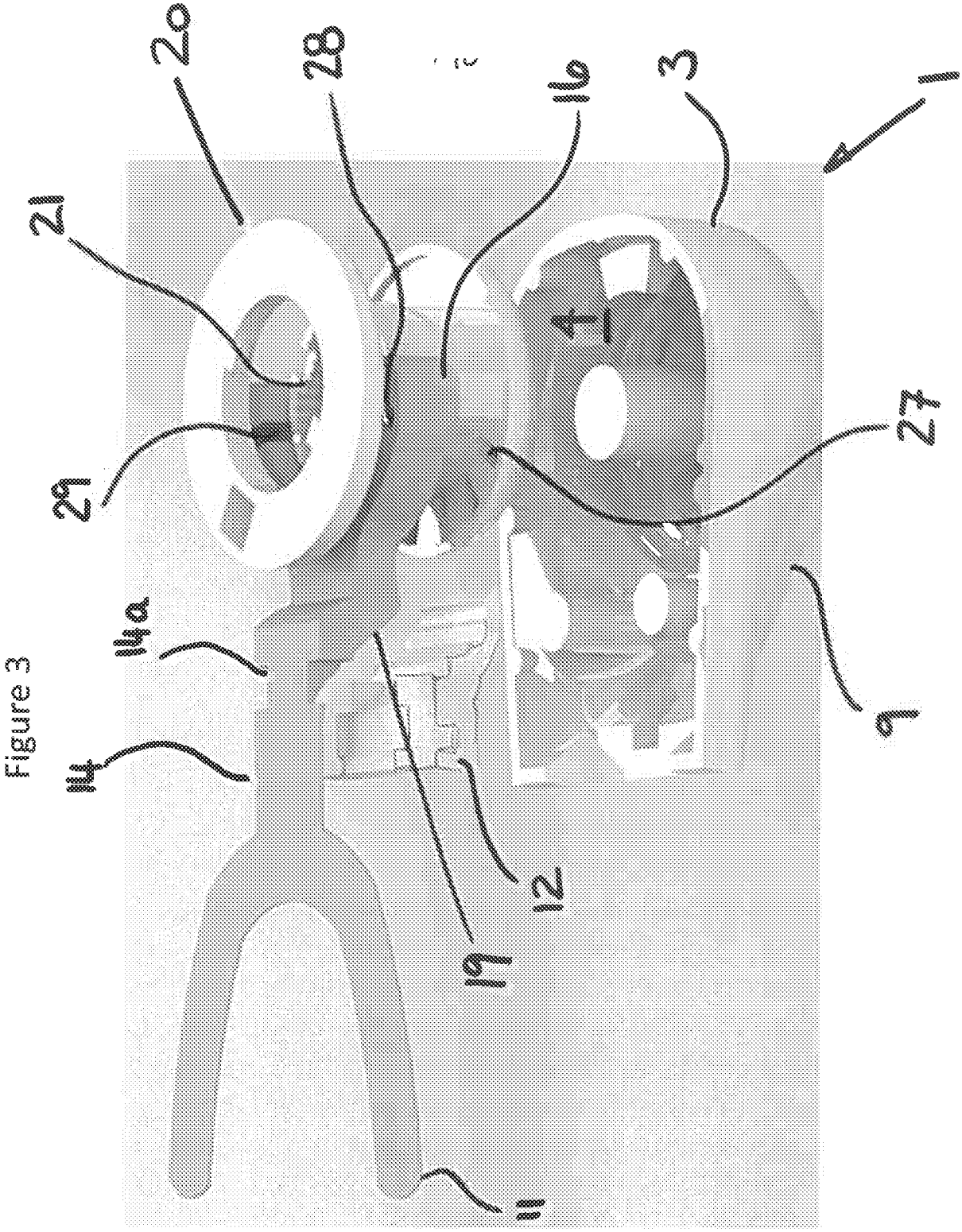

Figure 3

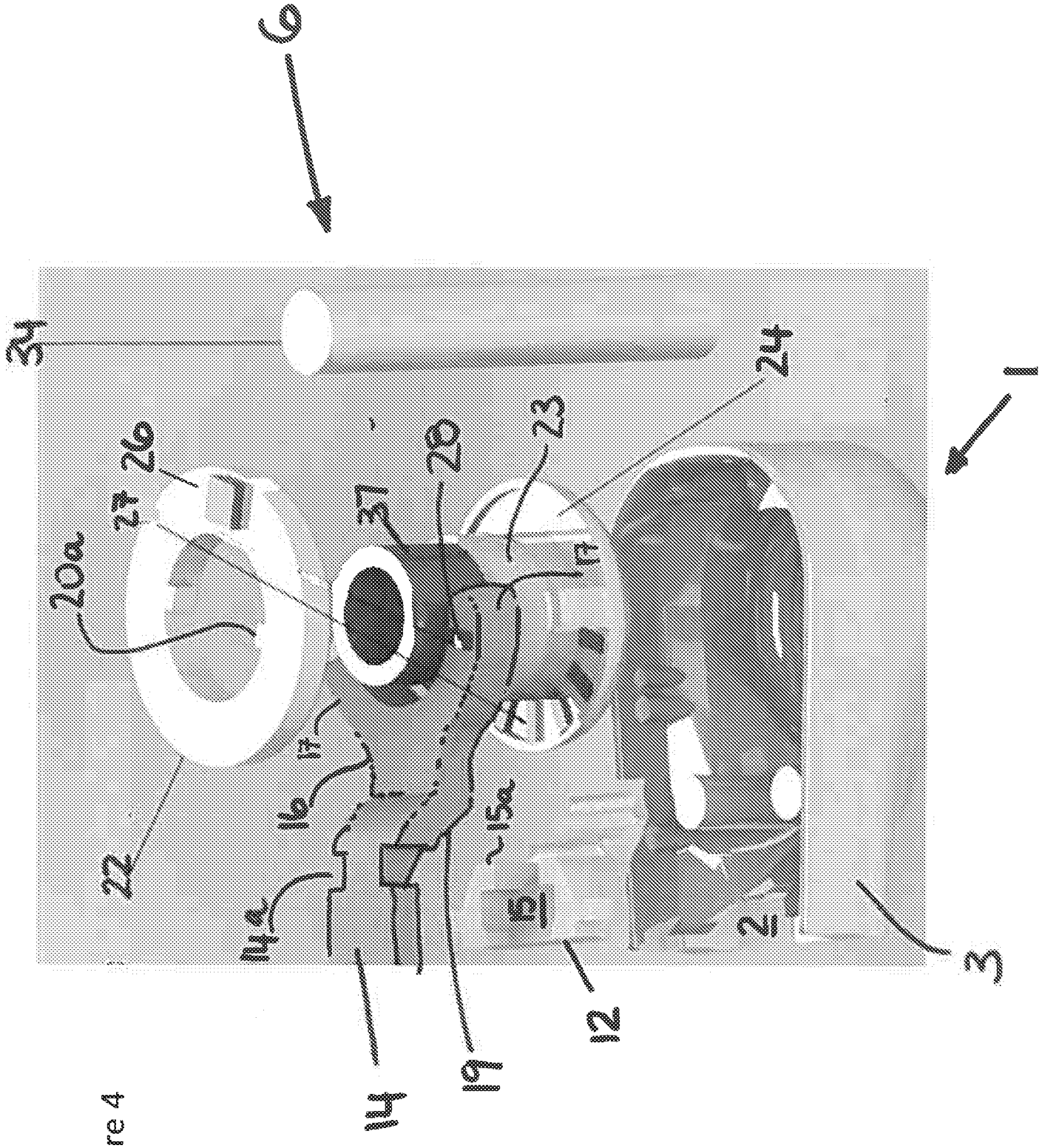

Figure 4

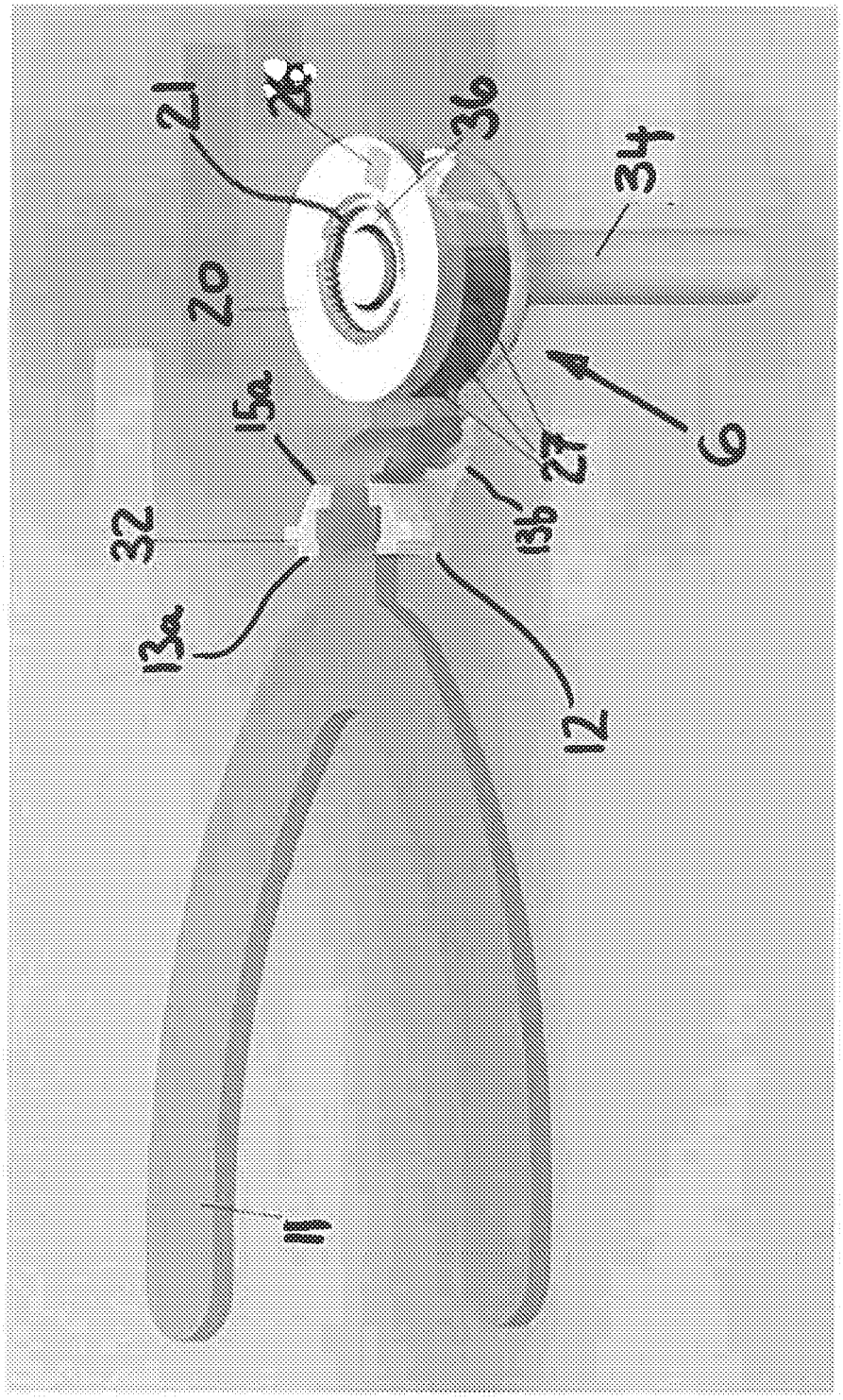

Figure 5

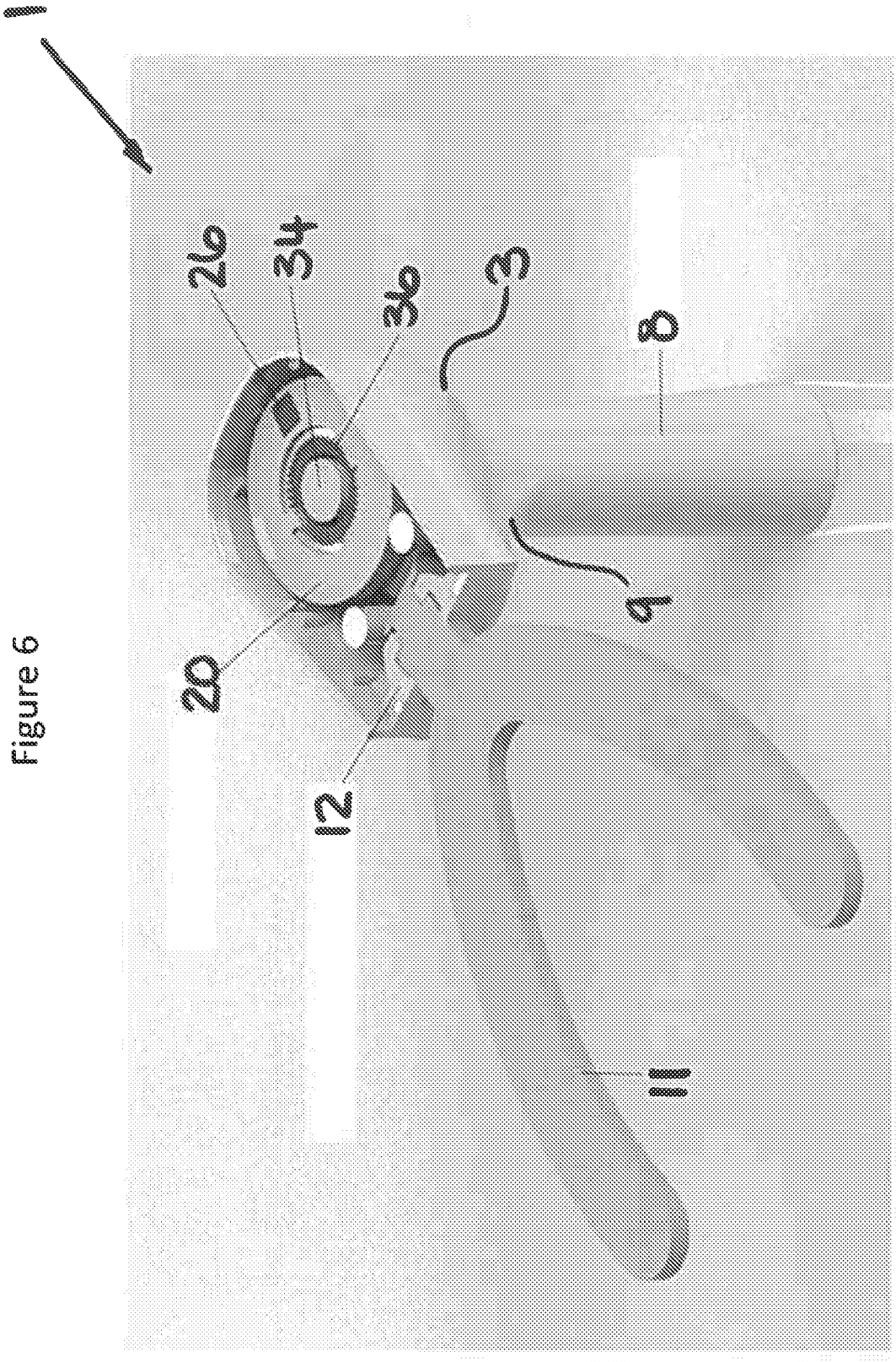

Figure 6

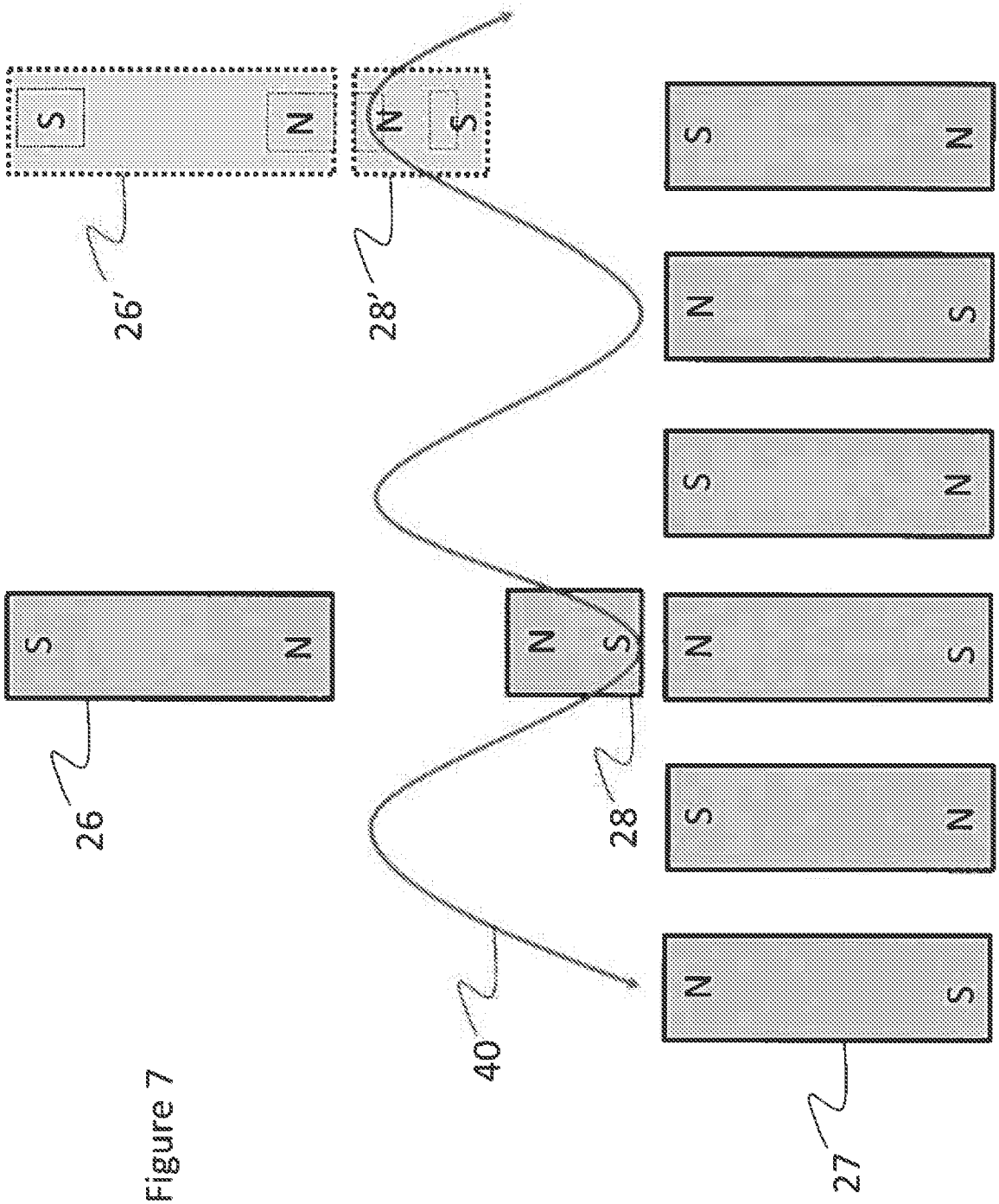

Figure 7

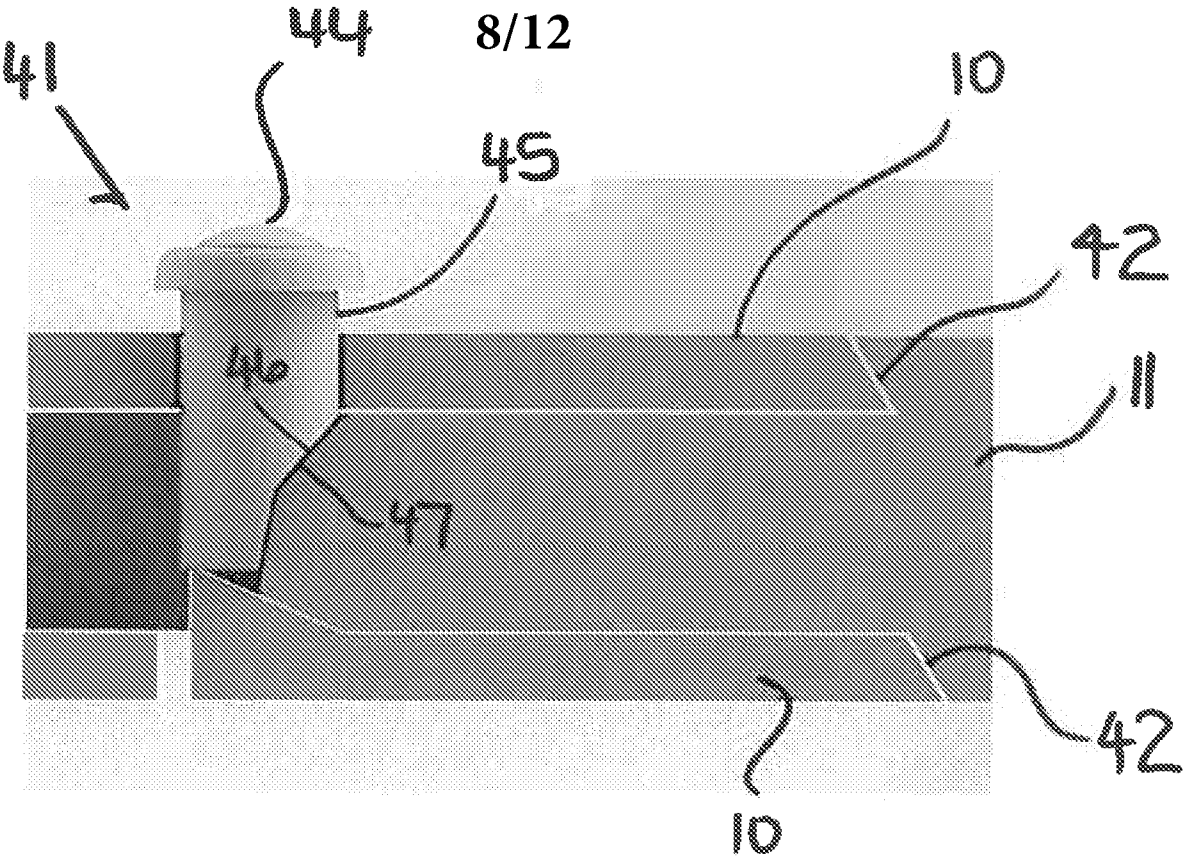

Figure 8

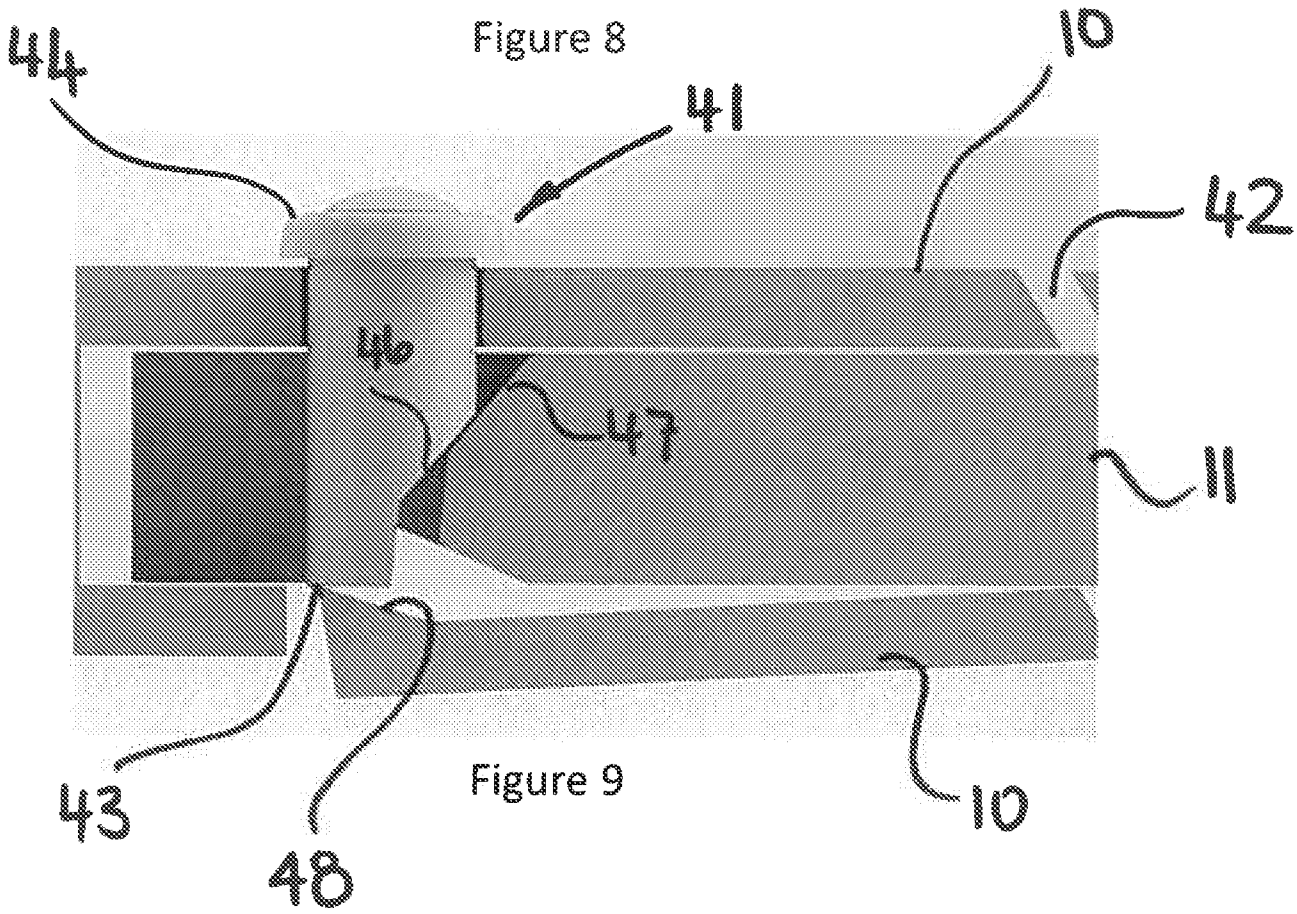

Figure 9

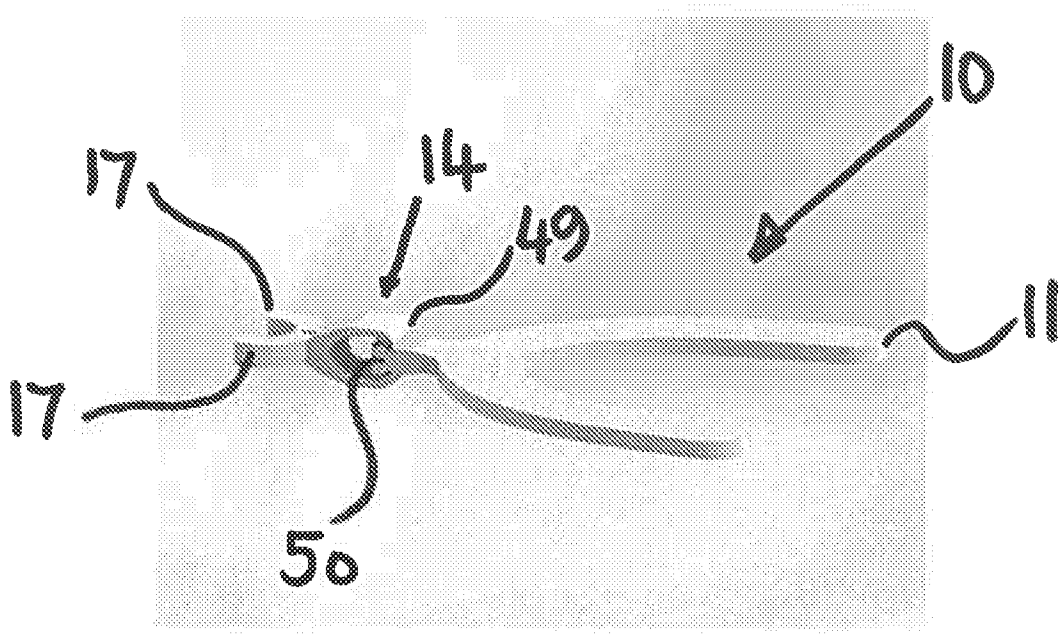

Figure 10

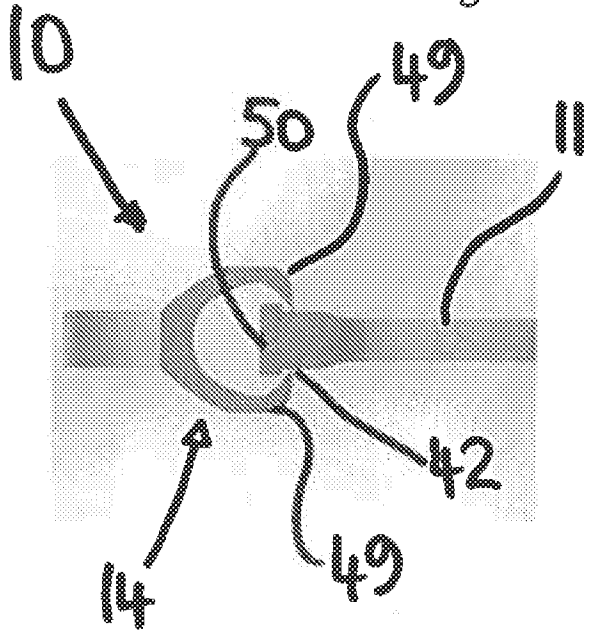

Figure 12

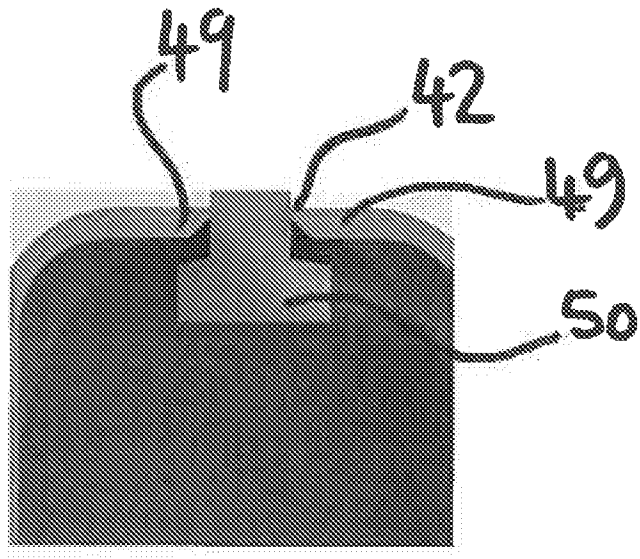

Figure 11

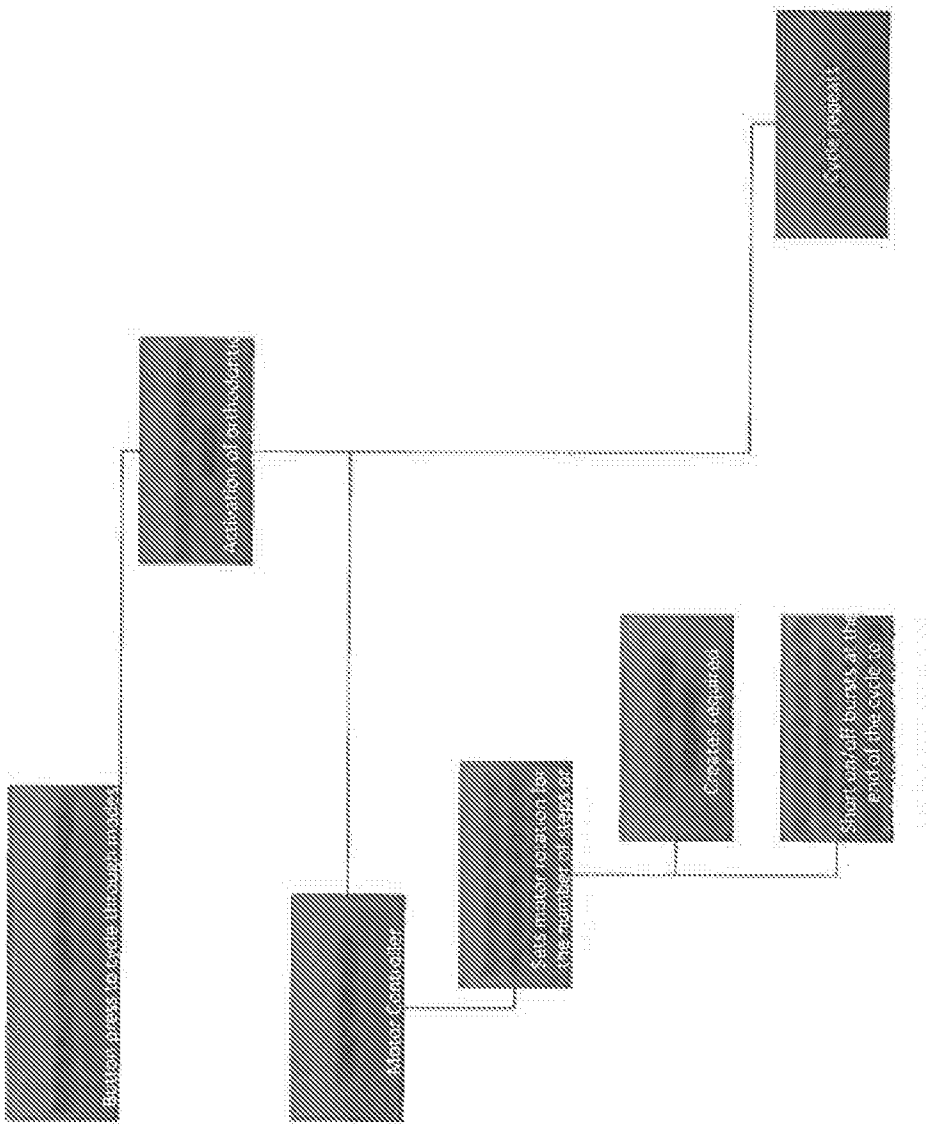

Figure 13

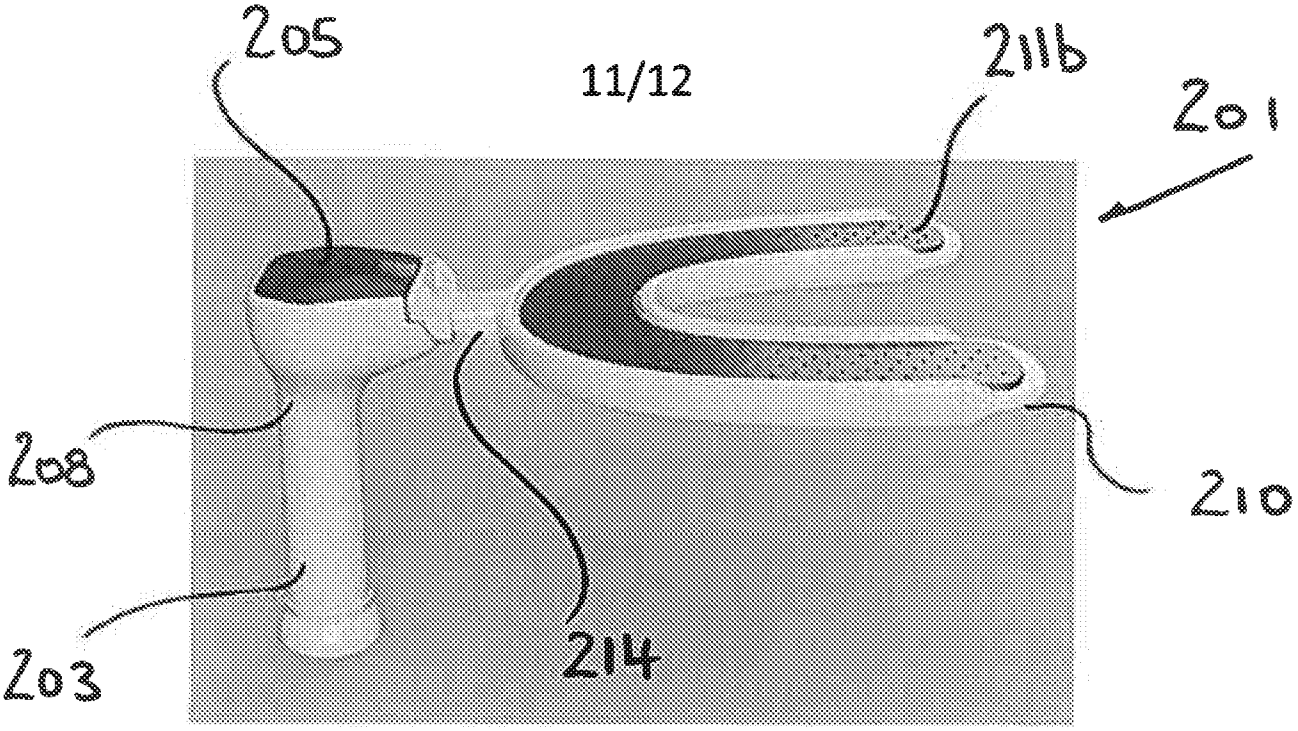

Figure 14

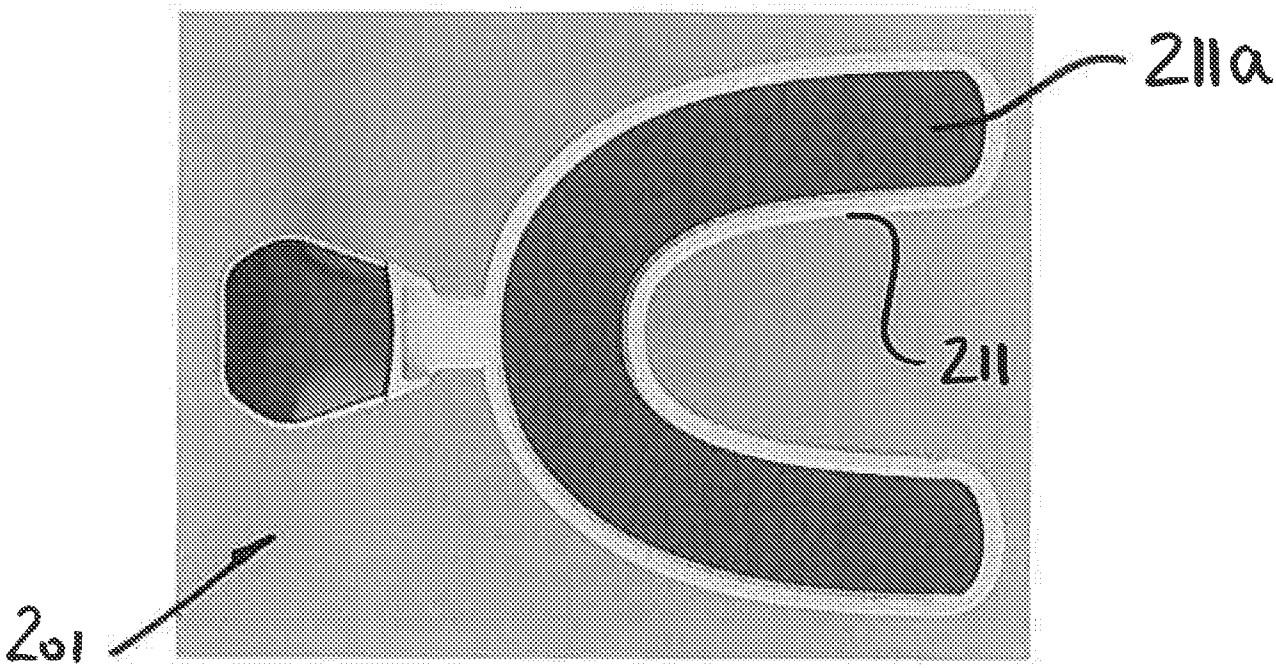

Figure 15

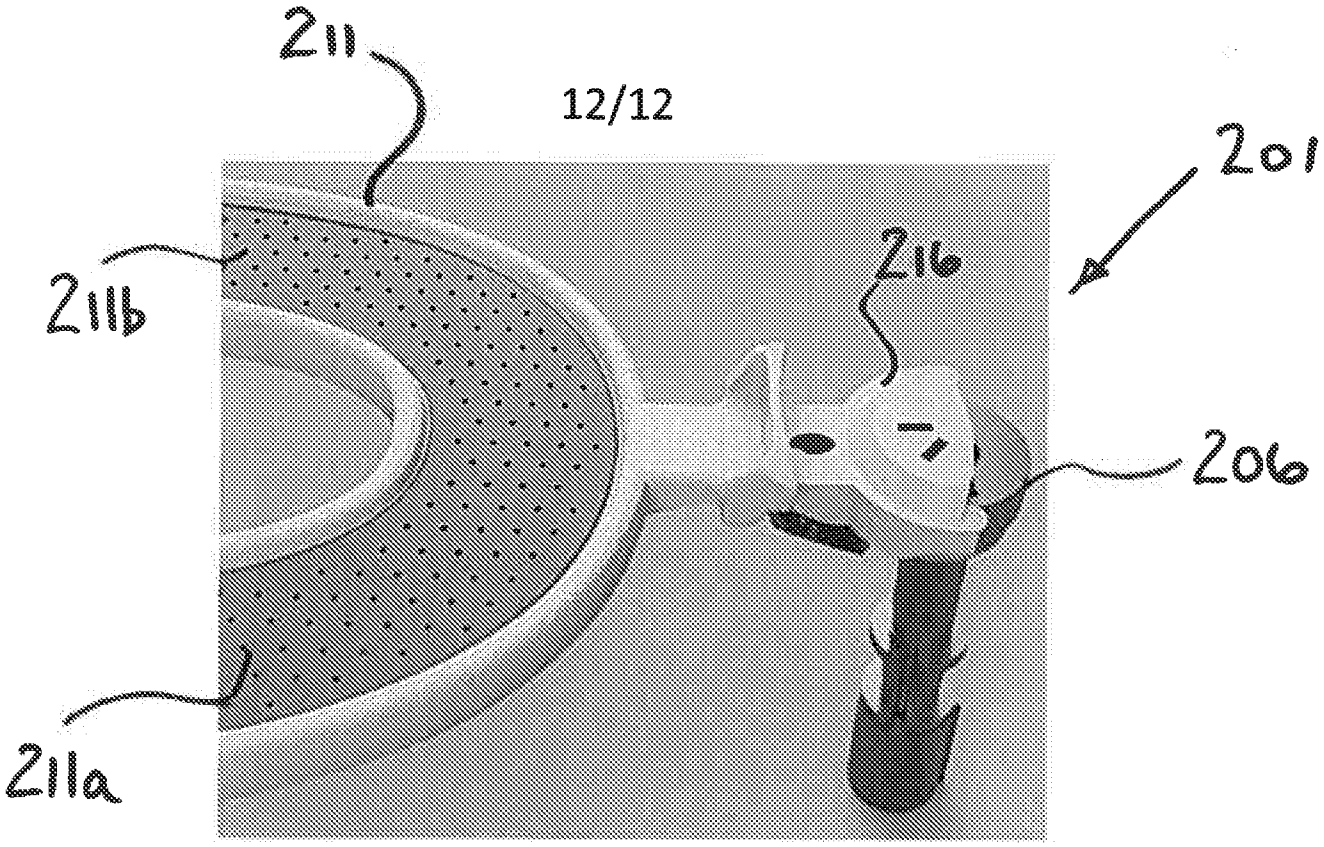

Figure 16

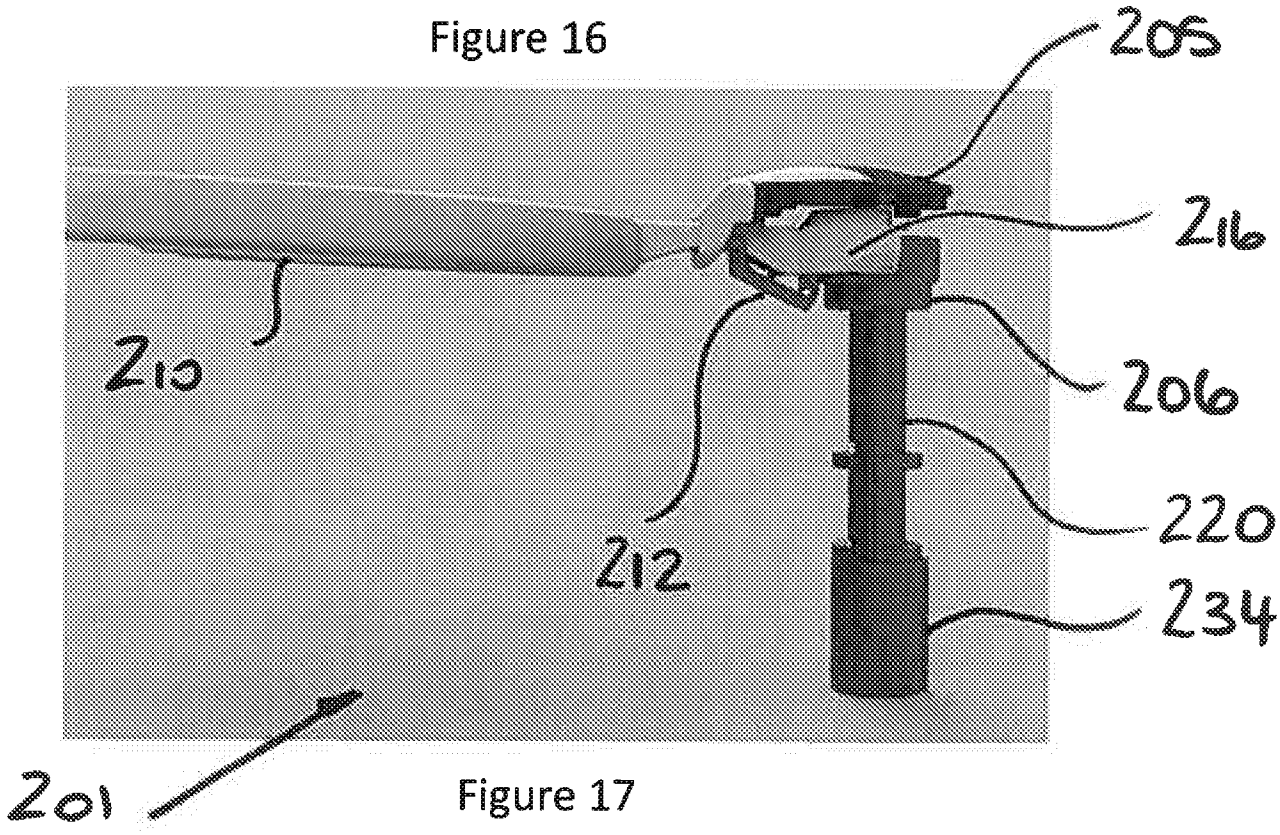

Figure 17

INTERNATIONAL SEARCH REPORT

International application No.
PCT/AU2016/050244

A. CLASSIFICATION OF SUBJECT MATTER

A61C 7/00 (2006.01) A61C 7/08 (2006.01) A61C 19/06 (2006.01) A61C 17/34 (2006.01)

According to International Patent Classification (IPC) or to both national classification and IPC

B. FIELDS SEARCHED

Minimum documentation searched (classification system followed by classification symbols)

Documentation searched other than minimum documentation to the extent that such documents are included in the fields searched

Electronic data base consulted during the international search (name of data base and, where practicable, search terms used)

EPODOC: A61H 23/0245/CC, A61H 23/0254/CC, A61H 23/0263/CC, A61C 17/20/CC, A61C 17/26/CC, A61C 17/34/CC; **TXTE:** Keywords: (teeth, tooth, dentition, dental, orthodont+, promot+, enhanc+, improv+, accelerat+, speed+,, bone, osteo+, growth, osteogenes+, (bone 2w (turn_over, remodel+)), vibrat+, sonic+, ultrasonic+, piezo+, convertor, converter, transformer, adapt+, change, convert+) and similar words; **WPIAP**: IC A61C 17/20?, A61C 17/34?, A61C 19/06, A61C 7/00? & Keywords (teeth, tooth, dentition, dental, orthodont+, promot+, enhanc+, improv+, accelerat+, speed+, osteogenes+, (bone 2w (turn_over, remodel+, growth)), vibrat+, sonic+, ultrasonic+, piezo+, convertor, converter, transformer, adapt+, change, convert+) and similar words; **Espacenet & Google Scholar:** Keywords:(teeth, tooth, dentition, dental, orthodont+) and (promot+, enhanc+, improv+, accelerat+, speed+) and (bone, osteo+) and (growth, osteogenes+, turn_over, remodel+) and (vibrat+, sonic+, ultrasonic+, piezo+) and (convertor, converter, transformer, adapt+, change, convert+) and similar words; **Espacent:** Inventor search: LO, Thomas; HALL, Michael and Applicant search: KIEL CORPORATION; **WPIAP:** Inventor: LO, HALL

C. DOCUMENTS CONSIDERED TO BE RELEVANT

Category*	Citation of document, with indication, where appropriate, of the relevant passages	Relevant to claim No.
	Documents are listed in the continuation of Box C	

[X] Further documents are listed in the continuation of Box C

[X] See patent family annex

* Special categories of cited documents:

"A" document defining the general state of the art which is not considered to be of particular relevance

"E" earlier application or patent but published on or after the international filing date

"L" document which may throw doubts on priority claim(s) or which is cited to establish the publication date of another citation or other special reason (as specified)

"O" document referring to an oral disclosure, use, exhibition or other means

"P" document published prior to the international filing date but later than the priority date claimed

"T" later document published after the international filing date or priority date and not in conflict with the application but cited to understand the principle or theory underlying the invention

"X" document of particular relevance; the claimed invention cannot be considered novel or cannot be considered to involve an inventive step when the document is taken alone

"Y" document of particular relevance; the claimed invention cannot be considered to involve an inventive step when the document is combined with one or more other such documents, such combination being obvious to a person skilled in the art

"&" document member of the same patent family

Date of the actual completion of the international search	Date of mailing of the international search report
20 June 2016	20 June 2016
Name and mailing address of the ISA/AU	**Authorised officer**
AUSTRALIAN PATENT OFFICE PO BOX 200, WODEN ACT 2606, AUSTRALIA Email address: pct@ipaustralia.gov.au	Karen Violante AUSTRALIAN PATENT OFFICE (ISO 9001 Quality Certified Service) Telephone No. 0262837933

INTERNATIONAL SEARCH REPORT C (Continuation). DOCUMENTS CONSIDERED TO BE RELEVANT		International application No. **PCT/AU2016/050244**
Category*	Citation of document, with indication, where appropriate, of the relevant passages	Relevant to claim No.
	WO 2013/142032 A1 (INDIANA UNIVERSITY RESEARCH & TECHNOLOGY CORPORATION) 26 September 2013	
X	Abstract; Figures, especially 1A and 1B; Paragraphs [0027]-[0046] and [0049]	1, 21-23, 26 and 29
Y	Abstract; Figures, especially 1A and 1B; Paragraphs [0027]-[0046] and [0049]	2-20, 24-25 and 27-28
	US 2010/0055634 A1 (SPAULDING et al.) 04 April 2010	
X	Abstract; Figures; Paragraphs [0014], [0017], [0025]-[0027], [0035]-[0039] and [0049]	1, 21-23, 26-27 and 29
Y	Abstract; Figures; Paragraphs [0014], [0017], [0025]-[0027], [0035]-[0039] and [0049]	2-20, 24-25 and 28
	WO 2014/047004 A1 (ORTHOACCEL TECHNOLOGIES, INC.) 27 March 2014	
X	Abstract; Figures; Paragraphs [0027]-[0030], [0032]-[0039], [0043]-[0053] and [0072]-[0099]	1, 21-23, 26-27 and 29
Y	Abstract; Figures; Paragraphs [0027]-[0030], [0032]-[0039], [0043]-[0053] and [0072]-[0099]	5, 8-11, 13-14, 19-20, 24-25 and 28
	US 2013/0273490 A1 (WAY et al.) 17 October 2013	
X	Abstract; Figures; Paragraphs [0004]-[0012], [0044]-[0049] and [0069]-[0076]	1-29
	EP 2792330 A1 (PANASONIC HEALTHCARE CO., LTD.) 22 October 2014	
X	Abstract; Figures, especially figures 1A to 4; Paragraphs [0014]-[0015], [0017]-[0029], [0074]-[0086], [0094]-[0099] and [0126]-[0127]	1-6, 12, 14-18, 21-23, 26 and 29
Y	Abstract; Figures, especially figures 1A to 4; Paragraphs [0014]-[0015], [0017]-[0029], [0074]-[0086], [0094]-[0099] and [0126]-[0127]	7-11, 13, 19-20, 24-25 and 27-28
	WO 2010/030630 A1 (NEW YORK UNIVERSITY) 18 March 2010	
X	Abstract; Figures in particular figure 6G; Paragraphs [0009]-[0014] and [0028]-[0089]	1-29
	WO 2007/121760 A1 (REMEDENT NV) 01 November 2007	
Y	Abstract; Figures; Page 4, lines 18-19; Page 30, lines 15-20	2-20, 24-25 and 27-28
	CN 204133620 U (YOU XINYUE) 04 February 2015	
X	Abstract; Figures	1-3 and 21, 23 and 29
	US 2008/0233541 A1 (DE VREESE et al.) 25 September 2008	
X	Abstract; Figures; Paragraphs [0047]-[0048], [0062]-[0066], [0072]-[0073], [0094]-[0097], [0115]-[0117], [0166]-[0185], [0211] and [0221]-[0226]	1-29

INTERNATIONAL SEARCH REPORT Information on patent family members	International application No. **PCT/AU2016/050244**

This Annex lists known patent family members relating to the patent documents cited in the above-mentioned international search report. The Australian Patent Office is in no way liable for these particulars which are merely given for the purpose of information.

Patent Document/s Cited in Search Report		Patent Family Member/s	
Publication Number	**Publication Date**	**Publication Number**	**Publication Date**
WO 2013/142032 A1	26 September 2013	WO 2013142032 A1	26 Sep 2013
		US 2015297319 A1	22 Oct 2015
US 2010/0055634 A1	04 April 2010	US 2010055634 A1	04 Mar 2010
		US 9028250 B2	12 May 2015
		AU 2013299403 A1	05 Feb 2015
		CN 102596091 A	18 Jul 2012
		CN 104718273 A	17 Jun 2015
		EP 2498715 A1	19 Sep 2012
		EP 2882824 A1	17 Jun 2015
		KR 20120099666 A	11 Sep 2012
		US 2013059263 A1	07 Mar 2013
		US 8500446 B2	06 Aug 2013
		US 2013323669 A1	05 Dec 2013
		US 8939762 B2	27 Jan 2015
		US 2014050681 A1	20 Feb 2014
		US 9125829 B2	08 Sep 2015
		US 2014044654 A1	13 Feb 2014
		US 9145383 B2	29 Sep 2015
		US 2008227046 A1	18 Sep 2008
		US 2008227047 A1	18 Sep 2008
		US 2012322018 A1	20 Dec 2012
		US 2014272761 A1	18 Sep 2014
		US 2015079533 A1	19 Mar 2015
		US 2015147711 A1	28 May 2015
		US 2015164852 A1	18 Jun 2015
		US 2015173856 A1	25 Jun 2015
		US 2015173857 A1	25 Jun 2015
		US 2016002200 A1	07 Jan 2016
		US 2016022555 A1	28 Jan 2016
		US 2016024046 A1	28 Jan 2016
		WO 2011056260 A1	12 May 2011
		WO 2014025370 A1	13 Feb 2014
		WO 2014026151 A1	13 Feb 2014
WO 2014/047004 A1	27 March 2014	WO 2014047004 A1	27 Mar 2014
		CA 2882942 A1	27 Mar 2014

Due to data integration issues this family listing may not include 10 digit Australian applications filed since May 2001.

INTERNATIONAL SEARCH REPORT Information on patent family members	International application No. **PCT/AU2016/050244**

This Annex lists known patent family members relating to the patent documents cited in the above-mentioned international search report. The Australian Patent Office is in no way liable for these particulars which are merely given for the purpose of information.

Patent Document/s Cited in Search Report		Patent Family Member/s	
Publication Number	**Publication Date**	**Publication Number**	**Publication Date**
		US 2015182305 A1	02 Jul 2015

Due to data integration issues this family listing may not include 10 digit Australian applications filed since May 2001.

INTERNATIONAL SEARCH REPORT Information on patent family members	International application No. **PCT/AU2016/050244**

This Annex lists known patent family members relating to the patent documents cited in the above-mentioned international search report. The Australian Patent Office is in no way liable for these particulars which are merely given for the purpose of information.

Patent Document/s Cited in Search Report		Patent Family Member/s	
Publication Number	**Publication Date**	**Publication Number**	**Publication Date**
US 2013/0273490 A1	17 October 2013	US 2013273490 A1	17 Oct 2013
		AU 2013246421 A1	30 Oct 2014
		CA 2869934 A1	17 Oct 2013
		EP 2841006 A1	04 Mar 2015
		JP 2015518397 A	02 Jul 2015
		WO 2013154737 A1	17 Oct 2013
EP 2792330 A1	22 October 2014	EP 2792330 A1	22 Oct 2014
		CN 104039261 A	10 Sep 2014
		JP 2013123626 A	24 Jun 2013
		JP 2014012047 A	23 Jan 2014
		KR 20140105829 A	02 Sep 2014
		US 2014335467 A1	13 Nov 2014
		WO 2013088742 A1	20 Jun 2013
WO 2010/030630 A1	18 March 2010	WO 2010030630 A1	18 Mar 2010
		AU 2009291915 A1	18 Mar 2010
		AU 2009291915 B2	12 Mar 2015
		CN 102170837 A	31 Aug 2011
		CN 102170837 B	25 Jun 2014
		CN 104274251 A	14 Jan 2015
		EP 2339983 A1	06 Jul 2011
		EP 2339983 B1	26 Nov 2014
		HK 1152856 A1	02 Oct 2015
		JP 2012501760 A	26 Jan 2012
		JP 5753086 B2	22 Jul 2015
		US 2010092916 A1	15 Apr 2010
WO 2007/121760 A1	01 November 2007	WO 2007121760 A1	01 Nov 2007
CN 204133620 U	04 February 2015		
US 2008/0233541 A1	25 September 2008	US 2008233541 A1	25 Sep 2008
		AU 2005239796 A1	17 Nov 2005
		EP 1744700 A1	24 Jan 2007
		WO 2005107636 A1	17 Nov 2005
		WO 2005107637 A1	17 Nov 2005
		WO 2005107638 A1	17 Nov 2005

Due to data integration issues this family listing may not include 10 digit Australian applications filed since May 2001.

INTERNATIONAL SEARCH REPORT Information on patent family members	International application No. **PCT/AU2016/050244**

This Annex lists known patent family members relating to the patent documents cited in the above-mentioned international search report. The Australian Patent Office is in no way liable for these particulars which are merely given for the purpose of information.

Patent Document/s Cited in Search Report		Patent Family Member/s	
Publication Number	**Publication Date**	**Publication Number**	**Publication Date**

End of Annex

Due to data integration issues this family listing may not include 10 digit Australian applications filed since May 2001.