H. M. DUDLEY.

FABRIC STEAMING DEVICE.

APPLICATION FILED APR. 25, 1917.

1,317,275.

Patented Sept. 30, 1919.

2 SHEETS—SHEET 1.

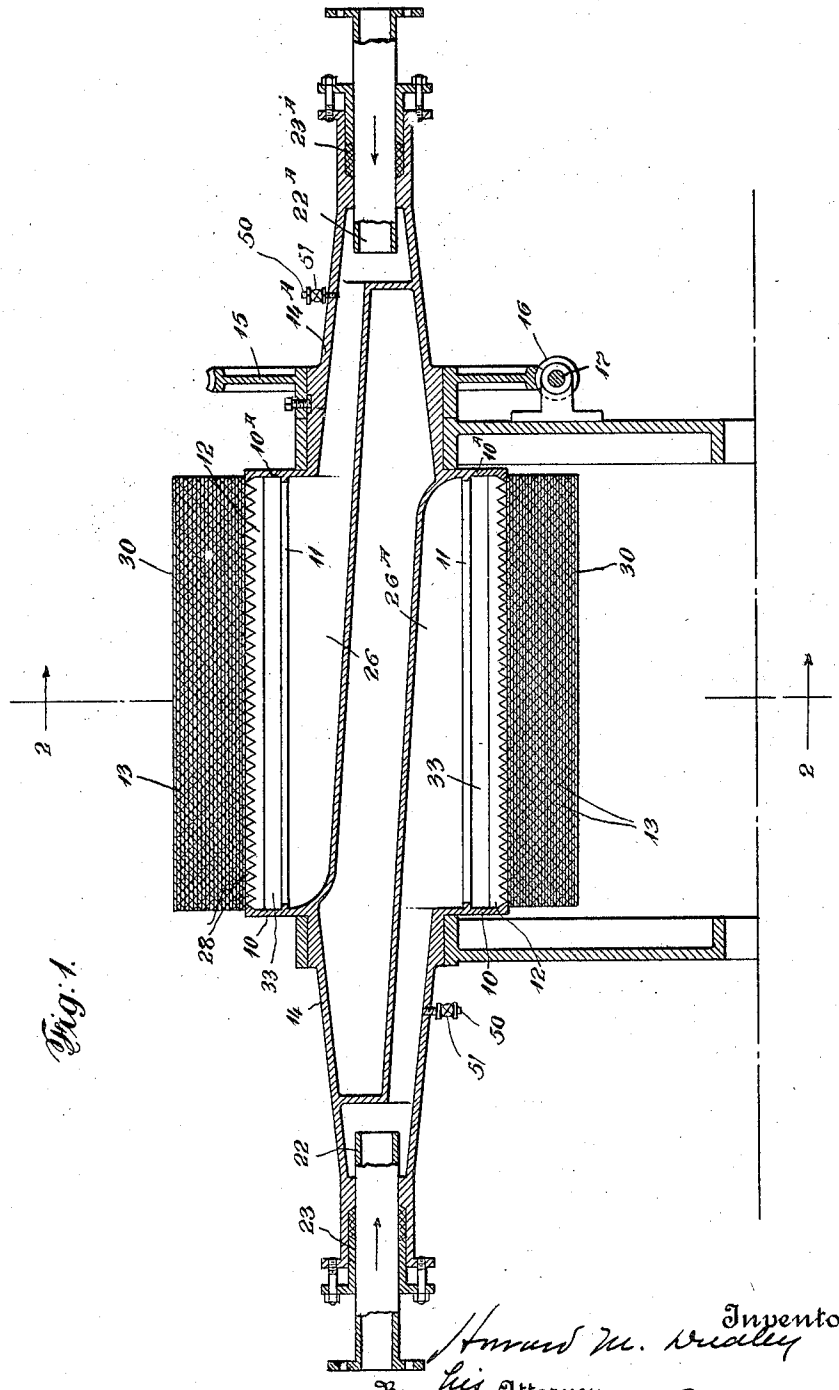

Fig. 1.

Inventor
Howard M. Dudley

By his Attorney
Howard Freeman

THE COLUMBIA PLANOGRAPH CO., WASHINGTON, D. C.

H. M. DUDLEY.

FABRIC STEAMING DEVICE.

APPLICATION FILED APR. 25, 1917.

1,317,275.

Patented Sept. 30, 1919.

2 SHEETS—SHEET 2.

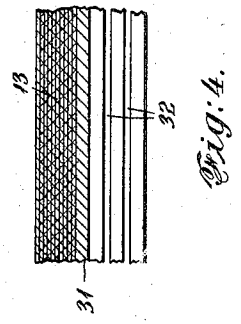

Fig. 4.

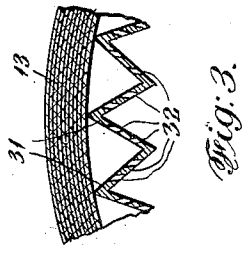

Fig. 3.

Fig. 2.

Inventor

Howard M. Dudley

By his Attorney

Howard Pearsall

THE COLUMBIA PLANOGRAPH CO., WASHINGTON, D. C.

UNITED STATES PATENT OFFICE.

HOWARD M. DUDLEY, OF PHILADELPHIA, PENNSYLVANIA.

FABRIC-STEAMING DEVICE.

1,317,275. Specification of Letters Patent. **Patented Sept. 30, 1919.**

Application filed April 25, 1917. Serial No. 164,322.

To all whom it may concern:

Be it known that I, HOWARD M. DUDLEY, a citizen of the United States, and a resident of Philadelphia, in the county of Philadelphia and State of Pennsylvania, have invented certain new and useful Improvements in Fabric-Steaming Devices, of which the following is a specification.

My invention relates to fabric-steaming machines and refers particularly to a machine of this character suitable for steaming textile fabrics while under tension.

The object of my invention is a device whereby even steaming effects may be obtained upon textile fabrics, thus overcoming the inequalities otherwise incident during the further operations to which the fabric is subjected.

One of the important operations to which certain classes of textile fabrics are subjected after crabbing is that of steaming. This consists in submitting the fabric in a stretched condition to the action of steam under pressure. The usually employed method is to stretch the fabric over a hollow cylinder or reel having cylindrical openings through which the steam passes into the fabric. The greatest care must be exercised in order that all portions of the fabric be equally treated as otherwise inequalities will become evident in the further dyeing and finishing operations.

I have found that this danger may be overcome by having certain shaped openings, not heretofore used for this purpose, in the hollow reel, and further by introducing the steam simultaneously from both ends of the reel and impinging it equally and evenly through the said openings.

In order to accomplish this I have invented a certain form of steaming machine, several modifications of which are shown in the accompanying drawings, forming a part of this application and in which similar parts are designated by similar numerals.

Figure 1 is a cross-section through the line 1—1 of Fig. 2.

Fig. 2 is a cross-section through the line 2—2 of Fig. 1.

Fig. 3 is a cross-section of a modification of a foraminous plate.

Fig. 4 is a side plan view of Fig. 3.

In the particular form of the device of my invention, shown in the accompanying drawings, a reel, around which the cloth 13 to be treated is wound, comprises the two annular end flanges 10, 10^A, to which are fixedly attached the annular foraminous plates 11, 12. The two end flanges 10, 10^A extend outwardly into the shells 14, 14^A of the hollow core of the reel. Fixedly attached to the shell 14^A is a cogged wheel 15, meshing with the worm gear 16, which is fixedly attached to the shaft 17, which in turn in fixedly attached to the two gear wheels 18, 19. The gear wheel 20 is attached to the shaft 21, connected to a source of power, from which revolution is given the gear wheel 20. By shifting the wheel 20, by any suitable means, the wheel 15 and the reel may be revolved in either direction or be retained at rest.

Extending respectively into the shells 14 and 14^A are the steam pipes 22, 22^A, around which the shells 14, 14^A revolve, a tight joint being maintained by means of the bushings 23, 23^A.

The foraminous plate 11 has a series of parallel elongated slits or openings 24, 24 extending longitudinally of the plate, and the inner face of the plate 11 is connected by a series of tubes 25, 25^A, 26, 26^A to the exterior portion of the chambers formed by the shells 14, 14^A, the tubes from the chamber of the shell 14 alternating upon the foraminous plate 11 with the tubes from the chamber of the shell 14^A, *i. e*, adjacent tubes opening upon the plate 11 extend oppositely to each other and outwardly through the shells 14, 14^A.

The foraminous plate 12 has a longitudinal series of upwardly extended saw teeth 28, 28, with longitudinal openings 29, 29 between them. A cloth cover 30 is wound tightly around the cloth 13.

While water of condensation will have a tendency to pass through the series of tubes 25, 25^A, 26, 26^A, and thus outwardly of the device, in order to facilitate the removal of such water, each tube 25, 25^A, 26, 26^A carries a pipe 50 having a valve 51.

In the modification shown in Figs. 3 and 4, the foraminous plate 12 consists of a series of parallel upwardly extented pyramidal bars 31, 31, the inclined sides of which have a series of slits or openings 32, 32 through which the steam may be passed.

The operation of the device is as follows: The cloth 13 is wound tightly upon the foraminous plate 12 of the reel and the cloth cover 30 wound tightly around the cloth 13. The reel is then revolved and steam allowed

to enter under proper pressure through the pipes 22, 22A. The steam thus passes through the tubes 25, 25A, 26, 26A through the slits 24, 24 of the plate 11 into the chamber 33, and from thence through the openings 29, 29 of the plate 12 and through the cloth 13. The upwardly extended saw teeth or pyramidal members of the foraminous plate 12 supports the cloth 13 in a condition where it is completely subjected to the action of the steam, and the tubes supplying the steam are so arranged that it is submitted in uniform and complete condition to the fabric, thus insuring uniform treatment.

I do not limit myself to the particular size, form, number or arrangement of parts illustrated and described, all of which may be varied without going beyond the scope of my invention as described and claimed.

What is claimed, is:

1. In a device of the character specified, in combination, a revoluble foraminous cylinder having a series of parallel bars with upwardly extended pointed members, openings between the bars, means for passing steam through said openings, and means for revolving the device.

2. In a device of the character specified, in combination, a revoluble foraminous cylinder having a series of parallel bars with upwardly extended pointed members, openings between the bars, a steam space between the bars and a foraminous cylindrical plate, and means for passing steam through the foraminous plate, the steam space and the foraminous cylinder, and means for revolving the device.

3. In a device of the character specified, in combination, an outer foraminous cylindrical member, an inner foraminous cylindrical member spaced from the outer member, a series of tubes connecting the entire inner face of the inner foraminous member with alternate sources of steam, means for passing steam through the tubes and the two foraminous members, and means for revolving the device while steam is being passed through it.

4. In a device of the character specified, in combination, an outer foraminous cylindrical member having a series of parallel saw-toothed bars, spaces between the bars, an inner foraminous cylindrical member spaced from the outer member, a series of tubes connecting the entire inner face of the inner foraminous member with alternate sources of steam supply, and means for revolving the device while steam is being passed through it.

5. In a device of the character specified, in combination, a hollow reel, the cylindrical portion of which has outwardly extended members, openings in the reel and between the extended members, an inner foraminous cylindrical member spaced from the outer wall of the reel integral with the reel and having parallel separated bars, openings between the bars, adjacent tubes upon the entire inner face of the inner foraminous member extending in opposite directions through the reel to a source of steam supply, means for revolving the reel while steam is passing therethrough.

Signed at New York city, in the county of New York and State of New York, this 16″ day of April, 1917.

HOWARD M. DUDLEY.

Copies of this patent may be obtained for five cents each, by addressing the "Commissioner of Patents, Washington, D. C."