Aug. 26, 1941. W. B. BECHMAN 2,253,996

EXERCISING DEVICE

Filed Jan. 21, 1941

Fig. 1.

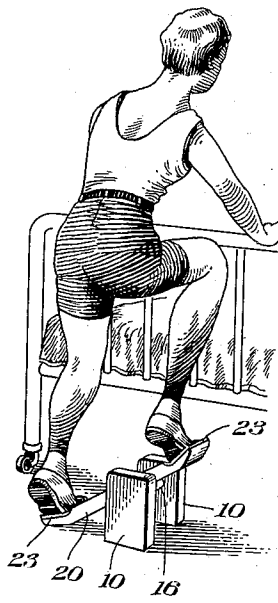

Fig. 4.

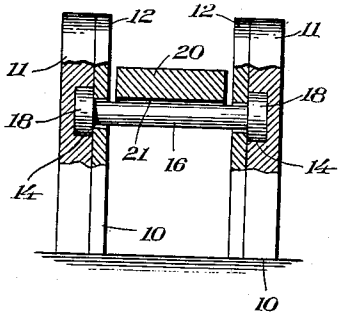

Fig. 8.

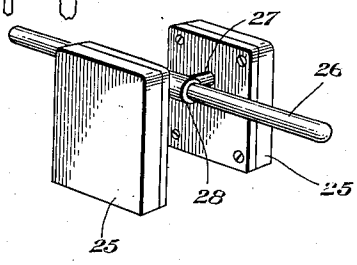

Fig. 2.

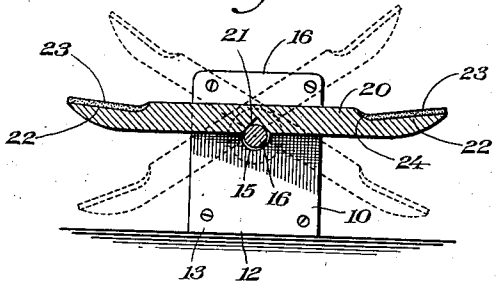

Fig. 3.

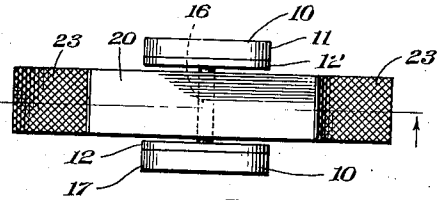

Fig. 6.

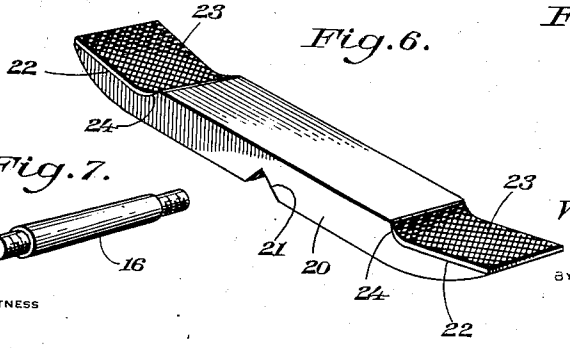

Fig. 7.

Fig. 5.

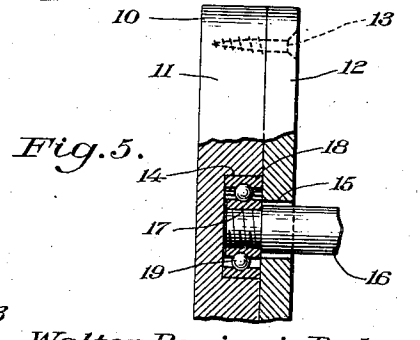

Walter Benjamin Bechman
INVENTOR

BY Victor J. Evans & Co.
ATTORNEYS

WITNESS

Patented Aug. 26, 1941 2,253,996

UNITED STATES PATENT OFFICE

2,253,996

EXERCISING DEVICE

Walter B. Bechman, Montgomery, Ala.

Application January 21, 1941, Serial No. 375,330

1 Claim. (Cl. 272—57)

This invention relates to exercising devices and has for an object to provide a device including a balance board upon the ends of which the operator's feet rest to impart a seesawing motion to the board to simulate a bicycle rider going up grade and exercising the body by natural body resistance, that is, one leg or one side of the body resists the other leg or other side of the body.

A further object is to provide a device of this character in which the standards may be inverted to space the balance board closer to the floor than ordinarily.

A further object is to provide a device of this character in which the upper sides of the ends of the balance board are inclined upwardly and outwardly and are covered with rubber pads, and the board is provided at the inner ends of said portions with projections which extend across the board and which have curved upper surfaces, to prevent the feet from slipping off the board.

A further object is to provide a device of this character which will be formed of a few strong, simple and durable parts, which will be inexpensive to manufacture, and which will not easily get out of order.

With the above and other objects in view, the invention consists of certain novel details of construction and combinations of parts hereinafter fully described and claimed, it being understood that various modifications may be resorted to within the scope of the appended claim without departing from the spirit or sacrificing any of the advantages of the invention.

In the accompanying drawing forming a part of this specification:

Figure 1 is a perspective view of an exercising device constructed in accordance with the invention and showing the same in use.

Figure 2 is a longitudinal sectional view of the exercising device.

Figure 3 is a plan view of the exercising device.

Figure 4 is an end elevation of the device with portions broken away.

Figure 5 is a detail end elevation, drawn to an enlarged scale, with portions broken away, to show the ball bearings of one of the standards for receiving one end of the balance board shaft.

Figure 6 is a perspective view of the balance board.

Figure 7 is a perspective view of the balance board shaft.

Figure 8 is a perspective view of a modified form of the exercising device in which the balance board is a rod shaped to be grasped by the hands.

Referring now to the drawing in which like characters of reference designate similar parts in the various views, the device includes a pair of standards 10 of substantially rectangular contour, each comprising an outer section 11, as best shown in Figure 5, and an inner section 12, the sections being removably secured together by screws 13. The outer section is provided with a recess 14, and the inner section is provided with an opening 15 in axial alignment with the recess 14.

A balance board shaft 16 is engaged at the ends through the openings 15 in the inner sections of the standards and is uniformly reduced and threaded at each end to receive the inner race member 17 of a ball bearing assembly, the outer race member 18 of which is snugly received in the recess 14 in the outer section 11 of the standard. Bearing balls 19 are disposed between the race members to mount the shaft for noiseless and anti-friction movement in the standards.

A balance board 20 is provided on the bottom face at the transverse center thereof with an inverted V-shaped notch 21 to receive the upper side of the shaft 16. The notch is located midway between the ends of the balance board. The balance board is of sufficient width to extend nearly to the inner sections 12 of the standards, as best shown in Figures 3 and 4. The balance board is of sufficient length to extend beyond the standards, and to prevent the operator's feet from slipping off the balance board the upper sides 22 of the end portions are inclined upwardly and outwardly and are covered with rubber pads 23. The balance board is provided at the inner ends of said end portions with projections 24 which have curved upper surfaces extending all the way across the board.

The openings 15 and recesses 14 of the standards are disposed nearer the upper ends of the standards than the lower ends. The purpose of this is to permit the standards being inverted end to end to dispose the balance board closer to the floor than ordinarily.

In operation, the operator places his feet on the rubber covered ends of the board and then supporting himself by his hands touching a wall or other support, teeters or seesaws the balance board by elevating one leg and dipping the other leg to simulate bicycle riding up grade.

A modified form of the invention is shown in Figure 8 in which the standards 25 are identical with the standards 10 so that the description will not be repeated. In this form of the inven-

tion, however, the balance board is in the form of a long rod **26** of circular cross section, secured intermediate its ends to a shaft **27** carried by the standards **25**, through the medium of a sleeve **28** formed integral with and transversely of the shaft **27**. In this form of the invention, the operator may make a hand stand on the rod **26** with his feet disposed against the wall, or supported in any other manner, and seesaw the rod for exercising the arms and shoulders.

From the above description it is thought that the construction and operation of the invention will be fully understood without further explanation.

What is claimed is:

An exerciser comprising a pair of spaced substantially rectangular standards, a shaft connecting the standards together and rotatably mounted at the ends in openings in the standards, a balance board provided on the bottom face at its transverse center with an inverted V-shaped notch to receive the upper side of the shaft between the standards, said openings in the standards being disposed nearer the upper ends of the standards than the lower ends to permit the standards being inverted to space the shaft nearer a floor and thus vary the height to which the ends of the balance board may rise under impulse of the feet of the user, the balance board extending at the ends beyond the standards, the upper sides of the end portions of the balance board being inclined upwardly and outwardly, rubber pads on said end portions, the balance board being provided at the inner ends of said end portions with projections which have curved upper surfaces extended all the way across the board, said inclined portions and said projections preventing the operator's feet from slipping from the balance board.

WALTER B. BECHMAN.