No. 769,273. PATENTED SEPT. 6, 1904.

H. C. F. M. PETITDIDIER & T. M. SCHMITT.

INCLOSED ELECTRIC ARC LAMP.

APPLICATION FILED NOV. 10, 1903.

NO MODEL. 3 SHEETS—SHEET 1.

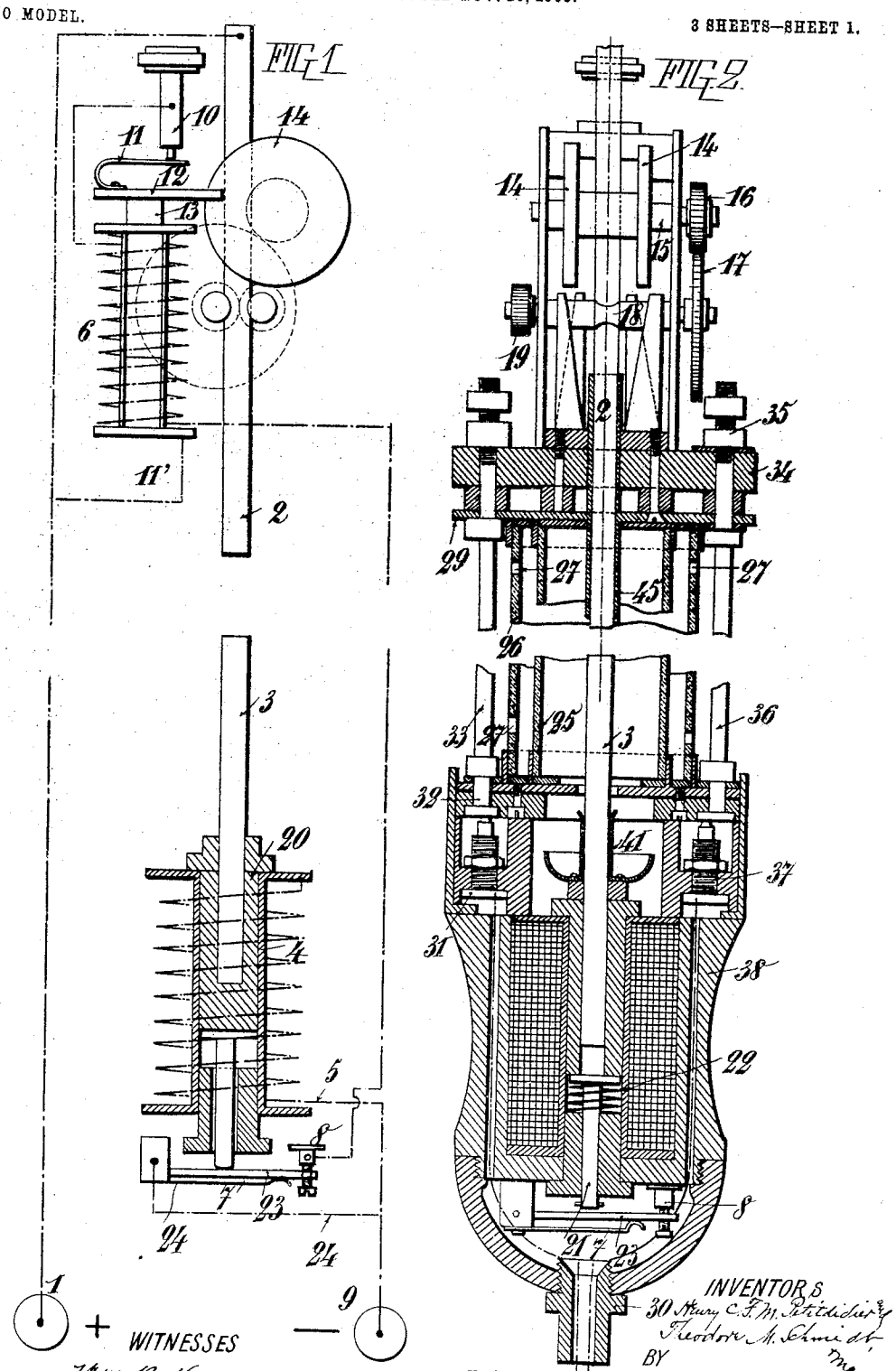

WITNESSES

Wm. B. Kerkam

Gustave R. Thompson.

INVENTORS

Henry C. F. M. Petitdidier and Theodore M. Schmidt, Massie

BY

Mauro, Cameron, Lewis,

ATTORNEYS.

No. 769,273. PATENTED SEPT. 6, 1904.

H. C. F. M. PETITDIDIER & T. M. SCHMITT.

INCLOSED ELECTRIC ARC LAMP.

APPLICATION FILED NOV. 10, 1903.

NO MODEL. 3 SHEETS—SHEET 2.

FIG. 3.

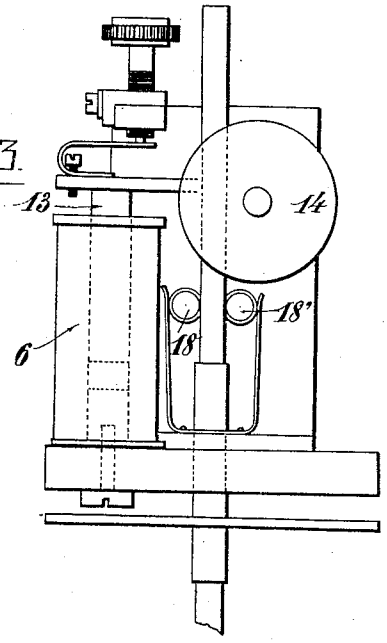

FIG. 4.

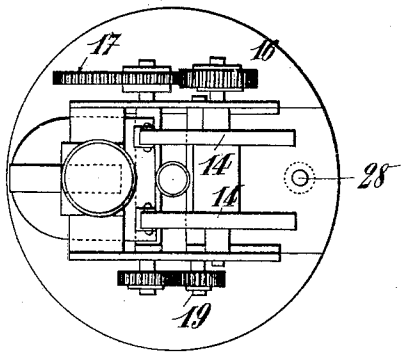

WITNESSES:

Wm. B. Kerkam

Gustave R. Thompson

Henry C. F. M. Petitdidier and Theodore M. Schmidt INVENTORS

BY

Munn, Cameron, Lewis & Massie

ATTORNEYS.

No. 769,273. PATENTED SEPT. 6, 1904.

H. C. F. M. PETITDIDIER & T. M. SCHMITT.

INCLOSED ELECTRIC ARC LAMP.

APPLICATION FILED NOV. 10, 1903.

NO MODEL. 3 SHEETS—SHEET 3.

Fig. 5.

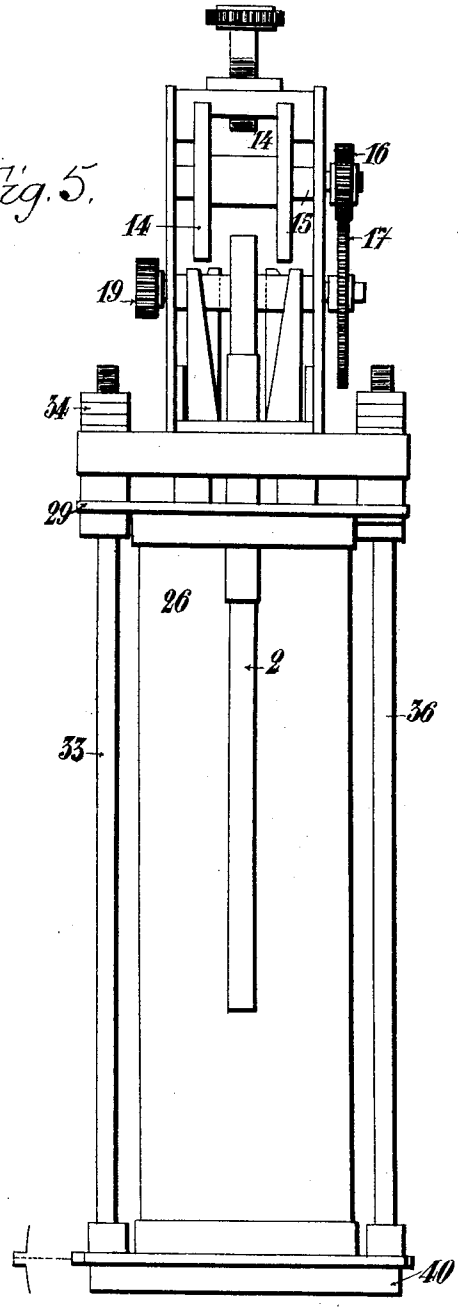

FIG. 5a

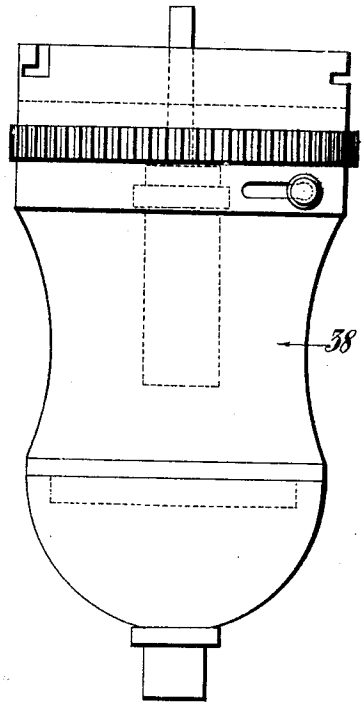

WITNESSES:

Wm. B. Herkam.

Gustave R. Thompson

INVENTORS

Henry C. F. M. Petitdidier and
Theodore M. Schmidt.

BY

Mauro, Cameron & Lewis,

ATTORNEYS.

No. 769,273. Patented September 6, 1904.

UNITED STATES PATENT OFFICE.

HENRY CHARLES FELIX MARIE PETITDIDIER AND THEODORE MARIE SCHMITT, OF PARIS, FRANCE, ASSIGNORS TO THEMSELVES AND VICTOR RECLUS, OF PARIS, FRANCE.

INCLOSED ELECTRIC-ARC LAMP.

SPECIFICATION forming part of Letters Patent No. 769,273, dated September 6, 1904.

Application filed November 10, 1903. Serial No. 180,615. (No model.)

To all whom it may concern:

Be it known that we, HENRY CHARLES FELIX MARIE PETITDIDIER and THEODORE MARIE SCHMITT, engineers, both citizens of the Republic of France, and residents of Paris, France, have invented a new and useful Improvement in Inclosed Electric-Arc Lamps, which improvement is fully set forth in the following specification.

This invention relates to an inclosed electric-arc lamp, which is illustrated, by way of example, in the accompanying drawings, in which—

Figure 1 is a diagram showing the electrical connections of the lamp. Fig. 2 shows the lamp in central section. Fig. 3 is a side view, and Fig. 4 a plan view, showing the operative parts controlling the separation of the carbons. Figs. 5 and 5ª show in elevation the two parts of the lamp separated to permit the insertion of the lower carbon.

Our improved arc-controlling mechanism or regulator essentially comprises an electromagnet the coil of which is arranged in parallel with the main circuit, which coil when traversed by a current magnetizes a movable flanged core. In consequence of this excitation the core is, as it were, sucked in by the electromagnet and in this act undergoes a vertical displacement, which can be utilized to effect a movement of the upper carbon and to carry the latter toward the lower carbon.

The shunt-circuit through the electromagnet is controlled by a circuit-breaker, which only closes the circuit when the carbons are too far apart. This circuit-breaker is controlled by a second electromagnet placed in series in the main circuit. If in consequence of an increase of resistance arising from undue separation of the carbons the intensity of the current traversing the electromagnet arranged in series on the main circuit is diminished, the circuit-breaker closes the shunt-circuit and the core of the electromagnet placed in parallel to the main circuit is displaced and then acts on the operative parts arranged to actuate the upper carbon so as to draw it toward the lower carbons.

The operative parts arranged to effect the displacement of the lower carbon essentially comprise two disks or rollers, between which the carbon is passed and which at the time of the movement of the shunt electromagnet-core rotate for the purpose of moving the upper carbon through the intermediary of friction-roller and spur-gearing.

The electromagnet-core and the rollers effecting the displacement of the upper carbon may be operatively connected either through a simple arrangement of disks actuated by the magnetic attraction of the flange of the core or by a ratchet-wheel actuated by a pole which is either fixed or pivoted upon the said core-flange. In the arrangement shown in the drawings the driving is shown as if effected by the magnetic attraction of the core acting on disks controlling the rollers. It is obvious that this arrangement can be replaced by a ratchet-and-pawl mechanism without requiring further modifications.

As shown in Fig. 1, the current enters the lamp through the terminal 1 and passes therefrom to the upper carbon 2. From the upper carbon, 2, the current (when the carbons are in contact or are separated to the necessary distance) passes to the lower carbon, 3, and the flange of the bobbin 4, through the coils on this bobbin, and returns to the terminal 9 through the wire 5. All the members of the upper part of the lamp mechanism are preferably connected together electrically.

In parallel with the main circuit is mounted an electromagnet 6, wound with fine wire, which is controlled by the circuit-breaker 7 8. The blade 7 of the circuit-breaker is connected to the terminal 9. The terminal 8 of the circuit-breaker is connected to the winding of the electromagnet 6, which at the other extremity is connected to the terminal 10 of a circuit-breaker 11, fixed to the flange 12 of the core 13 of the electromagnet 6. The terminal 10 is insulated from the members of the upper part of the lamp mechanism, to which current is led by the wire 11′. The flange 12 of the core 13 of the electromagnet 6 is provided with two notches 12′, Fig. 4, within each of

which a disk 14 is placed. The two disks 14 are mounted on a spindle 15, carrying a pinion 16, gearing with a wheel 17, keyed on the spindle 18, forming one of the drums or rollers between which the upper carbon, 2, is passed. The spindle 18 carries a pinion 19, which communicates motion to the spindle 18′ of the other roller.

The lower carbon, 3, is mounted in a core of magnetizable material 20, the lower part of which constitutes the core of the electromagnet 4. This core is terminated by a rod 21 and is subject to the action of a spring 22, constantly thrusting it upward—that is to say, tending to maintain the lower carbon, 3, applied in contact with the upper carbon, 2. The rod 21 is placed opposite a plate 23, which is normally held in contact with the terminal 8 by a spring 7. This plate 23 and the terminal 8 constitute the circuit-breaker controlling the shunt-current in the bobbin 6.

First considering the arrangement shown in the diagram before entering into details of construction with reference to the operation of the lamp it is assumed that the lamp is at rest, the carbons 2 and 3 being in contact. If current is switched on through the lamp, this current enters at the terminal 1, passes to the upper carbon, 2, then to the lower carbon, 3, from thence to the bobbin-coils 4 and through the wire 5 to the terminal 9. As a consequence of the passage of the current through the electromagnet 4 the core 20 is attracted, the carbon 3 is separated from the carbon 2, and the arc is formed. As a consequence of the burning away of the carbons 2 and 3 the distance between their extremities is increased. The resistance to the current increases also, and the attraction of the series electromagnet 4 on its core 20 diminishes. This core 20 at a predetermined instant—*i. e.*, when the intensity of the current traversing the bobbin 4 becomes too feeble—is lifted by the spring 22, drawing the rod 21 from the plate 23, which under the action of the spring 7 comes into contact with the terminal 8. The shunt-circuit through the bobbin 6 is therefore closed. The current from the terminal 1 reaches the members of the upper part of the lamp mechanism through the wire 11′, passes thence into the spring-blade 11, then to the insulated terminal 10, with which the spring-blade 11 is in contact, from thence traverses the bobbin-windings 6, reaches the terminal 8, the plate 23, and finally passes through the wire 24 to the terminal 9. As a consequence of the passage of current through the electromagnet 6, the core 13 and its flange 12 are magnetized, and the core 13, by moving under the action of the current through the electromagnet 6, acts by attraction on the disks 14 and drives them during the descending movement of the core. The rotation of the disks 14 causes the rotation of the cylinders 18 18′, and consequently causes the upper carbon to descend.

As soon as a descending movement of the upper carbon, 2, is effected the spring-blade 11 comes out of contact with the terminal 10. The shunt-circuit is thus opened, and the core 13, being no longer energized, rises under the action of a suitably-arranged spring. As soon as the core 13 has risen the blade 11 reestablishes contact with the insulated terminal 10, the shunt-circuit is again closed, causing the upper carbon to again descend, and so on until the resistance offered by the separation of the two carbons 2 and 3 falls to its normal value. As soon as the resistance is normal the intensity of the current traversing the electromagnet 4 also reaches the value at which the core 20 is attracted—that is to say, reaches the value at which the blade 7 is separated from the terminal 8. When this blade is out of contact with the terminal 8, no current can pass through the electromagnet 6 until the resistance is again altered by too great a separation of the carbons.

From what has been hereinabove stated it is obvious that the lamp is automatically regulated in a very simple manner by means of the electromagnet 6, and the lighting or striking of the arc is rendered possible by means of the separation of the carbons effected by the electromagnet 4.

The details of construction of the apparatus are next described. As above mentioned, our invention relates to inclosed electric-arc lamps. The chamber in which the arc is produced is contained within two concentric globes 25 26, the interior globe being entirely closed and the exterior globe being provided with openings 27 to permit a free circulation of air between these two envelops in order to avoid undue heating. Moreover, in order to avoid breakage or deformation of the chamber by reason of the formation of gases a valve 47 is placed in the upper part, (in the plate 29,) the said valve being of as simple a construction as desired.

The positive and negative terminals 1 and 9 can be placed on the side of the lamp, or, by preference, the wire carrying the current can be brought through a tube 30, arranged underneath, and which is screwed or secured in an incandescence or ordinary gas-burner socket. The current from the positive pole of the source of electric energy arrives at a terminal 31, insulated from the members of the upper frame of the lamp, and the upper end of the said terminal is in contact with a block 32, formed on a column 33, attached to the insulating-plate 34, supporting the upper mechanism. From this terminal the current passes into the lamp-frame, and consequently to the uninsulated upper carbon, by way of spring-contacts 46. The shunt-circuit which starts from the bobbin 8 is connected to a

terminal 35, to the column 36, the terminal 37, and, finally, to the circuit-breaker 8 23, passing thence to the return-current wire.

In order to facilitate the insertion of the lower carbon, the lamp is made in two parts. (See Figs. 5 and 5ª.) The lower part 38 is secured by a bayonet-joint beneath the lower end 40 of the chamber inclosing the arc. If it is necessary to replace the lower carbon, the two parts of the lamp are taken apart. The exhausted carbon 3 is withdrawn and replaced by a new carbon. The latter is held by claws 41, which also form a cup for receiving the sparks thrown off from the carbons during the formation of the arc. The insertion of the upper carbon is effected, as can readily be understood, in a very easy manner by passing between the two rollers 18 and 18′ a new carbon, which pushes out the exhausted carbon. This upper carbon 2 is guided in its movements by a porcelain tube 45.

The resistance necessary to insure the due operation of the lamp when supplied with a current of one hundred and ten volts can be arranged either around the upper part of the lamp mechanism or in the lower part around the electromagnet 4 in a manner well understood and requires no illustration.

We claim—

1. In an arc-lamp, a carbon-holder, an electromagnet in series in the main circuit, a movable core for said magnet and supporting the carbon-holder, feed mechanism for one of the carbons, an electromagnet arranged in parallel with the main circuit for actuating the feed mechanism and controlled by said series electromagnet.

2. In an arc-lamp, a carbon-holder, an electromagnet in series in the main circuit, a movable core for said magnet supporting said holder, feed mechanism for one of the carbons, an electromagnet arranged in parallel with the main circuit for actuating the feed mechanism, a circuit-breaker in said parallel circuit, and means operated by the core of the series magnet for breaking said circuit.

3. In an arc-lamp a carbon-holder, an electromagnet in series in the main circuit, a movable core for said magnet supporting said carbon-holder, a spring-actuated follower for forcing the core outward, feed mechanism for one of the carbons, an electromagnet arranged in parallel with the main circuit for actuating the feed mechanism, a circuit-breaker in said parallel circuit operated by the core of the series magnet through the said follower.

4. In an arc-lamp, an electromagnet in parallel with the main circuit, a movable core in said magnet, a plate attached to the end of said core and provided with notches, revoluble disks having their rims entering said notches whereby said disks are caused to rotate as the core is drawn into the energized magnet, and carbon-feed mechanism operated by said disks.

5. In an arc-lamp, a carbon-holder, an electromagnet in series in the main circuit for withdrawing said holder, an electromagnet arranged in parallel with the main circuit, a movable core in said magnet, a plate attached to the end of said core and provided with notches, revoluble disks having their rims entering said notches whereby said disks are caused to rotate as the core is drawn into the energized magnet, carbon-feed mechanism operated by said disks and a circuit-breaker in the parallel circuit operated by the series electromagnet.

6. In an arc-lamp, the combination of an electromagnet provided with a movable core in parallel with the main circuit, means for imparting a reciprocating movement to said core and a carbon-advancing mechanism operated by said core.

7. In an arc-lamp, the combination, in a shunt of the main circuit, of an electromagnet provided with a movable core, a circuit-breaker actuated by said core, means for returning the core to its normal position for closing said circuit and means actuated by said core whereby a step-by-step advance of one of the carbons is effected.

8. In an arc-lamp, one or more glass globes constituting an arc-chamber, a frame for supporting said globes, a separable casing adapted to support a carbon and its feeding mechanism and provided with bayonet-joints for engaging studs on said frame.

9. In an arc-lamp, a plurality of concentrically-arranged glass globes provided with openings for air circulation, the inner globe constituting an arc-chamber, a frame for supporting said globes, a separable casing adapted to support a carbon and its feeding mechanism and provided at its open end with bayonet-joints for engaging studs on said frame.

In testimony whereof we have signed this specification in the presence of two subscribing witnesses.

HENRY CHARLES FELIX MARIE PETITDIDIER.
THEODORE MARIE SCHMITT.

Witnesses:
EMILE LEDRET,
AUGUSTUS E. INGRAM.