AU9332741

(12) PATENT ABRIDGMENT (11) Document No. AU-B-32741/93
(19) AUSTRALIAN PATENT OFFICE (10) Acceptance No. 650195

(54) Title
RATE-BASED ADAPTIVE CONGESTION CONTROL SYSTEM AND METHOD FOR INTEGRATED PACKET NETWORKS

International Patent Classification(s)
(51)[5] **H04L 012/56** **H04L 012/24** **H04M 011/06**

(21) Application No. : **32741/93** (22) Application Date : **10.12.92**

(87) PCT Publication Number : **WO93/14605**

(30) Priority Data

(31) Number	(32) Date	(33) Country
823724	**21.01.92**	**US UNITED STATES OF AMERICA**

(43) Publication Date : **03.08.93**

(44) Publication Date of Accepted Application : **09.06.94**

(71) Applicant(s)
CODEX CORPORATION

(72) Inventor(s)
MICHAEL G HLUCHYJ; NANYING YIN; DANIEL B GROSSMAN

(74) Attorney or Agent
PHILLIPS ORMONDE & FITZPATRICK , 367 Collins Street, MELBOURNE VIC 3000

(56) Prior Art Documents
US 4849968
US 4769811
US 4769810

(57) Methods are also claimed.

CLAIM

1. A system for providing rate-based congestion control in an integrated fast packet network, each packet being capable of conveying a plurality of levels of congestion indication, including at least:

source edge node means, operably coupled to receive the fast packet traffic for transmission over the network, said means having a predetermined negotiated throughput rate, for rate-based monitoring and rate enforcement of the traffic utilizing a monitor/enforcer means,

transit node means, operably coupled to the source edge node means, having a plurality of intermediate nodes for providing at said nodes fast packet transmission paths, and

destination edge node means, operably coupled to the transit node means, for providing at least a correlated congestion level and for outputting traffic at a realized throughput rate, such that the realized throughput rate of the transmitted fast packets may exceed the predetermined

.../2

negotiated throughput rate where the fast packets utilize unallocated or unused network capacity,

wherein the monitor/enforcer means further provides a fast packet discard priority and

wherein the transit node means further includes at least congestion-reducing means for determining a transit node queue group (TNQG) congestion level for fast packets and for discarding fast packets based on said TNQG congestion level and on said discard priority.

13. A system for providing rate-based congestion control in an integrated fast packet network, each packet being capable of conveying a plurality of levels of congestion indication, including at least:

source edge node means, operably coupled to receive the fast packet traffic for transmission over the network, said means having a first predetermined negotiated throughput rate R and a first previously negotiated bucket size B, for rate-based monitoring and rate enforcement of the traffic utilizing a leaky bucket monitor/enforcer means for at least determining and marking a fast packet discard priority such that, when a frame is received in excess of said rate R and said bucket size B, the discard priority of the first fast packet comprising said frame is set to 'last discarded' and the discard priority of subsequent fast packets is set to 'first discarded', except that if the BCCL state detection unit indicates that congestion along the path exceeds a predetermined level, the frame is discarded and a control fast packet is sent, or if a second predetermined negotiated excess throughput rate R2 and a second previously negotiated excess bucket size B2 is exceeded, the frame is discarded,

transit node means, operably coupled to the source edge node means, having a plurality of intermediate nodes for providing at said nodes fast packet transmission paths utilizing congestion-reducing means for determining a transit node queue group (TNQG) congestion level for fast packets and for discarding fast packets based on said TNQG congestion level and on said discard priority, and

destination edge node means, operably coupled to the

transit node means, for providing at least a correlated congestion level and for outputting reassembled frames of transmitted fast packets at a realized throughput rate,

such that the realized throughput rate of the transmitted fast packets may exceed the first predetermined negotiated throughput rate where the fast packets utilize unused or unallocated network capacity,

further including a backwards correlated congestion level state determiner (BCCL STATE DET), operably coupled to the destination edge node means, for providing a backwards correlated congestion level (BCCL) state to the leaky bucket monitor/enforcer means via a control fast packet.

OPI DATE 03/08/93 APPLN. ID 32741/93
AOJP DATE 14/10/93 PCT NUMBER PCT/US92/10638

AU9332741

INTERNATIONAL APPLICATION PUBLISHED UNDER THE PATENT COOPERATION TREATY (PCT)

(51) International Patent Classification 5 :
H04Q 11/04, H04J 3/24

A1

(11) International Publication Number: WO 93/14605

(43) International Publication Date: 22 July 1993 (22.07.93)

(21) International Application Number: PCT/US92/10638

(22) International Filing Date: 10 December 1992 (10.12.92)

(30) Priority data:
823,724 21 January 1992 (21.01.92) US

(71) Applicant: CODEX CORPORATION [US/US]; 20 Cabot Boulevard, Mansfield, MA 02048 (US).

(72) Inventors: HLUCHYJ, Michael, G. ; 27 Jackson Road, Wellesley, MA 02181 (US). YIN, Nanying ; 59 Commonwealth Park West, Newton Center, MA 02159 (US). GROSSMAN, Daniel, B. ; 117 Mylod Street, Norwood, MA 02062 (US).

(74) Agents: PARMELEE, Steven, G. et al.; Motorola, Inc., Intellectual Property Dept., 1303 E. Algonquin Road, Schaumburg, IL 60196 (US).

(81) Designated States: AU, CA, JP, European patent (AT, BE, CH, DE, DK, ES, FR, GB, GR, IE, IT, LU, MC, NL, PT, SE).

Published
With international search report.

650195

(54) Title: RATE-BASED ADAPTIVE CONGESTION CONTROL SYSTEM AND METHOD FOR INTEGRATED PACKET NETWORKS

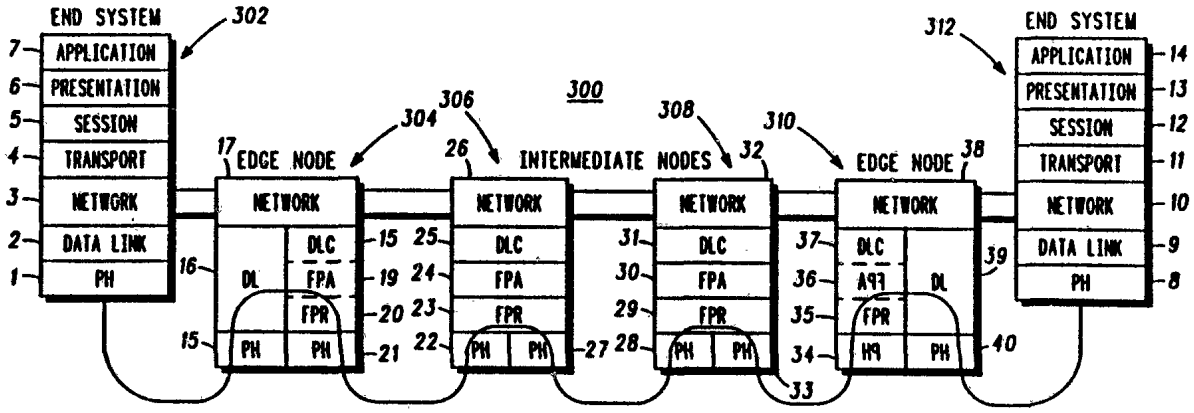

(57) Abstract

An adaptive congestion control device (600) and method provides for minimizing congestion on a basis of independent congestion level indicators (626). The invention further provides efficient recovery in an integrated packet network (17, 26, 32, 38) that becomes congested. In addition, the invention ensures that a user may utilize the network on a space-available basis when capacity is available in the network.

RATE-BASED ADAPTIVE CONGESTION CONTROL SYSTEM AND METHOD FOR INTEGRATED PACKET NETWORKS

~~Field of the Invention~~

This invention relates generally to data processing and data communications, and more particularly relates to controlling congestion in an integrated packet network.

~~Background of the Invention~~

Businesses, institutions, government agencies, common carriers, and value-added service providers utilize packet-switched networks that integrate frame-delimited data traffic (including frame relay), packetized speech, and constant bit rate (non-delimited) traffic onto common transmission facilities. For such networks, a basic unit of transmission has been defined to be a "fast packet." A fast packet typically contains a header that includes connection identification and other overhead information, and is fixed or restricted in length (e.g., to contain a "payload" of 48 octets of user information). Where is it necessary to convey information of length greater than that of a maximum payload size, a fast packet adaption protocol is utilized, operating at a higher level than a fast packet relaying protocol, where the fast packet adaption protocol includes a segmentation and reassembly function. It is useful to note that transmission of integrated packets requires congestion control because of its bursty nature, while transmission of constant bit rate (CBR) traffic does not require such control.

Packet switched networks are subject to congestion when traffic offered to the network exceeds a capacity of the

AUSTRALIAN PATENT OFFICE LS

network. Such congestion is random in nature. End-user equipment tends to offer traffic in "bursts," interspersed with periods of inactivity. Networks are typically designed to accommodate some expected aggregate offered load. However, cost to an operator of the transmission network facilities and related equipment increases as the capacity of the network. Thus, networks are often designed to accommodate less than an absolute maximum possible offered load, and to rely on statistical effects to avoid blocking of transmission. Such a design may lead to congestion.

During occurrence of congestion, queues internal to nodes that constitute the network grow, and may exceed the memory allocated to them, forcing packets to be discarded. In addition, the end-to-end transit delay experienced by packets traversing the network increases significantly as offered traffic increases. Discarding of packets and increased end-to-end transit delay degrades an end-user's perceived quality of service. In addition, discard or excessive delay cause commonly used end-to-end protocols to retransmit not only those packets which were discarded or delayed, but all packets which were unacknowledged at a time that the discard or time-out was determined. This typically results in an avalanche effect, during which the network ceases to perform useful work and cannot recover without manual intervention.

In a "connection-oriented" packet network, values of quality-of-service parameters are negotiated among originating end-user equipment, the network(s), and terminating end-user equipment. Categories of negotiated parameters include throughput and transit delay. Throughput parameters typically describe the users' expectations of traffic to be offered during a given time period, an estimation of a greatest amount of traffic the users expect to offer during such a period, and a metric for describing "burstiness" of traffic. This throughput information is used by the

network(s) for purposes such as resource allocation and rate enforcement.

There is a need for a device and method for providing a rate-based congestion control for integrated packet networks that performs rate enforcement such that end-user equipment may exceed an expected throughput agreed during negotiation, utilizing the network(s) on a space-available basis when capacity is available in the network(s).

According to one aspect of the present invention there is provided a system for providing rate-based congestion control in an integrated fast packet network, each packet being capable of conveying a plurality of levels of congestion indication, including at least:

source edge node means, operably coupled to receive the fast packet traffic for transmission over the network, said means having a predetermined negotiated throughput rate, for rate-based monitoring and rate enforcement of the traffic utilizing a monitor/enforcer means,

transit node means, operably coupled to the source edge node means, having a plurality of intermediate nodes for providing at said nodes fast packet transmission paths, and

destination edge node means, operably coupled to the transit node means, for providing at least a correlated congestion level and for outputting traffic at a realized throughput rate, such that the realized throughput rate of the transmitted fast packets may exceed the predetermined negotiated throughput rate where the fast packets utilize unallocated or unused network capacity,

wherein the monitor/enforcer means further provides a fast packet discard priority and

wherein the transit node means further includes at least congestion-reducing means for determining a transit node queue group (TNQG) congestion level for fast packets and for discarding fast packets based on said TNQG congestion level and on said discard priority.

According to a further aspect of the present

AUSTRALIAN PATENT OFFICE LS MJP

invention there is provided a system for providing rate-based congestion control in an integrated fast packet network, each packet being capable of conveying a plurality of levels of congestion indication, including at least:

source edge node means, operably coupled to receive the fast packet traffic for transmission over the network, said means having a first predetermined negotiated throughput rate R and a first previously negotiated bucket size B, for rate-based monitoring and rate enforcement of the traffic utilizing a leaky bucket monitor/enforcer means for at least determining and marking a fast packet discard priority such that, when a frame is received in excess of said rate R and said bucket size B, the discard priority of the first fast packet comprising said frame is set to 'last discarded' and the discard priority of subsequent fast packets is set to 'first discarded', except that if the BCCL state detection unit indicates that congestion along the path exceeds a predetermined level, the frame is discarded and a control fast packet is sent, or if a second predetermined negotiated excess throughput rate R2 and a second previously negotiated excess bucket size B2 is exceeded, the frame is discarded,

transit node means, operably coupled to the source edge node means, having a plurality of intermediate nodes for providing at said nodes fast packet transmission paths utilizing congestion-reducing means for determining a transit node queue group (TNQG) congestion level for fast packets and for discarding fast packets based on said TNQG congestion level and on said discard priority, and

destination edge node means, operably coupled to the transit node means, for providing at least a correlated congestion level and for outputting reassembled frames of transmitted fast packets at a realized throughput rate,

such that the realized throughput rate of the transmitted fast packets may exceed the first predetermined negotiated throughput rate where the fast

AUSTRALIAN PATENT OFFICE MJR

packets utilize unused or unallocated network capacity,

further including a backwards correlated congestion level state determiner (BCCL STATE DET), operably coupled to the destination edge node means, for providing a backwards corelated congestion level (BCCL) state to the leaky bucket monitor/enforcer means via a control fast packet.

According to a still further aspect of the present invention there is provided a method for providing rate-based congestion control in an integrated fast packet network, each packet being capable of conveying a plurality of levels of congestion indication, including at least the steps of:

receiving, at a source edge, the fast packet traffic for transmission over the network utilizing a predetermined negotiated throughput rate, providing rate-based monitoring and rate enforcing the traffic utilizing a monitor/enforcer,

providing, at a plurality of intermediate transit nodes, fast packet transmission paths, and

providing, at a destination edge node, at least a correlated congestion level and for outputting reassembled frames of transmitted fast packets at a realized throughput rate,

such that the realized throughput rate of the transmitted fast packets may exceed a predetermined negotiated throughput rate where the fast packets utilized unused or unallocated network capacity.

A preferred embodiment of the present invention will now be described with reference to the accompanying drawings wherein:-

AUSTRALIAN PATENT OFFICE LS

~~Brief Description of the Drawings~~

FIG. 1, numeral 100, illustrates relevant fields of an information packet (102), typically a fast packet, and information gathering of congestion information along a fast packet source-to-destination connection path of a subnetwork (SUBPATH) utilizing a fast packet with a multiple bit congestion level field in accordance with the present invention.

FIG. 2, numeral 200, illustrates typical queue group congestion level transitions in accordance with the present invention.

FIG. 3, numeral 300, illustrates a protocol profile of a network, modelled according to the Open System Interconnection (OSI) reference model, utilizing the method of the present invention.

FIG. 4, numeral 400, illustrates a leaky bucket monitor/enforcer in accordance with the present invention where said monitor/enforcer is visualized as a fictitious queue model system.

FIG. 5, numeral 500, sets forth a flow diagram illustrating a leaky bucket operation and discard priority marking in accordance with the present invention.

FIG. 6, numeral 600, illustrates a first embodiment of a system that utilizes the present invention for providing rate-based congestion control in an integrated fast packet network, each fast packet capable of conveying a plurality of levels of congestion.

FIG. 7, numeral 700, sets forth a flow chart illustrating steps for sampling a transit queue group for congestion levels in accordance with the method of the present invention.

FIG. 8, numeral 800, sets forth a flow chart showing steps for fast packet discarding and fast packet congestion

AUSTRALIAN PATENT OFFICE LS

level marking at a data transmit queue in accordance with the present invention.

FIG. 9, numeral 900, sets forth a flow chart showing steps for fast packet discarding and fast packet congestion level marking at a voice transmit queue in accordance with the present invention.

FIG. 10, numeral 1000, sets forth a flow chart illustrating steps for updating congestion and tagging status, forward explicit congestion notification (FECN) marking and creation of backward control fast packet at a destination edge node in accordance with the method of the present invention.

FIG. 11, numeral 1100, is flow chart illustrating steps for updating a tag status when receiving a first fast packet in a frame at a destination edge node in accordance with the method of the present invention.

FIG. 12, numeral 1200, is a flow chart illustrating steps for creating and storing a backward congestion code at a destination edge node in accordance with the method of the present invention.

FIG. 13, numeral 1300, is a flow chart illustrating steps for receiving a control fast packet in a backward direction at a source edge node in accordance with the method of the present invention.

FIG. 14, numeral 1400, is a flow chart illustrating steps for receiving a data fast packet in a backward direction and setting a backward explicit congestion notification (BECN) at a source edge node in accordance with the method of the present invention.

FIG. 15, numeral 1500, shows the steps of the method of the present invention for providing rate-based congestion control in an integrated fast packet network, each fast packet capable of conveying a plurality of levels of congestion and having a predetermined throughput rate.

~~Detailed Description of a Preferred Embodiment~~

The present invention provides several advantages over known approaches. First, at least four levels of network congestion are conveyed in a fast packet header in a forward direction (i.e., toward a destination user's equipment), providing corresponding levels of action by the network. Since other schemes have two levels or none, the present invention, by utilizing the four levels in a unique fashion, provides for a greater scope of action by the network.

Second, levels of congestion are tracked and filtered independently by intermediate switching nodes. An indication of a highest congestion level encountered between an entry and egress point is conveyed in each fast packet. This approach provides more efficient network operation for paths that cross multiple switching nodes. In addition, this avoids problems (such as are found utilizing density marking schemes) of distinguishing actual congestion from short-term, inconsequential changes in the states of individual switching nodes, when said changes are summed over all the nodes traversed by a path.

Third, when congestion occurs in one or more switching nodes, only those connections which exceed their negotiated throughput parameters receive an explicit congestion indication unless one or more switching node experiences severe congestion. Thus, during periods of mild or moderate congestion, connections operating within the throughput parameters previously negotiated between the end-user equipment and the network continue to receive the throughput so negotiated.

AUSTRALIAN PATENT OFFICE LS

Fourth, stability of the network is independent of specific behavior of end-user equipment. Fifth, feedback of severe congestion information toward an entry to the network causes discarding of information, thus not relying, as does existing art, on discarding at a congested switching node. This frees processing capacity in congested nodes.

FIG. 1, numeral 100, illustrates relevant fields of an information packet (102), typically a fast packet, and information gathering of congestion information along a packet source-to-destination connection path of a subnetwork utilizing a fast packet with a multiple bit congestion level field in accordance with the present invention. The subnetwork typically includes INTERMEDIATE SWITCHING NODES (110), coupled, respectively, to a SOURCE EDGE NODE (108) and to a DESTINATION EDGE NODE (112), the subnetwork further being coupled to at least two end systems, at least one being the SOURCE END SYSTEM (109), and at least one being a DESTINATION END SYSTEM (111), to provide operable transmission of fast packets along the path between the SOURCE EDGE NODE (108) and the DESTINATION EDGE NODE (112), described more fully below (FIG. 6). The data packet includes at least a field CL (104) that represents a multiple bit field, typically two bits, used to store and indicate a congestion level of a most congested internodal link along the path and a data field (106). The congestion level of an internodal link is determined locally in each intermediate node feeding the link. In the preferred embodiment the two bit field of CL takes on values corresponding to normal, mild, moderate, and severe levels of congestion. At each intermediate node fast packets are queued into at least voice and data transit queues, and the congestion level is determined by comparing an average depth of transit queues within a queue group to a set of predetermined thresholds. Voice and data are in separate

queue groups. The threshold values depend on both the queue group and a specific queue within the group (typically high, medium, and low priority queues for the data group). The congestion level is tracked separately for voice and data queue groups, with the congestion level of the data queue group set to that of the most congested priority queue. The DESTINATION EDGE NODE typically (e.g., periodically or after changes in the state of the path) copies the two bit field CL (114) into a second packet (120) containing no user data and only one of three field codes (normal, moderate, and severe) and utilizes a closed-loop feedback scheme to provide backward congestion rate adjustment information. Generally, normal and mild congestion level states are combined to form a Backward Correlated Congestion Level (BCCL) normal state, as described more fully below.

FIG. 2, numeral 200, illustrates typical queue group congestion level transitions in accordance with the present invention. As is clear from FIG. 2, hysteresis is introduced by only allowing queue group congestion level transitions to a normal state when congestion subsides. This hysteresis helps to return the queue group to a normal state more rapidly and provides a more stable operation of the control process. During normal operation, the congestion state of the queue group is 'normal' (202). When the average length of any queue in the queue group exceeds a predetermined level for said queue, the congestion state of the queue group becomes 'mild (204)'. When, in the mild state, the average length of any queue in the queue group exceeds a predetermined level for the queue, the congestion state of the queue group becomes 'moderate' (206). When, in the moderate state, the average length of any queue in the queue group exceeds a predetermined level for the queue, the congestion state of the queue group becomes 'severe' (208). When, in the mild, moderate or severe

states the average length of each queue in the queue group becomes less than a predetermined threshold established for said queue, the congestion state of the queue group becomes 'normal'. Note that the congestion state of the queue group cannot transition from 'severe' to 'moderate' or 'mild', and similarly cannot transition from 'moderate' to 'mild'.

FIG. 3, numeral 300, illustrates a protocol profile of a network, modelled according to the principles of the Open System Interconnection (OSI) Reference Model, utilizing the method of the present invention. End systems (302, 312) are illustrated, each having the seven layers (PH = PHYSICAL (1,8), DATA LINK (2,9), NETWORK (3,10), TRANSPORT (4,11), SESSION (5,12), PRESENTATION (6,13), and APPLICATION (7,14) for the functions of data communication as defined more fully, as is known in the art, in the International Organization for Standardization standard (ISO 7498) and in the International Telegraph and Telephone Consultative Committee's Recommendation X.200. EDGE NODES OF THE END SYSTEMS (304, 310) typically comprise at least a first layer being a physical layer (PH)(15,40) for input (15, 40) and for output (21, 34), a second layer being a data link layer (DL)(16, 39) operably coupled to an end system (302, 312) and being further subdivided into corresponding data link control (DLC) (18, 37), fast packet adaption (FPA) (19, 36), and fast packet relay (FPR) (20, 35) sub-layers operably coupled to at least a first intermediate node (306, 308) via the physical layer (PH) (21, 34), and a third layer (NETWORK) (17, 38). INTERMEDIATE NODES (306, ..., 308) typically comprise at least a first layer being a physical layer (PH) for input (22, 33) and for output (27, 28), a second layer having data link control (DLC) (25, 31), fast packet adaption (FPA) (24, 30), and fast packet relay (FPR) (23, 29) layers operably coupled to at least a first intermediate node (306, 308) via the physical layer (PH) (27,

28), and a third layer (NETWORK) (26, 32). Typically, only the PH layer and FPR and FPA sub-layers are active in the subnetwork during information transfer.

In a first embodiment of the present invention wherein the invention is used for congestion control interworking with frame relay, congestion control is rate-based making use of an unbuffered leaky bucket monitor/enforcer. Leaky buckets are known in the art. The role of the leaky bucket is to monitor a rate of traffic on each fast packet connection at a source edge of the network. By their nature these connections are bursty. Thus the leaky bucket measures an average rate. A time interval over which the leaky bucket averages rate is selectable. Said time interval determines a degree of burstiness allowed to the monitored connection. Typically a short averaging interval is used for connections with CBR-like demand characteristics, and a long averaging interval is used for more bursty connections (such as LAN interconnections).

A leaky bucket monitor/enforcer may be visualized (but typically not implemented) as a fictitious queue model system, illustrated in FIG. 4, numeral 400. Frames, comprised of at least one fast packet, are transmitted to two switches (402, 408), and are selectively directed (in parallel) from the first switch (402) to a summer (406) and from the second switch (408) to a fictitious queue (410) having a queue length Q where the arriving frame finds that Q is less than or equal to a preselected maximum allocation (bucket size) B. The fictitious queue (410) is served at a rate R. Where the frame finds that Q is less than or equal to B, the frame is allowed into the fast packet subnetwork (leaky bucket output). Where the arriving frame finds that Q is greater than B, the first switch directs the frame to a violation handling unit (404),

and the second switch opens to block the frame from entering the fictitious queue (410).

When a frame is received in excess of the negotiated rate R and bucket size B, the violation handling unit (404) provides for using a field code F for marking a first fast packet in the frame for use by the FPA layer (to indicate to the destination edge node that the frame is in violation of the negotiated rate R and bucket size B), and the frame is allowed into the fast packet network. Also, the discard priority for the first fast packet of the frame is set to Last Discarded, as are all fast packets of non-violating frames. In addition, the discard priority of the second and subsequent fast packets of the frame is lowered.

Where a path that the frame is to follow is congested to a level that is greater than or equal to the predetermined level of congestion (as indicated by BCCL), the violation handling unit (404) treats the frame as a violating frame, discards it, and creates an empty fast packet with Last Discard priority in which field code F is marked (for indicating the violation to the destination edge node for that connection). A frame arriving at the leaky bucket with a frame relay discard eligibility (DE) bit set to 1 (due to a prior leaky bucket determination or set by the end system) is treated as a violating frame, as set forth above. Also, the DE bit of any frame marked by the leaky bucket at the source edge node and successfully delivered to the destination edge node is set at the destination edge node before the frame exits the subnetwork.

The monitor/enforcer at the source edge node determines the state of congestion along the forward direction of the connection by a feedback mechanism (described below). Where

a path is congested to a level that is greater than or equal to the predetermined level of congestion, all but the first fast packet of the violating frame is discarded at the source edge node to remove the burden of discarding fast packets from the intermediate nodes since an intermediate node overburdened with discarding fast packets from several violating frames could result in poor performance for fast packets from well-behaved connections. Where the path is congested to a level that is less than the predetermined level of congestion, the discard priority for all but the first fast packet (which carries the marked field code F) of the violating frame is lowered. Where a link becomes congested to a predetermined level wherein packets are dropped, the fast packet discard priority is used to determine which fast packets are discarded first. Hence, fast packets from violating frames are discarded before any of those from fast packet connections that are within the predetermined negotiated rate R.

An excess rate parameter, R2, is used to switch the leaky bucket to the discard mode in an open loop fashion. Conceptually, there are two leaky buckets. A first leaky bucket is used to lower the fast packet discard priority if R is exceeded, and the second leaky bucket is used to discard frames at the source edge where R + R2 is exceeded. In effect, R2 represents an amount of excess traffic that can be discarded from an intermediate link node queue for a fast packet connection without degrading service provided to other fast packet connections sharing the link.

Leaky bucket operation and discard priority marking in accordance with the present invention is set forth in a flow diagram in FIG. 5, numeral 500. The terminology "where affirmative", used below, is defined to mean that a determination recited immediately before "where affirmative"

has been executed, and the determination has been found to be positive. Upon receiving a fast packet (502), one of the following sets of steps are executed:

(A) determining whether the fast packet is a first packet in a frame (504) [see also step set (B)]; where affirmative, updating the leaky bucket queue length Q and setting a first clock (506); determining whether the discard eligibility bit (DE) is set (508) [see step set (G)]; where DE is unset, determining whether Q > B (510)[see step set (F)]; where affirmative, updating leaky bucket 2 with queue length Q2 and setting a second clock (512); determining whether Q2 is greater than a second preselected maximum allocation (bucket size) B2 (514)[see step set (H)]; where Q2 ≤ B2, unset an excess indication (516); determining a number of bits (K) in the fast packet and updating Q2 such that Q2 = Q2 + K (517); setting frame mark indication (518); determining whether a severe congestion indication (greater than or equal to a predetermined congestion level) is set (520)[see step set (I)]; where severe congestion indication is unset, tagging (marking) an FPA frame state (522); setting a discard priority to Last Discarded (524); and transmitting the fast packet (526);

(B) where the fast packet is other than the first packet in the frame, determining whether excess indication is set (544)[see also step set (C)]; and where excess indication is set, and discarding the fast packet (556);

(C) where the forward path is congested and the packet is tagged, or alternatively, the forward path is severely congested, determining whether a frame mark indication is set (546) [see step set (D)]; where the frame mark indication is set, determining whether severe congestion level indication is set (548)[see step set (E)]; where the severe congestion indication is set, and discarding the fast packet (556);

(D) where the frame mark indication is unset, determining the number of bits (K) in the fast packet (538);

updating Q such that Q=Q + K (540); setting a discard priority to Last Discarded (542); and transmitting the fast packet (526);

(E) where the severe congestion level indication is unset, determining the number of bits (K) in the fast packet (550); updating Q2 such that Q2=Q2 + K (552); setting a discard priority to First Discarded (544); and transmitting the fast packet (526);

(F) where Q ≤ B, unsetting the frame mark indication (536); determining the number of bits (K) in the fast packet (538); updating Q such that Q=Q + K (540); setting a discard priority to Last Discarded (542); and transmitting the fast packet (526);

(G) where the DE bit is set in the frame relay frame, bypassing the step of determining whether Q > B in (A) above, and otherwise proceeding as set forth in step (A);

(H) where Q2 > B2, setting an excess indication (528); and discarding the fast packet (530);
and

(I) where a severe congestion indication is set, discarding the fast packet (532); creating an empty packet (534); tagging (marking) an FPA frame state (522); setting a discard priority to Last Discarded (524); and transmitting the fast packet (526).

In a preferred embodiment, data fast packet connections are assigned to a transit internodal (head-of-line priority) queue based on an expected burst size of the source. The larger the expected burst entering the subnetwork, the lower the assigned priority queue and the higher an expected delay. Hence, interactive terminal traffic is typically assigned a high priority, and file transfers a low priority.

FIG. 6, numeral 600, illustrates a first embodiment of a system that utilizes the present invention for providing rate-based congestion control in an integrated fast packet network, each packet having at least a two bit congestion level field. The system comprises at least a source edge node unit (602), operably coupled to receive the fast packet traffic for transmission over the network, said unit having a negotiated throughput rate, for rate-based monitoring and rate enforcement of the traffic utilizing a monitor/enforcer unit that provides a fast packet discard priority, a transit node unit (604), operably coupled to the source edge node unit, having a plurality of intermediate nodes for providing at said nodes fast packet transmission paths, and a destination edge node unit (606), operably coupled to the transit node unit (604), for providing at least a correlated congestion level and for outputting reassembled frames of transmitted fast packets at a realized throughput rate, such that the realized throughput rate of the transmitted fast packets may exceed the predetermined throughput rate where the fast packets utilize unused or unallocated network capacity. Since an end system typically both transmits and receives frames related to the same end-to-end communication, an end system is both a source end system in one direction of communication and a destination end system in the other, and, similarly, an edge node is both a source edge node in one direction of communication and a destination edge node in the other.

The source edge node unit (602) includes at least a monitor/enforcer unit (608), a BCCL state detection unit (612) and a frame relay BECN marking unit (610). The monitor/enforcer unit at least performs leaky bucket operation and discard priority marking. Typically, the discard priority field of a fast packet has two possible values, the one being 'Last Discarded' and the other being 'First Discarded'.

When a frame is received in excess of previously negotiated rate R and bucket size B, the discard priority of the first fast packet comprising the frame is set to Last Discarded and that of subsequent fast packets is set to First Discarded. However, if the BCCL state detection unit (612) indicates that congestion along the path is 'severe', the frame is discarded and a control fast packet is sent, or if the previously negotiated excess rate R2 and excess bucket size B2 is exceeded, the frame is discarded and no control fast packet is sent. When a control fast packet is received in the backward direction (i.e., from the destination edge node) the BCCL state detection unit (612) stores the BCCL from said control fast packet. When the first fast packet of a frame is received in the backward direction, the BECN bit of said frame is set if the BCCL is equal to or greater than a predetermined congestion level.

The transit node unit includes at least congestion-reducing unit (614) for determining a transit node queue group (TNQG) congestion level for fast packets and for discarding fast packets based on said TNQG congestion level and on said discard priority. The transit node unit generally further includes a low pass filter, operably coupled to the congestion-reducing unit (614), for providing a measurement that allows congestion determination of a particular queue. Typically, said measurement is obtained by averaging the sampled queue depth that is input from a queue depth sampler (618).

The destination edge node unit (606) generally comprises at least: a connection congestion level (CL) state determiner (620), operably coupled to the transit node means, for determining a connection congestion level (CL) state; a fast packet adaption (FPA) frame tag state determiner (622), operably coupled to the source edge node means, for

determining a FPA frame tag state; a correlated CL determiner (626), operably coupled to the connection CL state determiner (620) and to the FPA frame tag state determiner (622), for utilizing the CL state and the FPA frame tag state to determine a correlated congestion level that provides a backward correlated congestion level (BCCL) state to a BCCL signal unit (624) that is operably coupled to provide a BCCL state indication to the source edge node unit (602), as described more fully herein, and that further provides a forward correlated congestion level (FCCL) to a FCCL state determiner (628) that is operably coupled to provide a frame relay forward explicit congestion notification (FECN) to a frame relay FECN marking unit (630) that outputs the reassembled frames of transmitted fast packets.

Thus, there is a one-to-one mapping between a frame relay connection and its supporting fast packet connection such that the frame relay connection is allowed to exceed its negotiated (predetermined) throughput rate R without suffering any negative consequences if there is unused capacity along its assigned route. Where the network is congested, the negotiated throughput rate, as monitored by the leaky bucket, determines which connections are in violation, and sets fast packet discard priorities that are used by transit nodes to distinguish violating and non-violating frame traffic in the subnetwork.

The closed-loop feedback system of the first embodiment provides congestion notification across a frame relay interface. At the destination edge node, the congestion state of the forward connection is maintained by examining a congestion level (CL) field in an arriving fast packet for that connection. The congestion state is correlated with the frame tag state that is determined by checking the first fast packet

of each frame for a field code F. The frame tag state is held for a predetermined number of consecutive frames (e.g., 10) after a frame is received with the field code F. For example, correlated congestion level for forward and backward directions may be set as shown in the table below.

FRAME TAG STATE	FAST PACKET CONNECTION CONGESTION LEVEL	FORWARD CORRELATED CONGESTION LEVEL	FECN BIT SET	BACKWARD CORRELATED CONGESTION LEVEL	BECN BIT SET
No	Normal	Normal	No	Normal	No
No	Mild	Normal	No	Normal	No
No	Moderate	Normal	No	Normal	No
No	Severe	Moderate	Yes	Moderate	Yes
Yes	Normal	Normal	No	Normal	No
Yes	Mild	Mild	Yes	Normal	No
Yes	Moderate	Moderate	Yes	Moderate	Yes
Yes	Severe	Severe	Yes	Severe	Yes

In this embodiment the frame relay forward explicit congestion notification (FECN) bit is set on frames crossing the frame relay interface at the destination edge whenever the forward correlated congestion level (FCCL) is in a mild, moderate or severe state. The correlated congestion is returned to the source via a fast packet containing no user data and only one of the three field codes (normal, moderate, severe) for backward congestion, such packet being sent only upon change of congestion level or after a predetermined number of packets have been received since the last such packet was sent. Here, the normal and mild FCCL states are combined to form a backward correlated congestion level (BCCL) normal state. The frame relay backward explicit congestion notification (BECN) bit is set for all frames crossing the frame relay interface to the source whenever the

BCCL state is moderate or severe. Also, if the BCCL state is severe, the leaky bucket begins to strictly enforce the negotiated throughput rate, R, by discarding the violating frames. The frame tag state is still conveyed to the destination edge node for each of these discarded frames by creating an empty fast packet containing the field code F tag. Since the BCCL control signalling is via the unreliable fast packet relay service, it must be reenforced by repeating the indication to compensate for control fast packets lost in the subnetwork. A control fast packet is sent in a backward direction whenever the BCCL state changes or, alternatively, after a predetermined number of frames have been received in a forward direction. The destination edge congestion correlation, FECN marking, backward congestion indication, and BECN marking functions are described more fully below.

FIG. 7, numeral 700, sets forth a flow chart illustrating steps for sampling a transit queue group for congestion levels in accordance with the method of the present invention. For each queue group that is sampled, one of the following sets of steps is executed (in accordance with determinations as set forth below):

(A) reading (sampling) a queue length from a transit queue (702); updating an average queue length for the transit queue (704); determining whether the average (i.e., filtered) queue length is greater than a first predetermined threshold1 (706)[see step set (B)]; where affirmative, determining whether the average queue length is greater than a second predetermined threshold2 (708)[see step set (C)]; where affirmative, determining whether the average queue length is greater than a third predetermined threshold3 (710)[see step set (D); where affirmative, setting the congestion level for the queue to severe (712); determining whether all queues in a selected group have been sampled (714) [see step set (E)]; and,

where affirmative, determining whether the queue group congestion level (CL) is greater than a maximum congestion level in the queue group [see step set (F);

(B) in step (A) where the average queue length is less than or equal to the threshold1, setting the CL to normal and proceeding to the step of determining whether all queues in the selected group have been sampled (714) in step (A);

(C) in step (A) where the average queue length is less than or equal to the threshold2, setting the CL to mild and proceeding to the step of determining whether all queues in the selected group have been sampled (714) in step (A);

(D) in step (A) where the average queue length is less than or equal to the threshold3, setting the CL to moderate and proceeding to the step of determining whether all queues in the selected group have been sampled (714) in step (A);

(E) in step (A) where at least one queue in the selected group is unsampled, proceeding to the step of reading a queue length from a transit queue (702) in step (A);
and

(F) in step (A) where the previous value of the queue group congestion level (CL) is less than the greatest congestion level of any queue in the queue group, or if the congestion levels of all queues in the queue group are 'normal', setting the queue group congestion level to the greatest congestion level of any queue in the queue group (724). Otherwise, the queue group CL is unchanged.

A flow chart for illustrating steps for packet discarding and packet congestion level marking at a data transmit queue in accordance with the present invention is set forth in FIG. 8, numeral 800. For each data packet to be transmitted, one of the following sets of steps is followed (in accordance with determinations as set forth below):

(A) selecting a packet from a queue of data packets to be transmitted (802); determining whether an instantaneous queue length is less than a predetermined high discard level (804)[see step set (B)]; where affirmative, determining whether the queue group congestion level (CL) is severe, or alternatively, whether the instantaneous queue length is greater than a predetermined low discard level (806)[see step set (C); where affirmative, determining whether the discard priority is Last Discarded (808)[see step set (D)]; where affirmative, determining whether the packet CL is less than the queue group CL (810)[see step set (E); where affirmative, setting the packet CL equal to the queue group CL (812); and transmitting the packet (814);

(B) in step (A) where the instantaneous queue length is greater than or equal to the predetermined high discard level, discarding the packet (816); and proceeding to selecting another packet from a queue of data packets to be transmitted (802) in step (A);

(C) in step (A) where the queue group congestion level (CL) is other than severe, and the instantaneous queue length is less than or equal to a predetermined low discard level, proceeding to determining whether the packet CL is less than the queue group CL (810) in step (A);

(D) in step (A) where the discard priority is other than the Last Discarded, discarding the packet (818); and proceeding to select another packet from a queue of fast packets to be transmitted (802) in step (A);
and

(E) in step (A) where the packet CL is greater than or equal to the queue group CL, transmitting the packet (814).

A flow chart for illustrating steps for packet discarding and packet congestion level marking at a voice transmit queue in accordance with the present invention is set forth in FIG. 9,

numeral 900. Voice fast packets are typically not processed at the source edge node by the monitor/enforcer. However, the packet discard priority is typically determined by a speech coding unit, based on the significance of the packet for purposes of reconstruction of the speech signal. For each voice packet to be transmitted, one of the following sets of steps is followed (in accordance with determinations as set forth below):

(A) selecting a packet from a queue of voice packets to be transmitted (902); setting variable PDP equal to a packet discard priority and variable IQL to the instantaneous queue length (904); determining whether IQL is greater than a predetermined voice watermark3 (906)[see step set (B)]; where the IQL is less than or equal to the predetermined voice watermark3, determining whether IQL is greater than a predetermined voice watermark2 and PDP is unequal to Last Discard (908)[see step set (C); where IQL is less than or equal to the predetermined voice watermark2 or PDP is equal to Last Discarded, determining whether IQL is greater than a predetermined voice watermark1 and PDP equals a first discard setting (910)[see step set (D)]; where IQL is less than or equal to the predetermined voice watermark1 or PDP is unequal to First Discarded, determining whether the packet CL is less than the queue group CL (912)[see step set (E); where affirmative, setting the packet CL equal to the queue group CL (914); and transmitting the packet (916);

(B) in step (A) where the IQL is greater than the predetermined voice watermark3, discarding the packet (918); and proceeding to selecting a packet from a queue of voice packets to be transmitted (902) in step (A);

(C) in step (A) where the IQL is greater than the predetermined voice watermark2 and PDP is unequal to last discard, discarding the packet (920); and proceeding to

selecting a packet from a queue of voice packets to be transmitted (902) in step (A);

(D) in step (A) where the IQL is greater than the predetermined voice watermark1, and PDP is equal to first discard, discarding the packet (922); and proceeding to selecting a packet from a queue of voice packets to be transmitted (902) in step (A);

(E) in step (A) where the packet CL is greater than or equal to the queue group CL, transmitting the packet (916).

A flow chart for illustrating steps for updating congestion and tagging status, forward explicit congestion notification (FECN) marking and creation of backward control packet at a destination edge node in accordance with the method of the present invention is set forth in FIG. 10, numeral 1000. For each received outbound packet, one of the following sets of steps is followed (in accordance with determinations as set forth below):

(A) updating the congestion status of the received outbound fast packet (1002); determining whether the fast packet is a first fast packet in the frame (1004)[see step set (B)]; where affirmative, updating a fast packet adaption tagging status (state) (1006); determining whether the outbound packet is congested and tagged, or alternatively, severely congested (1008)[see step set (C)]; where the forward path is uncongested or the packet is untagged, and where the forward path is other than severely congested, determining whether the tagging or congestion status has changed (1010)[see step set (D)]; where the tagging or congestion status has changed, creating and storing a backward congestion code (1012); storing a current tag and congestion status (1014); setting a counter1 to a predetermined number N1 (1016); creating a control packet for a backward direction (1018); and setting a control field for a backward congestion

code and setting the control packet discard priority to Last Discard (1020);

(B) in step (A) where the outbound packet is other than a first packet in the frame, proceeding to the step of determining whether the tagging or congestion status has changed (1010) in step (A);

(C) in step (A) where the forward path is congested and the packet is tagged, or alternatively, the forward path is severely congested, setting a FECN bit in the frame relay frame;

(D) in step (A), where tagging and congestion status are unchanged, determining whether the packet is the first packet in the frame (1024)[see step set (E)]; where the packet is the first packet in the frame, determining whether a counter1 is set to zero (1026); where the counter1 is set to zero, proceeding to the step of setting counter1 to the predetermined number N1 (1016) of step (A);

(E) in step (D) where the packet is other than the first packet in the frame, ending the status determining steps; and

(F) in step (D) where the counter1 is set to other than zero, setting the counter1 to counter1 - 1.

A flow chart for illustrating steps for updating a tag status when receiving a first packet in a frame at a destination edge node in accordance with the method of the present invention is set forth in FIG. 11, numeral 1100. For each first packet in a frame received, one of the following sets of steps is followed (in accordance with determinations as set forth below):

(A) determining whether the fast packet adaption (FPA) state is marked (tagged) (1102)[see step set (B)]; where the FPA is untagged, determining whether a counter2 is set to zero

(1104)[see step set(C)]; where affirmative, setting a current tag status equal to untagged (1106);

(B) where the FPA is tagged, setting the counter2 equal to a predetermined second number N2(1108); and

(C) where the counter2 is greater than 0, decrementing counter2 and, setting the current tag status equal to tagged (1110).

A flow chart for illustrating steps for creating and storing a backward congestion code at a destination edge node in accordance with the method of the present invention is set forth in FIG. 12, numeral 1200. For each packet having a tag or congestion status changed, one of the following sets of steps is followed (in accordance with determinations as set forth below):

(A) determining whether a congestion level (CL) is one of: normal and mild (1202)[see step set (B)]; where CL is other than one of normal and mild, determining whether CL is moderate (1204)[see step set (C)]; where CL is other than one of normal, mild, and moderate, determining whether the tag status (state) is tagged (1206)[see step set (D)]; where the tag status is tagged, setting a backward congestion code equal to severe (1208); storing the backward congestion code (1210);

(B) in step (A) where the congestion level is equal to one of normal and mild, setting the backward congestion code equal to normal (1212) and storing the backward congestion code (1210);

(C) in step (A) where the congestion level is equal to moderate, determining whether the tag status is tagged (1214)[see step set (E); where the tag status is tagged, setting the backward congestion code equal to moderate (1216); and storing the backward congestion code (1210);

(D) in step (A) where the tagged status is untagged, setting the backward congestion code equal to moderate (1216); and storing the backward congestion code (1210);

(E) in step (C) where the tag status is untagged, setting the backward congestion code equal to normal (1212); and storing the backward congestion code (1210).

A flow chart for illustrating steps for receiving a control packet in a backward direction at a source edge node in accordance with the method of the present invention is set forth in FIG. 13, numeral 1300. For each control packet received, one of the following sets of steps is followed (in accordance with determinations as set forth below):

(A) reading a control field of the received control packet (1302); determining whether the control field has changed from a previous backward congestion indication (value)(1304)[see step set (B)]; where affirmative, determining whether the control field is a normal value (1306)[see step set (C)]; where the control field is other than normal, determining whether the control field is a moderate value (1307)[see step set (D)]; where the control field is moderate, setting the backward congestion indication to a moderate indication (1308);

(B) in step (A) where the control field is unchanged from a previous backward congestion indication (value), ceasing taking further steps to set the control field;

(C) in step (A) where the control field is a normal value, setting the backward congestion indication to a normal indication (1310);

and

(D) in step (A) where the control field is other than a normal value and other than a moderate value, setting the backward congestion indication to a severe indication (1312).

A flow chart for illustrating steps for receiving a data fast packet in a backward direction and setting a backward explicit congestion notification (BECN) bit at a source edge node in accordance with the method of the present invention is set forth in FIG. 14, numeral 1400. For each data fast packet received in a backward direction, one of the following sets of steps is followed (in accordance with determinations as set forth below):

(A) determining whether the packet is a first packet in its frame (1402)[see step set (B)]; where the packet is a first packet in its frame, determining whether the backward congestion indication is equal to normal (1404)[see step set (C)]; where the backward congestion indication is equal to normal, ceasing taking further steps to set BECN;

(B) in step (A) where the packet is other than a first packet in its frame, ceasing taking further steps to set the BECN bit;

and

(C) in step (A) where the backward congestion indication is indicated as other than normal, setting the frame relay BECN bit to a set state (1406).

Thus, FIG. 15 , numeral 1500, shows the steps of the method of the present invention for providing rate-based congestion control in an integrated fast packet traffic network, each packet having at least a two bit congestion level field and a predetermined throughput rate, comprises at least the steps of: rate-based monitoring and rate enforcing the traffic utilizing a monitor/enforcer that provides a fast packet discard priority (1502), providing, at a plurality of intermediate nodes, fast packet transmission paths (1504), and providing at least a correlated congestion level and for outputting reassembled frames of transmitted fast packets at a realized throughput rate (1506), such that the realized

throughput rate of the transmitted fast packets may exceed the predetermined throughput rate where the fast packets utilize available network capacity.

In a second embodiment, a system carrying transparent framed traffic utilizes the method of the present invention. In this embodiment, the same function is provided as described above, except that the access interface does not support FECN or BECN. That is, the congestion control will still be closed loop, but will have no way of informing the source or destination to slow its rate.

In a third embodiment, a system carries point-to-point simplex traffic, or alternatively, point-to-multipoint simplex traffic. In this embodiment there is no reverse path to close the feedback loop. Here, the leaky bucket continues to lower the fast packet discard priority and to discard entire frames, but now does so in an open-loop fashion. The excess rate parameter, R2, is used to switch the leaky bucket to a discard mode. As indicated above, conceptually, there are two leaky buckets, the first being used to lower the fast packet discard priority where R is exceeded, and the second being used to discard frames at the source edge where R + R2 is exceeded. In the point-to-point embodiment, the leaky bucket operates identically to that of the frame relay service described above.

Obviously numerous modification and variations of the present invention are possible in light of the above teachings. It is therefore to be understood that within the scope of the appended claims, the invention may be practiced otherwise than as specifically described herein.

~~We claim:~~

AUSTRALIAN PATENT OFFICE LS

THE CLAIMS DEFINING THE INVENTION ARE AS FOLLOWS:

1. A system for providing rate-based congestion control in an integrated fast packet network, each packet being capable of conveying a plurality of levels of congestion indication, including at least:

source edge node means, operably coupled to receive the fast packet traffic for transmission over the network, said means having a predetermined negotiated throughput rate, for rate-based monitoring and rate enforcement of the traffic utilizing a monitor/enforcer means,

transit node means, operably coupled to the source edge node means, having a plurality of intermediate nodes for providing at said nodes fast packet transmission paths, and

destination edge node means, operably coupled to the transit node means, for providing at least a correlated congestion level and for outputting traffic at a realized throughput rate, such that the realized throughput rate of the transmitted fast packets may exceed the predetermined negotiated throughput rate where the fast packets utilize unallocated or unused network capacity,

wherein the monitor/enforcer means further provides a fast packet discard priority and

wherein the transit node means further includes at least congestion-reducing means for determining a transit node queue group (TNQG) congestion level for fast packets and for discarding fast packets based on said TNQG congestion level and on said discard priority.

2. The system of claim 1 wherein the means for determining a transit node queue group (TNQG) congestion level and for discarding fast packets based on said TNQG on said discard priority incorporates hysteresis for state transitions.

3. The system of claim 1 wherein the monitor/enforcer means that provides a fast packet discard priority comprises at least a leaky bucket monitor/enforcer or equivalent means for at least determining and marking a fast packet discard priority such that, when a frame is received in excess of a first previously negotiated throughput rate R and a first previously negotiated bucket size B, the discard priority of the first fast packet comprising said frame is set to 'last discarded' and the discard priority of subsequent fast packets is set to 'first discarded'.

4. The system of claim 3, further including means for, when a frame is received in excess of a second previously negotiated throughput rate R2 and a second previously negotiated bucket size B2, discarding said frame.

5. The system of claim 1, wherein the transit node means further includes a low pass filter for providing a measurement that allows congestion determination of a particular queue.

6. The system of claim 5, wherein the measurement that allows congestion determination of the particular queue is obtained by averaging the sampled queue depth that is input from a queue depth sampler.

7. The system of claim 1 wherein the congestion level field is two bits or an equivalent of two bits.

8. The system of claim 1, further including a backwards correlated congestion level state determiner (BCCL STATE DET), operably coupled to the destination edge node means, for providing a backwards correlated congestion level (BCCL) state to the leaky bucket monitor/enforcer means via a control fast packet.

9. The system of claim 8, further including a frame relay backwards explicit congestion notification (BECN) marking unit, operably coupled to the BCCL STATE DET, for setting a BECN bit when the backward correlated congestion level is equal to or greater than a predetermined congestion level.

10. The system of claim 8, further including a means for discarding fast packets when the BCCL state is greater than a predetermined congestion value.

11. The system of claim 1 wherein the destination edge node means comprises at least:

a connection CL state determiner, operably coupled to the transit node means, for determining a connection congestion level (CL) state;

a fast packet adaption (FPA) frame tag state determiner, operably coupled to the transit node means, for determining a FPA frame tag state;

a correlated CL determiner, operably coupled to the connection CL state determiner and to the FPA frame tag state determiner, for utilizing the CL state and the FPA frame tag state to determine a correlated congestion level that provides a backward correlated congestion level (BCCL) state to a BCCL signal unit that is operably coupled to provide a BCCL state indication to the source edge node means and that further provides a forward correlated congestion level (FCCL) to a FCCL state determiner.

12. The system of claim 11 wherein the FCCL state determiner is further operably coupled to provide a frame relay forward explicit congestion notification (FECN) to a frame relay FECN marking unit that outputs the reassembled frames of transmitted fast packets.

AUSTRALIAN PATENT OFFICE LS

13. A system for providing rate-based congestion control in an integrated fast packet network, each packet being capable of conveying a plurality of levels of congestion indication, including at least:

source edge node means, operably coupled to receive the fast packet traffic for transmission over the network, said means having a first predetermined negotiated throughput rate R and a first previously negotiated bucket size B, for rate-based monitoring and rate enforcement of the traffic utilizing a leaky bucket monitor/enforcer means for at least determining and marking a fast packet discard priority such that, when a frame is received in excess of said rate R and said bucket size B, the discard priority of the first fast packet comprising said frame is set to 'last discarded' and the discard priority of subsequent fast packets is set to 'first discarded', except that if the BCCL state detection unit indicates that congestion along the path exceeds a predetermined level, the frame is discarded and a control fast packet is sent, or if a second predetermined negotiated excess throughput rate R2 and a second previously negotiated excess bucket size B2 is exceeded, the frame is discarded,

transit node means, operably coupled to the source edge node means, having a plurality of intermediate nodes for providing at said nodes fast packet transmission paths utilizing congestion-reducing means for determining a transit node queue group (TNQG) congestion level for fast packets and for discarding fast packets based on said TNQG congestion level and on said discard priority, and

destination edge node means, operably coupled to the transit node means, for providing at least a correlated congestion level and for outputting reassembled frames of transmitted fast packets at a realized throughput rate,

such that the realized throughput rate of the transmitted fast packets may exceed the first predetermined negotiated

AUSTRALIAN PATENT OFFICE LS

throughput rate where the fast packets utilize unused or unallocated network capacity,

further including a backwards correlated congestion level state determiner (BCCL STATE DET), operably coupled to the destination edge node means, for providing a backwards correlated congestion level (BCCL) state to the leaky bucket monitor/enforcer means via a control fast packet.

14. The system of claim 13 further including a frame relay backwards explicit congestion notification (BECN) marking unit, operably coupled to the BCCL STATE DET, for setting a BECN bit when the backward correlated congestion level is equal to or greater than a predetermined congestion level.

15. The system of claim 13, further including a low pass filter, operably coupled to the congestion-reducing means, for averaging a sampled queue depth that is input from a queue depth sampler.

16. The system of claim 13 wherein the destination edge node means comprises at least:

a connection CL state determiner, operably coupled to the transit node means, for determining a connection congestion level (CL) state;

a fast packet adaption (FPA) frame tag state determiner, operably coupled to the source edge node means, for determining a FPA frame tag state;

a correlated CL determiner, operably coupled to the connection CL state determiner and to the FPA frame tag state determiner, for utilizing the CL state and the FPA frame tag state to determine a correlated congestion level that provides a backward correlated congestion level (BCCL) state to a BCCL signal unit that is operably coupled to provide a BCCL state indication to the source edge node means and that further

AUSTRALIAN PATENT OFFICE LS

provides a forward correlated congestion level (FCCL) to a FCCL state determiner .

17. The system of claim 16 wherein the FCCL state determiner is further operably coupled to provide a frame relay forward explicit congestion notification (FECN) to a frame relay FECN marking unit that outputs the reassembled frames of transmitted fast packets.

18. A method for providing rate-based congestion control in an integrated fast packet network, each packet being capable of conveying a plurality of levels of congestion indication, including at least the steps of:

receiving, at a source edge, the fast packet traffic for transmission over the network utilizing a predetermined negotiated throughput rate, providing rate-based monitoring and rate enforcing the traffic utilizing a monitor/enforcer,

providing, at a plurality of intermediate transit nodes, fast packet transmission paths, and

providing, at a destination edge node, at least a correlated congestion level and for outputting reassembled frames of transmitted fast packets at a realized throughput rate,

such that the realized throughput rate of the transmitted fast packets may exceed a predetermined negotiated throughput rate where the fast packets utilize unused or unallocated network capacity.

19. The method of claim 18 wherein the congestion level field is two bits or an equivalent of two bits.

20. The method of claim 18 further including the step of utilizing the monitor/enforcer for providing a fast packet discard priority.

21. The method of claim 18 wherein utilizing the monitor/enforcer that provides a fast packet discard priority comprises at least the steps of utilizing a leaky bucket monitor/enforcer for at least determining and marking a fast packet discard priority such that when a frame is received in excess of a first predetermined negotiated throughput rate R, the discard priority of the first fast packet comprising said frame is set to Last discard and the discard priority of subsequent fast packets is set to First discard.

22. The method of claim 21 wherein the leaky bucket and discard priority marking, upon receiving a fast packet, utilize one of the following sets of steps:

(A) determining whether the fast packet is a first packet in a frame [see also step set (22B)]; where affirmative, updating the leaky bucket queue length Q and setting a first clock; determining whether the discard eligibility (DE) bit is set in the frame relay frame [see step set (22G)]; where DE is unset, determining whether Q > B [see step set (22F)]; where affirmative, updating leaky bucket 2 with queue length Q2 and setting a second clock; determining whether Q2 is greater than a second preselected maximum allocation (bucket size) B2[see step set (22H)]; where Q2 ≤ B2, unsetting an excess indication; determining a number of bits (K) in the fast packet and updating Q2 such that Q2 = Q2 + K; setting frame mark indication; determining whether a severe congestion level (greater than or equal to a predetermined congestion level) is set [see step set (22I)]; where severe congestion indication is

unset, tagging (marking) an FPA frame state; setting a discard priority to Last Discarded; and transmitting the fast packet;

(B) where the fast packet is other than the first packet in the frame, determining whether excess indication is set [see also step set (22C)]; and where excess indication is set, and discarding the fast packet;

(C) where excess indication is unset, determining whether a frame mark indication is set [see step set (22D)]; where the frame mark indication is set, determining whether severe congestion indication is set [see step set (22E)]; where the severe congestion indication is set, and discarding the fast packet;

(D) where the frame mark indication is unset, determining the number of bits (K) in the packet; updating Q such that Q=Q + K ; setting a discard priority to Last Discarded; and transmitting the fast packet;

(E) where the severe congestion level indication is unset, determining the number of bits (K) in the packet; updating Q2 such that Q2=Q2 + K; setting a discard priority to First Discarded; and transmitting the fast packet;

(F) where $Q \leq B$, unsetting the frame mark indication; determining the number of bits (K) in the packet; updating Q such that Q=Q + K; setting a discard priority to Last Discarded; and transmitting the fast packet;

(G) where the DE bit is set (typically to 1), bypassing the step of determining whether $Q > B$ in (22A) above, and otherwise proceeding as set forth in step (22A);

(H) where $Q2 > B2$, setting an excess indication; and discarding the fast packet;

and

(I) where a severe congestion level indication is set, discarding the fast packet; creating an empty packet; tagging (marking) an FPA frame state; setting a discard priority to Last Discarded; and transmitting the fast packet.

AUSTRALIAN PATENT OFFICE LS

23. The method of claim 24, further including the step of providing a backwards correlated congestion level (BCCL) state to the leaky bucket monitor/enforcer.

24. The method of claim 23 further including the step of setting a backward explicit congestion notification (BECN) bit when the backward correlated congestion level is equal to or greater than a predetermined congestion level.

25. The method of claim 18 wherein the step of providing a plurality of intermediate nodes, fast packet transmission paths includes at least utilizing a congestion-reducing unit for determining a transit node queue group (TNQG) congestion level for fast packets and for discarding fast packets based on said TNQG congestion level and on said discard priority.

26. The method of claim 25 wherein steps for determining a transit node queue group congestion level includes sampling a transit queue group for congestion levels such that one of the following sets of steps is executed (in accordance with determinations as set forth below):

(A) reading (sampling) a queue length from a transit queue; updating an averaged (i.e., filtered) queue length for the transit queue; determining whether an average queue length is greater than a first predetermined threshold1 [see step set (26B)]; where affirmative, determining whether the average queue length is greater than a second predetermined threshold2 [see step set (26C)]; where affirmative, determining whether the average queue length is greater than a third predetermined threshold3 [see step set (26D); where affirmative, setting the congestion level for the queue to severe; determining whether all queues in a selected group have been sampled [see step set (26E)]; and, where affirmative, determining whether the queue group congestion level (CL) is

AUSTRALIAN PATENT OFFICE LS

greater than a predetermined maximum congestion level in the queue group [see step set (26F);

(B) in step (26A) where the average queue length is less than or equal to the threshold1, setting the CL to normal and proceeding to the step of determining whether all queues in the selected group have been sampled in step (26A);

(C) in step (26A) where the average queue length is less than or equal to the threshold2, setting the CL to mild and proceeding to the step of determining whether all queues in the selected group have been sampled in step (26A);

(D) in step (26A) where the average queue length is less than or equal to the threshold3, setting the CL to moderate and proceeding to the step of determining whether all queues in the selected group have been sampled in step (26A);

(E) in step (26A) where at least one queue in the selected group is unsampled, proceeding to the step of reading a queue length from a transit queue in step (26A); and

(F) in step (26A), where the previous value of the queue group congestion level (CL) is less than the greatest congestion level of any queue in the queue group, or if the congestion levels of all queues in the queue group are 'normal', setting the queue group congestion level to the greatest congestion level of any queue in the queue group. Otherwise, the queue group CL is unchanged.

27. The method of claim 18 wherein the step of providing at least a correlated congestion level and for outputting reassembled frames of transmitted fast packets at a realized throughput rate comprises at least the steps of:

determining a connection congestion level (CL) state;

determining a fast packet adaption (FPA) frame tag state;

AUSTRALIAN PATENT OFFICE LS

utilizing the CL state and the FPA frame tag state to determine a correlated congestion level,

providing a backward correlated congestion level (BCCL) state to a BCCL signal unit, and

providing a forward correlated congestion level (FCCL) to a FCCL state determiner.

28. The method of claim 27 further including the step of providing a frame relay forward explicit congestion notification (FECN) to a frame relay FECN marking unit that outputs the reassembled frames of transmitted fast packets.

29. The method of claim 18 further including packet discarding and congestion level marking for data packets such that, for each data packet to be transmitted, one of the following sets of steps is followed at an intermediate node (in accordance with determinations as set forth below):

(A) selecting a packet from a queue of data packets to be transmitted; determining whether an instantaneous queue length is less than a predetermined high discard level [see step set (29B)]; where affirmative, determining whether the queue group congestion level (CL) is severe, or alternatively, whether the instantaneous queue length is greater than a predetermined low discard level [see step set (29C); where affirmative, determining whether the discard priority is Last Discarded [see step set (29D)]; where affirmative, determining whether the packet CL is less than the queue group CL [see step set (29E); where affirmative, setting the packet CL equal to the queue group CL; and transmitting the packet;

(B) in step (29A) where the instantaneous queue length is greater than or equal to the predetermined high discard level, discarding the packet; and proceeding to select another packet from a queue of data packets to be transmitted in step (29A);



(C) in step (29A) where the queue group congestion level (CL) is other than severe and the instantaneous queue length is less than or equal to a predetermined low discard level, proceeding to determining whether the packet CL is less than the queue group CL in step (29A);

(D) in step (29A) where the discard priority is other than the Last Discarded, discarding the packet; and proceeding to select another packet from a queue of data packets to be transmitted in step (29A);

and

(E) in step (29A) where the packet CL is greater than or equal to the queue group CL, transmitting the packet.

30. The method of claim 18 further including packet discarding and congestion level marking at a voice transmit queue such that, for each voice packet to be transmitted, one of the following sets of steps is followed (in accordance with determinations as set forth below):

(A) selecting a packet from a queue of voice packets to be transmitted; setting variable PDP equal to a packet discard priority that is determined by a speech coding unit and variable IQL to an instantaneous queue length; determining whether IQL is greater than a predetermined voice watermark3 [see step set (30B)]; where the IQL is less than or equal to the predetermined voice watermark3, determining whether IQL is greater than a predetermined voice watermark2 and PDP is unequal to Last Discard [see step set (30C); where IQL is less than or equal to the predetermined voice watermark2 or PDP is equal to Last Discarded, determining whether IQL is greater than a predetermined voice watermark1 and PDP equals a first discard setting [see step set (30D)]; where IQL is less than or equal to the predetermined voice watermark1 or PDP is unequal to First Discarded, determining whether the packet CL is less than the queue group CL [see step set (30E); where affirmative, setting the packet CL equal to the queue group CL;

AUSTRALIAN PATENT OFFICE LS

and transmitting the packet, where predetermined voice watermark1 ≤ predetermined voice watermark2 ≤ predetermined voice watermark3;

(B) in step (30A) where the IQL is greater than the predetermined voice watermark3, discarding the packet; and proceeding to selecting a packet from a queue of voice packets to be transmitted in step (30A);

(C) in step (30A) where the IQL is greater than the predetermined voice watermark2 and PDP is unequal to Last Discard, discarding the packet; and proceeding to selecting a packet from a queue of voice packets to be transmitted in step (30A);

(D) in step (30A) where the IQL is greater than the predetermined voice watermark1 and PDP equals to the first discard, discarding the packet; and proceeding to selecting a packet from a queue of voice packets to be transmitted in step (30A);

(E) in step (30A) where the packet CL is greater than or equal to the queue group CL, transmitting the packet.

31. The method of claim 18 wherein the step of providing at least a correlated congestion level and outputting reassembled frames of transmitted fast packets further includes steps for updating congestion and tagging status, forward explicit congestion notification (FECN) marking and creation of backward control packet at a destination edge node such that, for each received outbound packet, one of the following sets of steps is followed (in accordance with determinations as set forth below):

(A) updating the congestion status of the received outbound packet; determining whether the packet is a first packet in the frame [see step set (31B)]; where affirmative, updating a fast packet adaption tagging status (state);

AUSTRALIAN PATENT OFFICE LS

determining whether the forward path is congested and tagged, or alternatively, severely congested [see step set (31C)]; where the forward path is other than congested or the packet is untagged, and the forward path is other than severely congested, determining whether the tagging or congestion status has changed [see step set (31D)]; where the tagging or congestion status has changed, creating and storing a backward congestion code; storing a current tag and congestion status; setting a counter1 to a predetermined number N1; creating a control packet for a backward direction; and setting a control field for a backward congestion code and setting the control packet discard priority to Last Discard;

(B) in step (31A) where the outbound packet is other than a first packet in the frame, proceeding to the step of determining whether the tagging or congestion status has changed in step (31A);

(C) in step (31A) where the forward path is congested and the packet is tagged, or alternatively, the forward path is severely congested, setting a FECN bit in the frame relay frame;

(D) in step (31C) where tagging and congestion status are unchanged, determining whether the packet is the first packet in the frame [see step set (31E)]; where the packet is the first packet in the frame, determining whether the counter1 is set to zero; where the counter1 is set to zero, proceeding to the step of setting counter1 to the predetermined number N1 of step (31A);

(E) in step (31D) where the packet is other than the first packet in the frame, ending the status determining steps; and

(F) in step (31D) where the counter1 is set to other than zero, setting the counter1 to counter1 - 1.

32. The method of claim 18 wherein the step of providing at least a correlated congestion level and outputting reassembled

AUSTRALIAN PATENT OFFICE LS

frames of transmitted fast packets further includes steps for updating a tag status when receiving a first packet in a frame at a destination edge node such that, for each first packet in a frame received, one of the following sets of steps is followed (in accordance with determinations as set forth below):

(A) determining whether the fast packet adaption (FPA) state is marked (tagged)[see step set (32B)]; where the FPA is untagged, determining whether a counter2 is set to zero [see step set(32C)]; where affirmative, setting a current tag status equal to untagged ;

(B) where the FPA is tagged, setting the counter2 equal to a predetermined second number N2;

and

(C) where the counter2 is greater than zero, decrementing counter2, setting the current tag status equal to tagged.

33. The method of claim 18 where the step of providing at least a correlated congestion level and outputting reassembled frames of transmitted fast packets further includes steps for creating and storing a backward congestion code at a destination edge node such that, for each packet having a tag or congestion status changed, one of the following sets of steps is followed (in accordance with determinations as set forth below):

(A) determining whether a congestion level (CL) is one of: normal and mild [see step set (33B)]; where CL is other than one of normal and mild, determining whether CL is moderate [see step set (33C)]; where CL is other than one of normal, mild, and moderate, determining whether the tag status (state) is tagged [see step set (33D)]; where the tag status is tagged, setting a backward congestion code equal to severe; storing the backward congestion code;



(B) in step (33A) where the congestion level is equal to one of normal and mild, setting the backward congestion code equal to normal and storing the backward congestin code;

(C) in step (33A) where the congestion level is equal to moderate, determining whether the tag status is tagged [see step set (33E); where the tag status is tagged, setting the backward congestion code equal to moderate; and storing the backward congestion code;

(D) in step (33A) where the tagged status is untagged, setting the backward congestion code equal to moderate; and storing the backward congestion code;

(E) in step (33C) where the tag status is untagged, setting the backward congestion code equal to normal; and storing the backward congestion code.

34. The method of claim 18 wherein the rate monitoring/enforcing of traffic utilizing a monitor/enforcer further includes steps for receiving a control packet in a backward direction at a source edge node such that for each control packet received, one of the following sets of steps is followed (in accordance with determinations as set forth below):

(A) reading (sampling) a control field of the received control packet; determining whether the control field has changed from a previous backward congestion indication (value)[see step set (34B)]; where affirmative, determining whether the control field is a normal value [see step set (34C)]; where the control field is other than normal, determining whether the control field is a moderate value [see step set (34D)]; where the control field is moderate, setting the control field to a moderate indication;

(B) in step (34A) where the backward congestion indication (value) is unchanged, ceasing taking further steps to set the control field;

AUSTRALIAN PATENT OFFICE LS

(C) in step (34A) where the control field is a normal value, setting the backward congestion indication to a normal indication;

and

(D) in step (34A) where the control field is other than a normal value and other than a moderate value, setting the control field to a severe indication.

35. The method of claim 18 wherein the rate monitoring/enforcing of traffic utilizing a monitor/enforcer further includes steps for receiving a data fast packet in a backward direction and setting a backward explicit congestion notification (BECN) at a source edge node such that, for each control packet received in a backward direction, one of the following sets of steps is followed (in accordance with determinations as set forth below):

(A) determining whether the packet is a first fast packet in its frame [see step set (35B)]; where the fast packet is a first fast packet in its frame, determining whether a backward congestion indication is equal to normal [see step set (35C)]; where backward congestion indication is equal to normal, ceasing taking steps to set BECN;

(B) in step (35A) where the fast packet is other than a first fast packet in its frame, ceasing taking further steps to set the BECN;

and

(C) in step (35A) where the backward congestion indication is indicated as other than normal, setting the frame relay BECN to a set state.

AUSTRALIAN PATENT OFFICE LS

36. A system for providing rate-based congestion control in an integrated first packet network substantially as herein described with reference to the accompanying drawings.

37. A method for providing rate-based congestion control in an integrated fast packet network substantially as herein described with reference to the accompanying drawings.

DATED: 11 April 1994.

PHILLIPS ORMONDE & FITZPATRICK
Attorneys for:
CODEX CORPORATION

David B Fitzpatrick

6178u

AUSTRALIAN PATENT OFFICE LS MJ

FIG.1

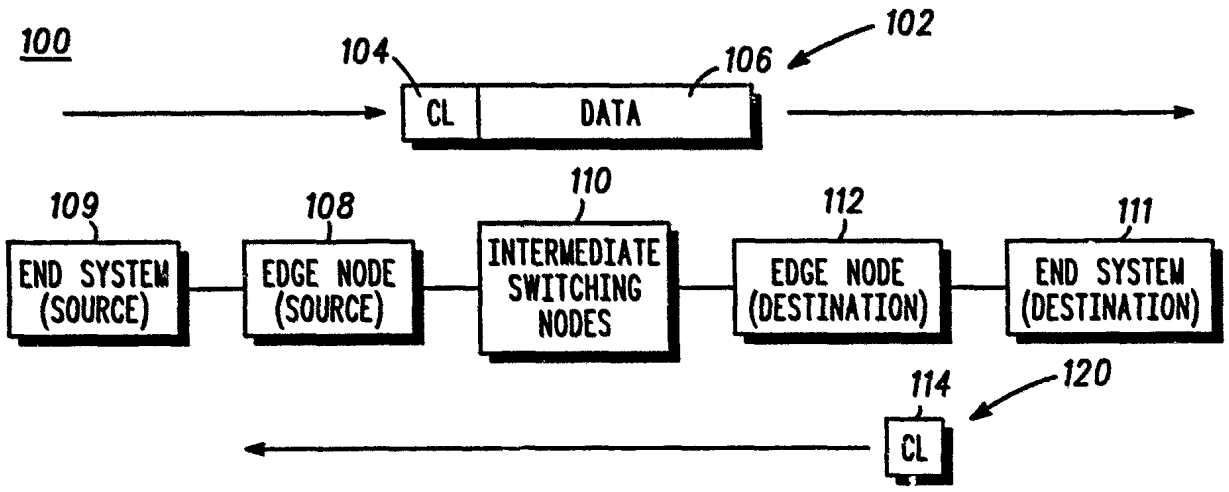

FIG.2

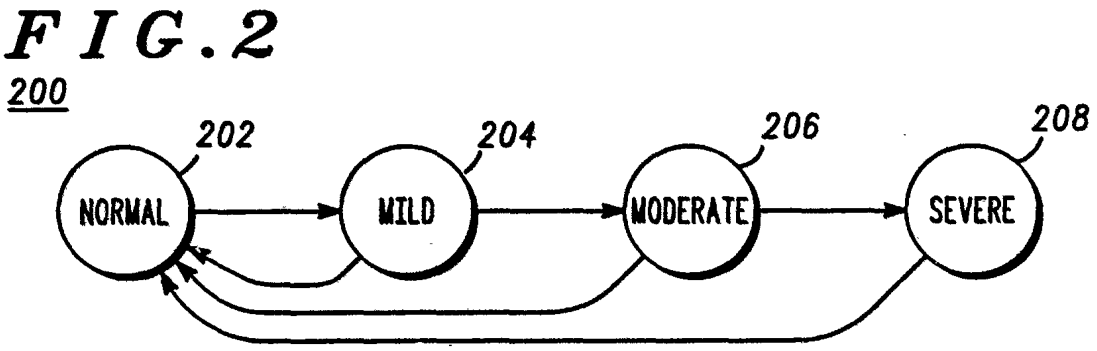

FIG.4

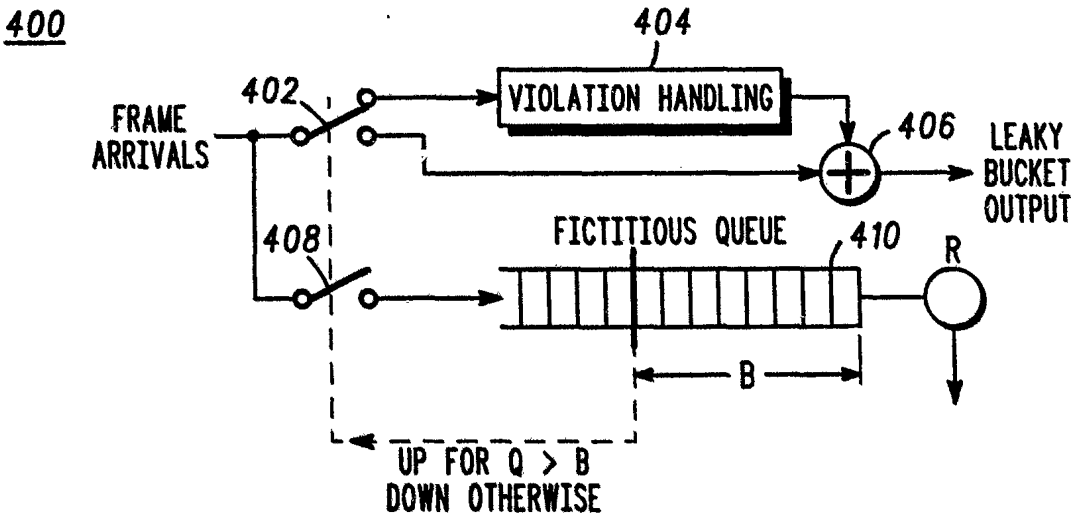

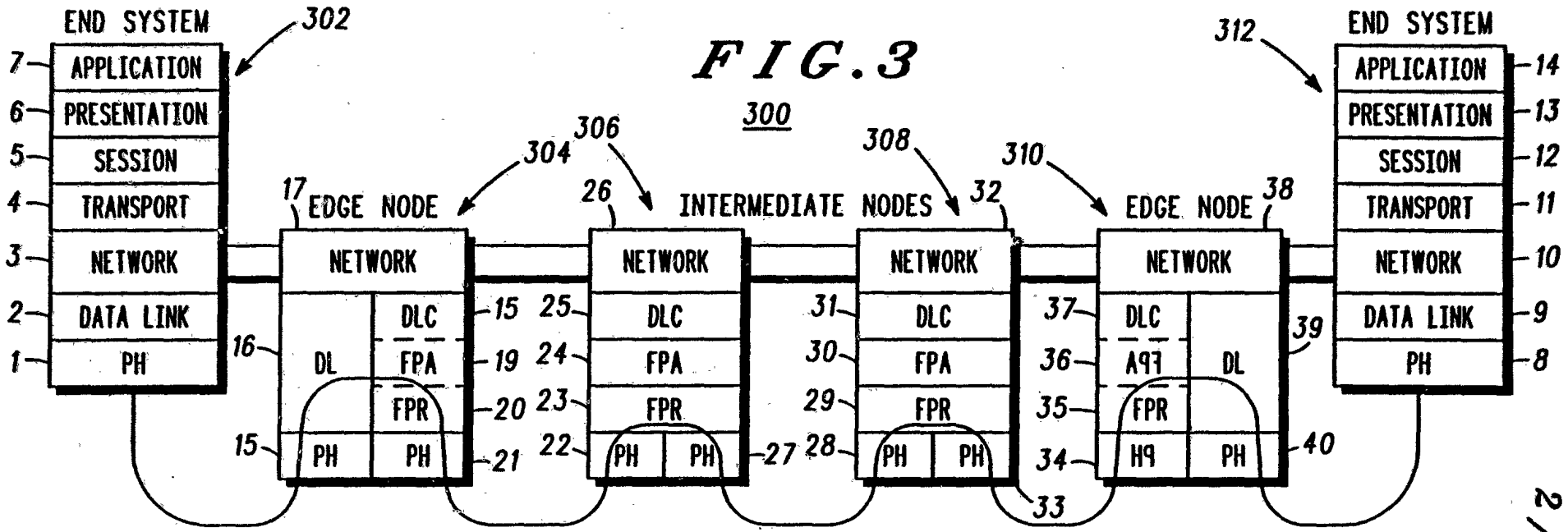
END SYSTEM
302
APPLICATION
PRESENTATION
SESSION
TRANSPORT
NETWORK
DATA LINK
PH
7
6
5
4
3
2
1
300
304
306
308
310
312
17
EDGE NODE
26
INTERMEDIATE NODES
32
EDGE NODE
38
NETWORK
DLC
DL
FPA
FPR
PH
15
16
19
20
21
22
23
24
25
27
28
29
30
31
33
34
35
36
37
39
40
A99
H9
END SYSTEM
14
13
12
11
10
9
8

FIG. 3

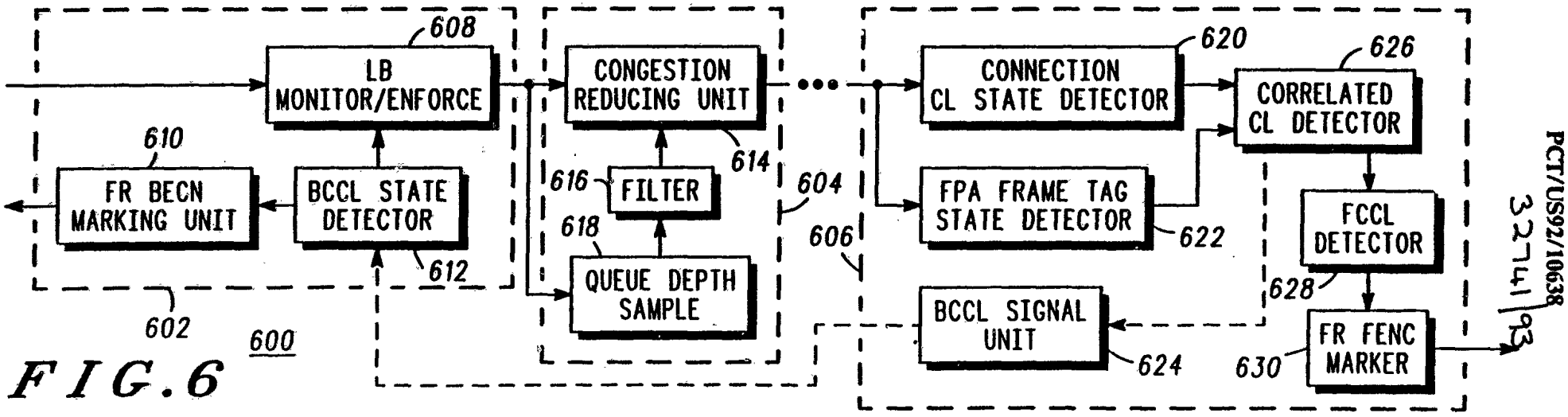
608
LB
MONITOR/ENFORCE
CONGESTION
REDUCING UNIT
614
610
FR BECN
MARKING UNIT
BCCL STATE
DETECTOR
612
616
FILTER
618
QUEUE DEPTH
SAMPLE
602
600
604
606
620
CONNECTION
CL STATE DETECTOR
626
CORRELATED
CL DETECTOR
FPA FRAME TAG
STATE DETECTOR
622
FCCL
DETECTOR
628
BCCL SIGNAL
UNIT
624
630
FR FENC
MARKER

FIG. 6

FIG. 5-1

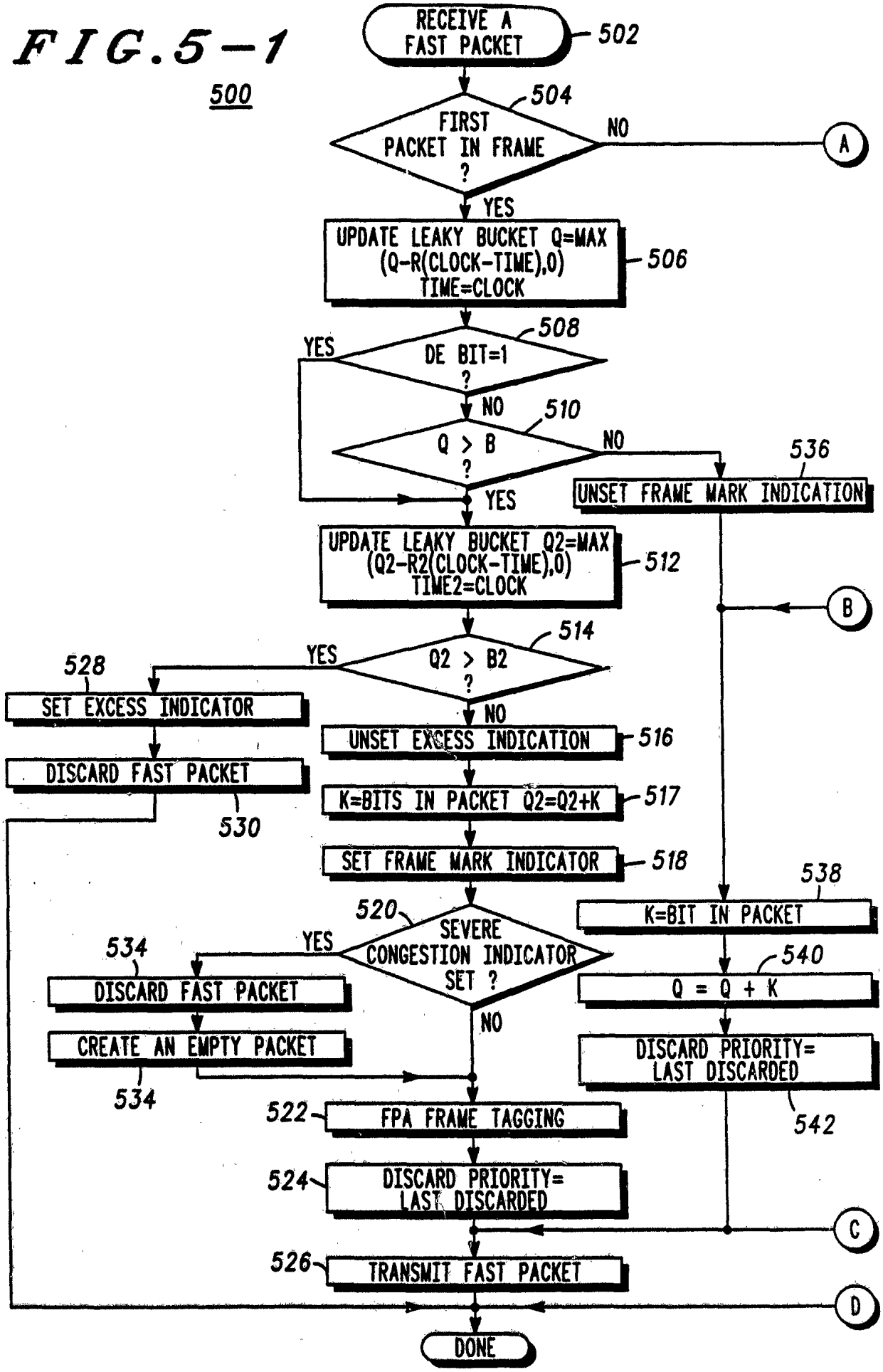
500
RECEIVE A FAST PACKET
502
FIRST PACKET IN FRAME ?
504
NO
A
YES
UPDATE LEAKY BUCKET Q=MAX (Q-R(CLOCK-TIME),0) TIME=CLOCK
506
DE BIT=1 ?
508
YES
NO
Q > B ?
510
NO
536
UNSET FRAME MARK INDICATION
YES
UPDATE LEAKY BUCKET Q2=MAX (Q2-R2(CLOCK-TIME),0) TIME2=CLOCK
512
B
Q2 > B2 ?
514
YES
528
SET EXCESS INDICATOR
NO
UNSET EXCESS INDICATION
516
DISCARD FAST PACKET
530
K=BITS IN PACKET Q2=Q2+K
517
SET FRAME MARK INDICATOR
518
538
K=BIT IN PACKET
520
SEVERE CONGESTION INDICATOR SET ?
YES
534
DISCARD FAST PACKET
CREATE AN EMPTY PACKET
534
NO
540
Q = Q + K
DISCARD PRIORITY= LAST DISCARDED
542
522
FPA FRAME TAGGING
524
DISCARD PRIORITY= LAST DISCARDED
C
526
TRANSMIT FAST PACKET
D
DONE

FIG.5-2

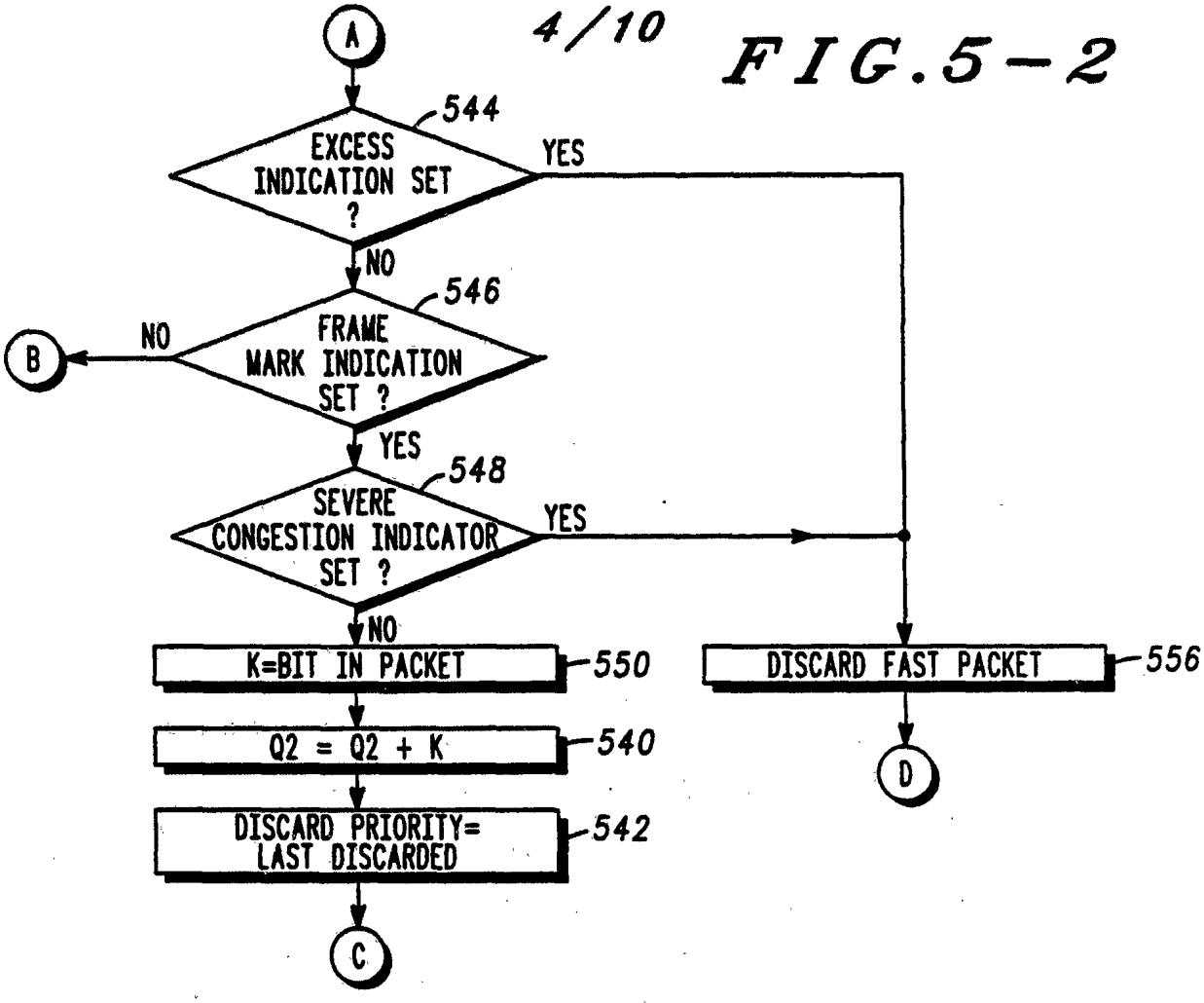
A
544
EXCESS INDICATION SET ?
YES
NO
546
FRAME MARK INDICATION SET ?
NO
B
YES
548
SEVERE CONGESTION INDICATOR SET ?
YES
NO
K=BIT IN PACKET
550
Q2 = Q2 + K
540
DISCARD PRIORITY= LAST DISCARDED
542
C
DISCARD FAST PACKET
556
D

FIG.11

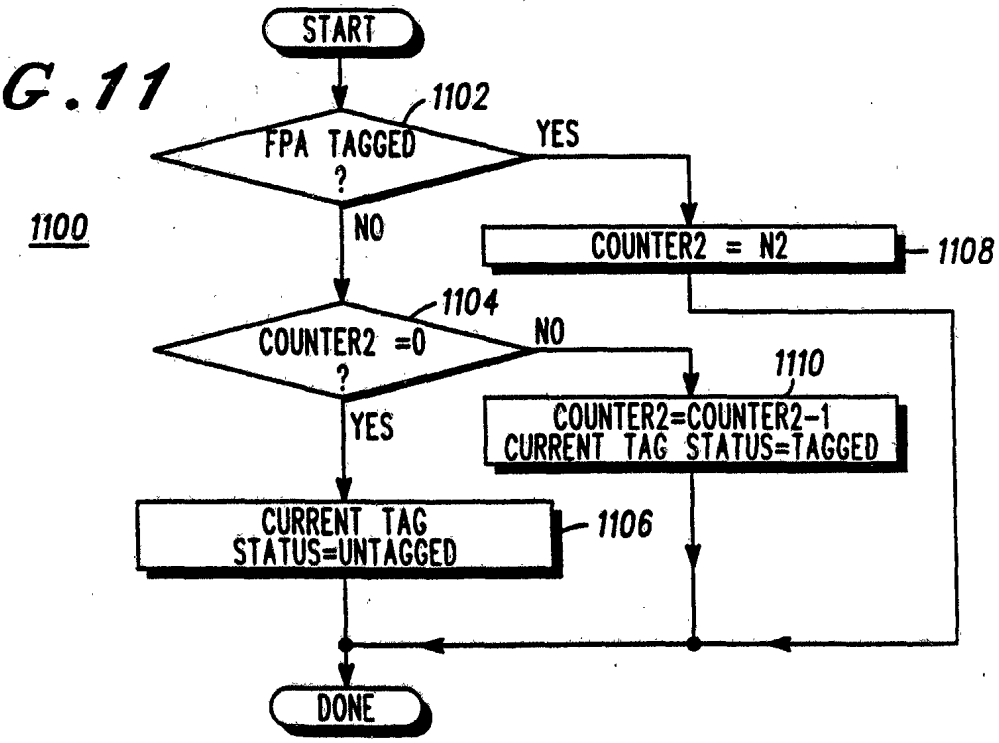
1100
START
1102
FPA TAGGED ?
YES
NO
COUNTER2 = N2
1108
1104
COUNTER2 =0 ?
NO
YES
1110
COUNTER2=COUNTER2-1
CURRENT TAG STATUS=TAGGED
CURRENT TAG STATUS=UNTAGGED
1106
DONE

FIG.7

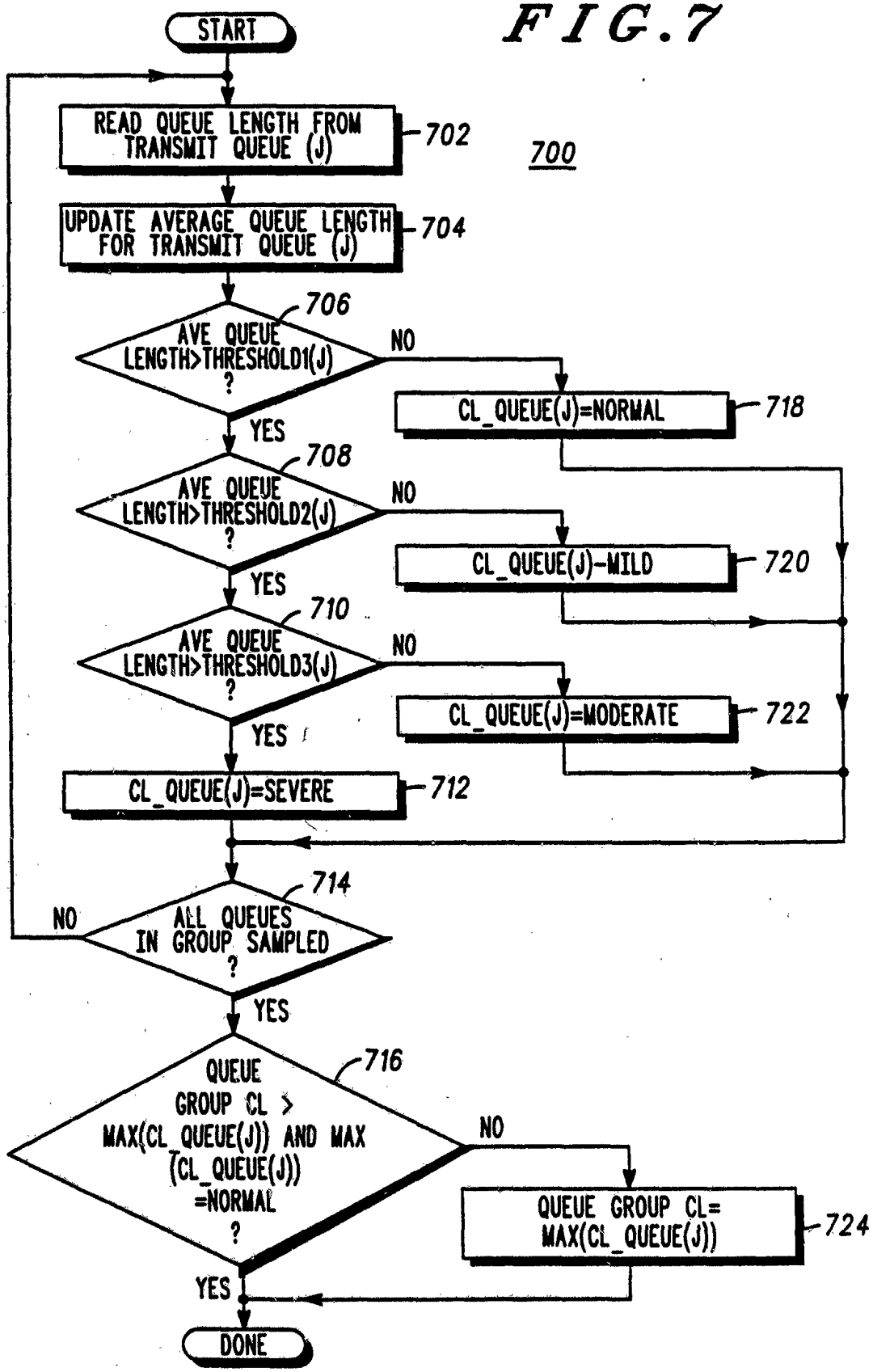
START
READ QUEUE LENGTH FROM TRANSMIT QUEUE (J)
702
700
UPDATE AVERAGE QUEUE LENGTH FOR TRANSMIT QUEUE (J)
704
706
AVE QUEUE LENGTH>THRESHOLD1(J) ?
NO
CL_QUEUE(J)=NORMAL
718
YES
708
AVE QUEUE LENGTH>THRESHOLD2(J) ?
NO
CL_QUEUE(J)-MILD
720
YES
710
AVE QUEUE LENGTH>THRESHOLD3(J) ?
NO
CL_QUEUE(J)=MODERATE
722
YES
CL_QUEUE(J)=SEVERE
712
714
NO
ALL QUEUES IN GROUP SAMPLED ?
YES
716
QUEUE GROUP CL > MAX(CL_QUEUE(J)) AND MAX (CL_QUEUE(J)) =NORMAL ?
NO
QUEUE GROUP CL= MAX(CL_QUEUE(J))
724
YES
DONE

FIG. 8

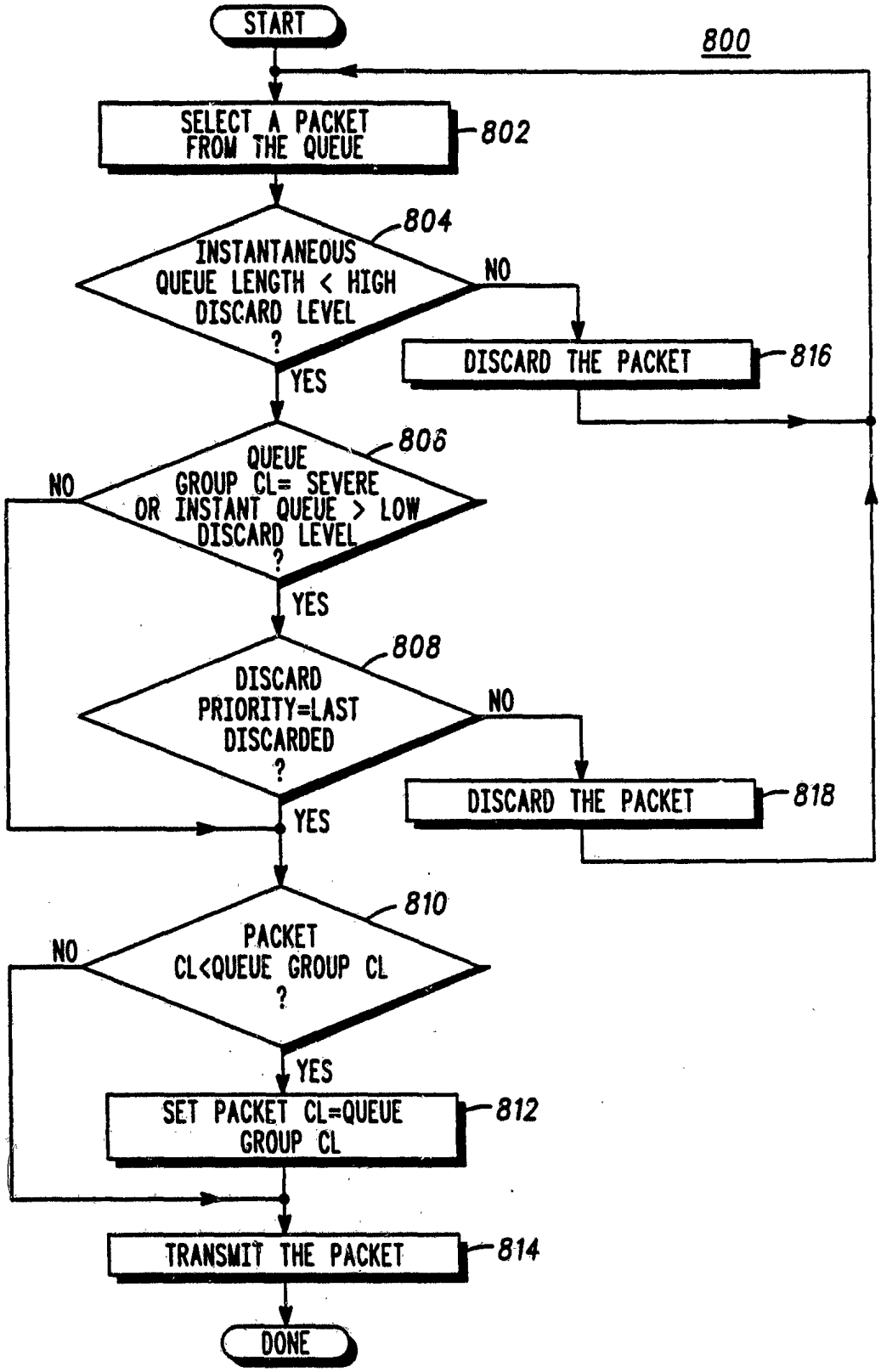
START
800
SELECT A PACKET FROM THE QUEUE
802
INSTANTANEOUS QUEUE LENGTH < HIGH DISCARD LEVEL ?
804
NO
DISCARD THE PACKET
816
YES
QUEUE GROUP CL= SEVERE OR INSTANT QUEUE > LOW DISCARD LEVEL ?
806
NO
YES
DISCARD PRIORITY=LAST DISCARDED ?
808
NO
DISCARD THE PACKET
818
YES
PACKET CL<QUEUE GROUP CL ?
810
NO
YES
SET PACKET CL=QUEUE GROUP CL
812
TRANSMIT THE PACKET
814
DONE

FIG.9

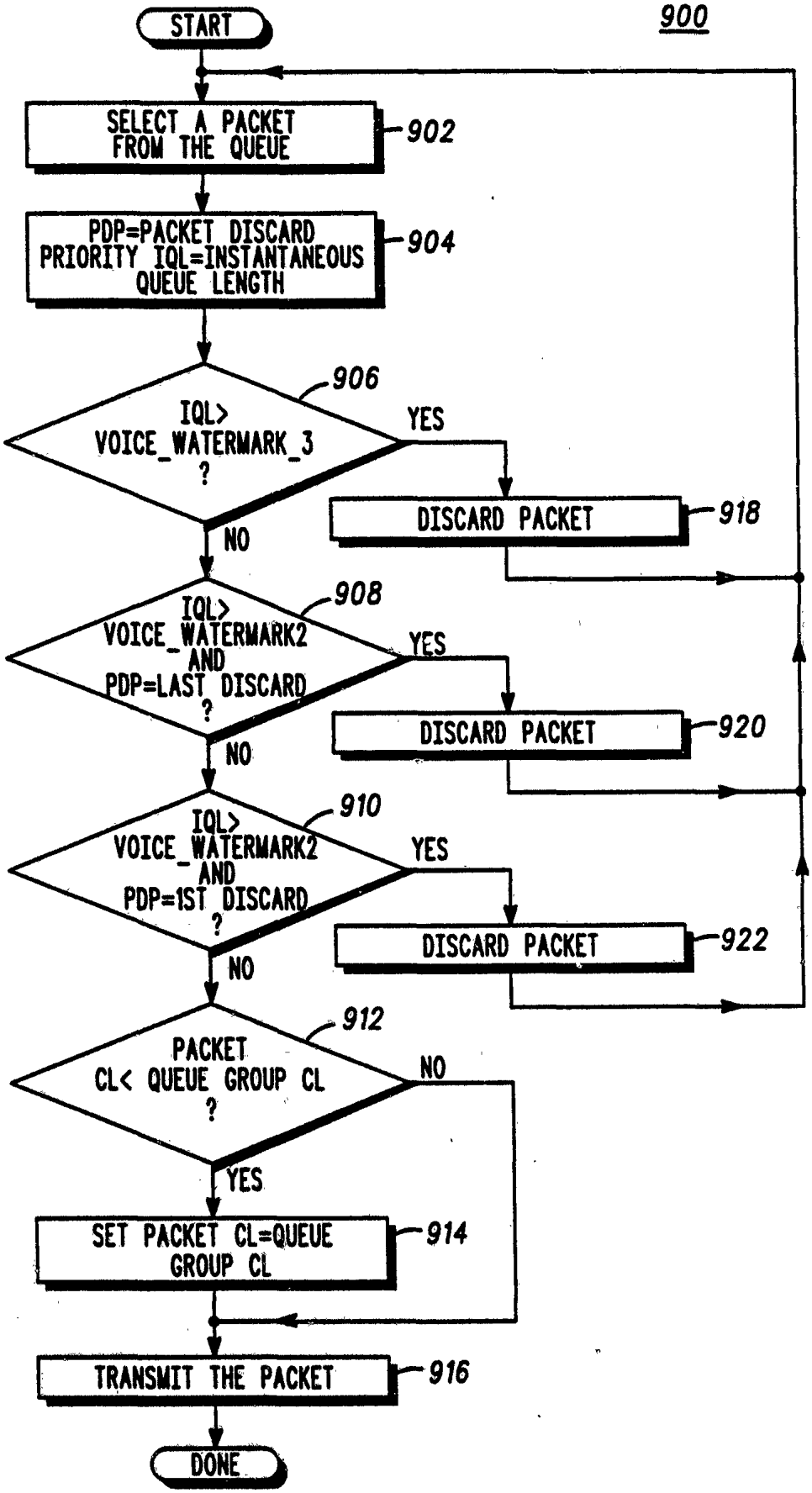
900
START
SELECT A PACKET FROM THE QUEUE
902
PDP=PACKET DISCARD PRIORITY IQL=INSTANTANEOUS QUEUE LENGTH
904
906
IQL> VOICE_WATERMARK_3 ?
YES
NO
DISCARD PACKET
918
908
IQL> VOICE_WATERMARK2 AND PDP=LAST DISCARD ?
YES
NO
DISCARD PACKET
920
910
IQL> VOICE_WATERMARK2 AND PDP=1ST DISCARD ?
YES
NO
DISCARD PACKET
922
912
PACKET CL< QUEUE GROUP CL ?
NO
YES
SET PACKET CL=QUEUE GROUP CL
914
TRANSMIT THE PACKET
916
DONE

FIG.10

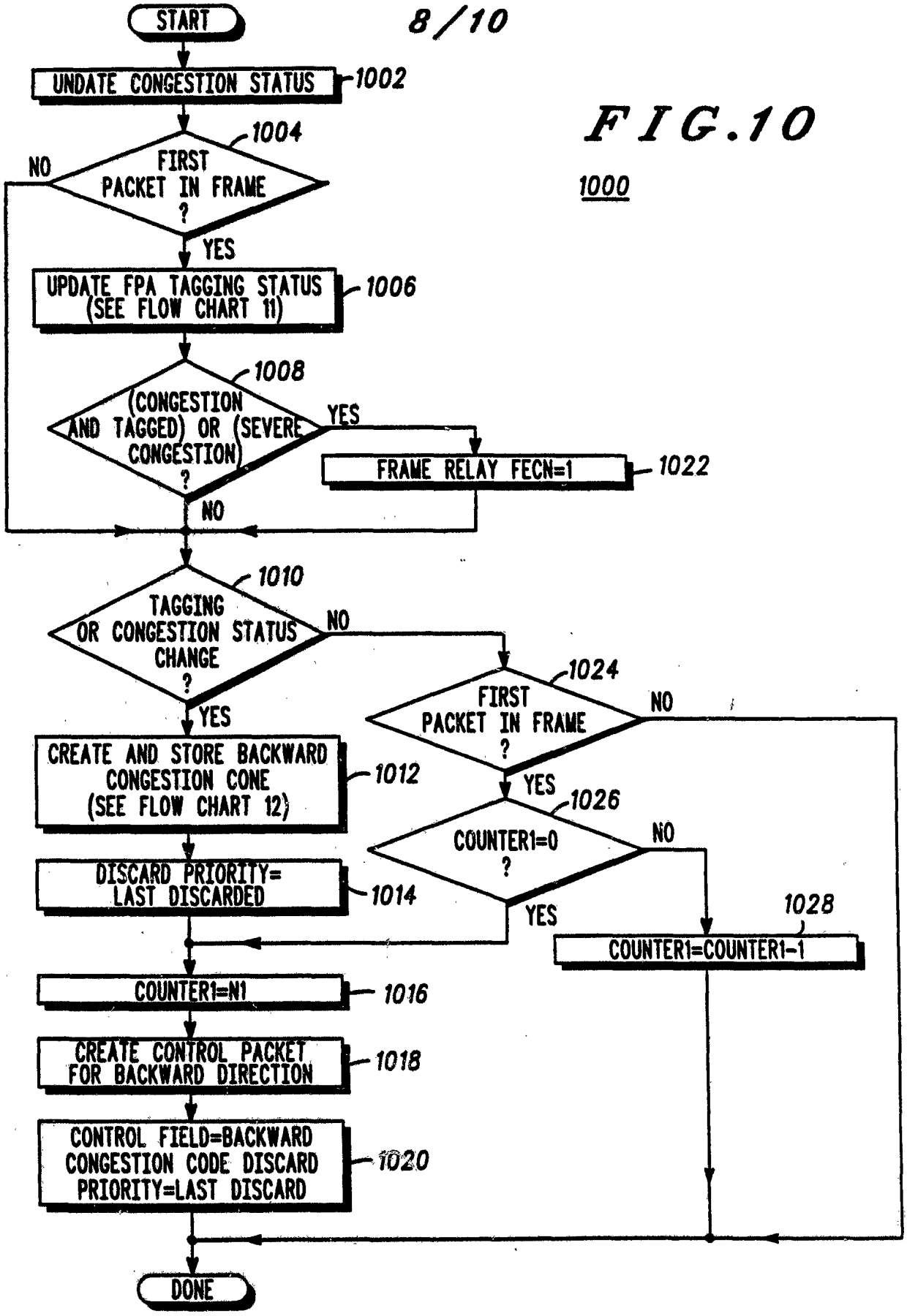
1000
START
UNDATE CONGESTION STATUS
1002
1004
FIRST PACKET IN FRAME ?
NO
YES
UPDATE FPA TAGGING STATUS (SEE FLOW CHART 11)
1006
1008
(CONGESTION AND TAGGED) OR (SEVERE CONGESTION) ?
YES
FRAME RELAY FECN=1
1022
NO
1010
TAGGING OR CONGESTION STATUS CHANGE ?
NO
YES
1024
FIRST PACKET IN FRAME ?
NO
YES
1026
COUNTER1=0 ?
NO
YES
1028
COUNTER1=COUNTER1-1
CREATE AND STORE BACKWARD CONGESTION CONE (SEE FLOW CHART 12)
1012
DISCARD PRIORITY= LAST DISCARDED
1014
COUNTER1=N1
1016
CREATE CONTROL PACKET FOR BACKWARD DIRECTION
1018
CONTROL FIELD=BACKWARD CONGESTION CODE DISCARD PRIORITY=LAST DISCARD
1020
DONE

FIG.12

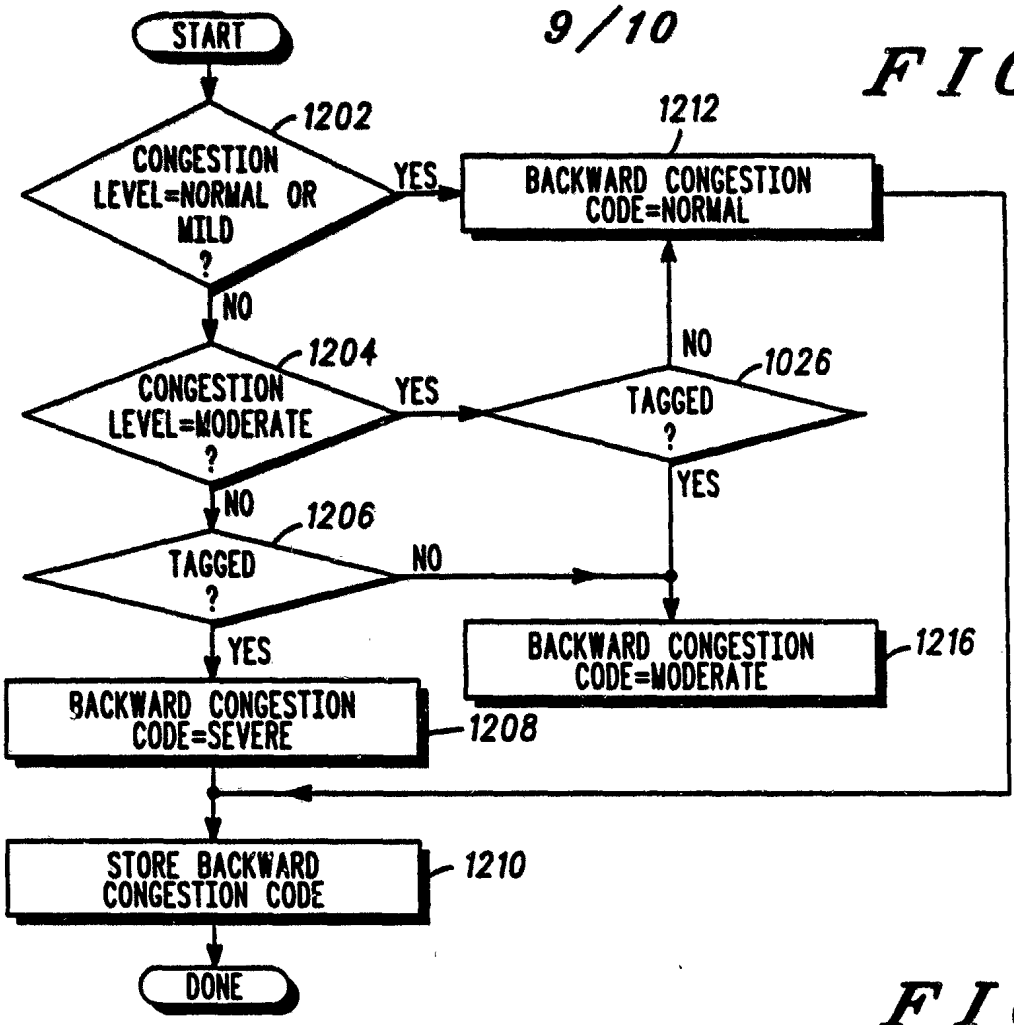
1200
START
1202
CONGESTION LEVEL=NORMAL OR MILD ?
YES
1212
BACKWARD CONGESTION CODE=NORMAL
NO
1204
CONGESTION LEVEL=MODERATE ?
YES
1026
TAGGED ?
NO
YES
NO
1206
TAGGED ?
NO
YES
BACKWARD CONGESTION CODE=MODERATE
1216
BACKWARD CONGESTION CODE=SEVERE
1208
STORE BACKWARD CONGESTION CODE
1210
DONE

FIG.13

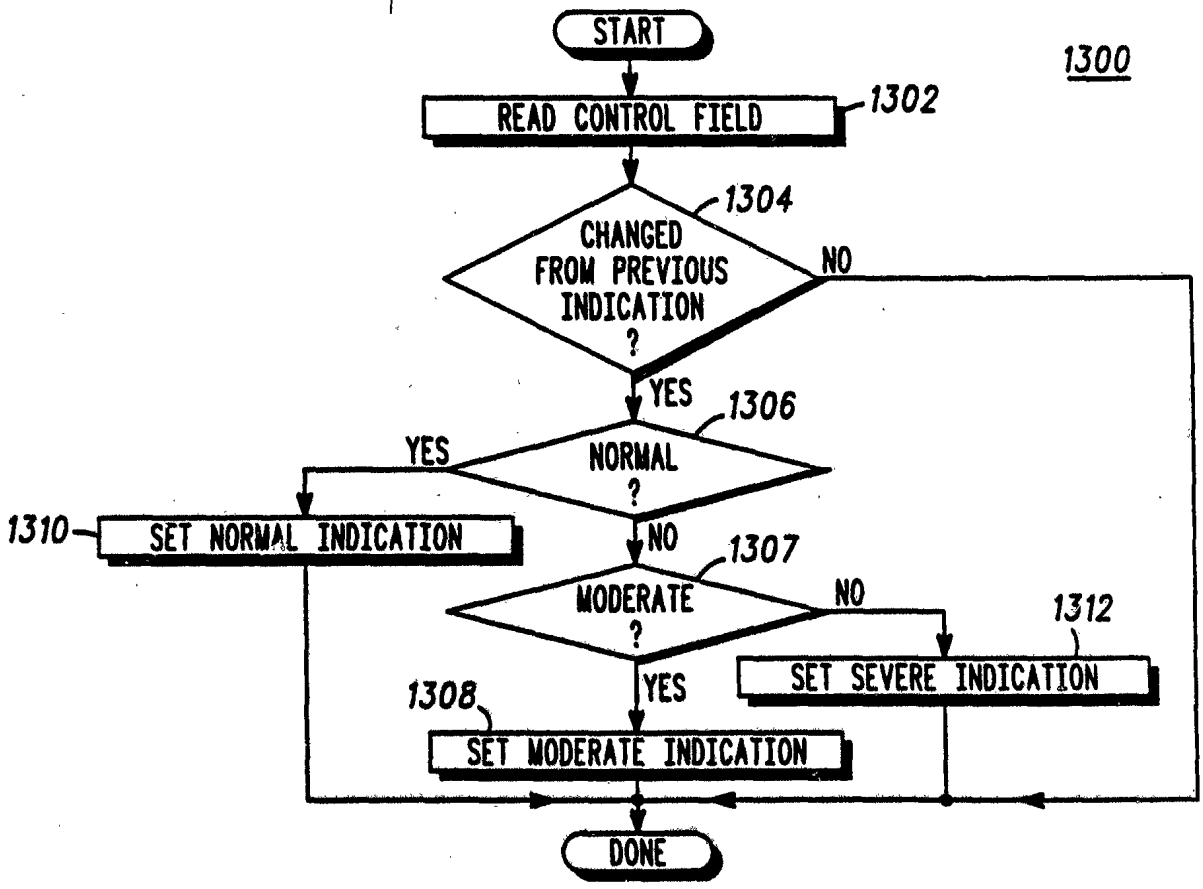
1300
START
READ CONTROL FIELD
1302
1304
CHANGED FROM PREVIOUS INDICATION ?
NO
YES
1306
NORMAL ?
YES
1310
SET NORMAL INDICATION
NO
1307
MODERATE ?
NO
1312
SET SEVERE INDICATION
YES
1308
SET MODERATE INDICATION
DONE

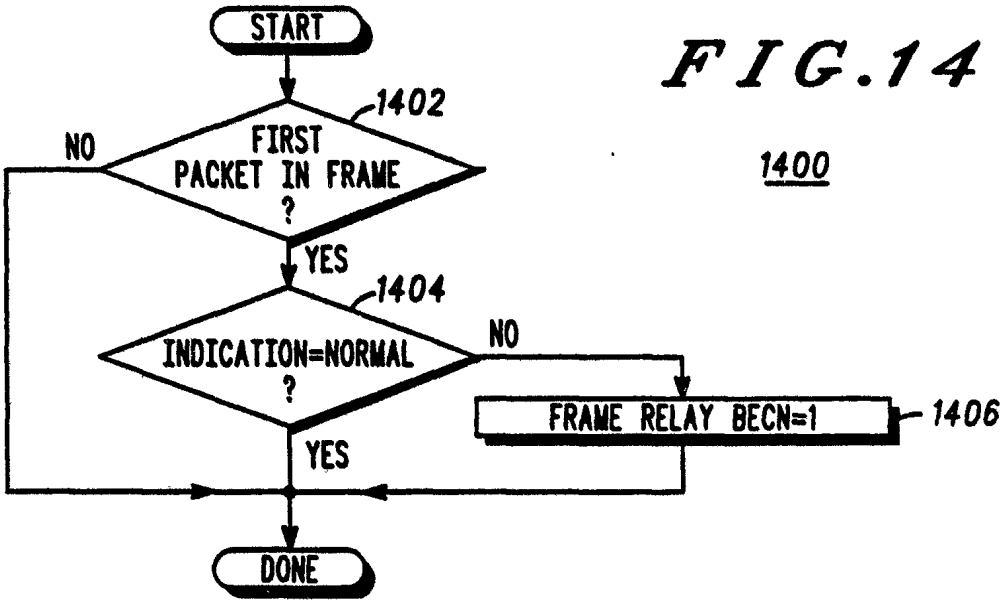

FIG.14

1400

FIG.15

1500

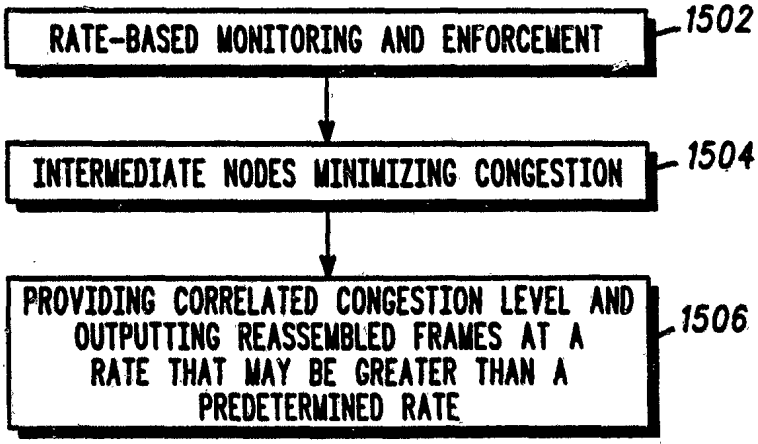

INTERNATIONAL SEARCH REPORT

International application No.
PCT/US92/10638

A. CLASSIFICATION OF SUBJECT MATTER
IPC(5) :H04Q 11/04; H04J 3/24
US CL :370/94.1,94.2,60
According to International Patent Classification (IPC) or to both national classification and IPC

B. FIELDS SEARCHED

Minimum documentation searched (classification system followed by classification symbols)
U.S. : 370/94.1, 94.2, 60

Documentation searched other than minimum documentation to the extent that such documents are included in the fields searched

Electronic data base consulted during the international search (name of data base and, where practicable, search terms used)

C. DOCUMENTS CONSIDERED TO BE RELEVANT

Category*	Citation of document, with indication, where appropriate, of the relevant passages	Relevant to claim No.
X	US,A, 4,769,180 (ECKBERG, JR. ET AL) 06 SEPTEMBER 1988 See figs. 1 and 6	1-3,6-7
X	US,A, 4,769,811 (ECKBERG, JR. ET AL) 06 SEPTEMBER 1988 See figs. 1 and 6	1-3,6-7
A	US,A, 4,849,968 (TURNER) 18 JULY 1989 See whole reference	1-3,6-9
A	US,A, 4,942,569 (MAENO) 17 JULY 1990 See whole refeence	1-3,6-9

☐ Further documents are listed in the continuation of Box C. ☐ See patent family annex.

*	Special categories of cited documents:	"T"	later document published after the international filing date or priority date and not in conflict with the application but cited to understand the principle or theory underlying the invention
"A"	document defining the general state of the art which is not considered to be part of particular relevance	"X"	document of particular relevance; the claimed invention cannot be considered novel or cannot be considered to involve an inventive step when the document is taken alone
"E"	earlier document published on or after the international filing date	"Y"	document of particular relevance; the claimed invention cannot be considered to involve an inventive step when the document is combined with one or more other such documents, such combination being obvious to a person skilled in the art
"L"	document which may throw doubts on priority claim(s) or which is cited to establish the publication date of another citation or other special reason (as specified)	"&"	document member of the same patent family
"O"	document referring to an oral disclosure, use, exhibition or other means		
"P"	document published prior to the international filing date but later than the priority date claimed		

Date of the actual completion of the international search	Date of mailing of the international search report
03 MARCH 1993	06 APR 1993
Name and mailing address of the ISA/US Commissioner of Patents and Trademarks Box PCT Washington, D.C. 20231 Facsimile No. NOT APPLICABLE	Authorized officer AJIT PATEL Telephone No. (703) 305-4813

Form PCT/ISA/210 (second sheet)(July 1992)*