(12) INTERNATIONAL APPLICATION PUBLISHED UNDER THE PATENT COOPERATION TREATY (PCT)

(19) World Intellectual Property Organization
International Bureau

PCT

(43) International Publication Date
3 August 2006 (03.08.2006)

(10) International Publication Number
WO 2006/080800 A1

(51) International Patent Classification:
D06F 39/12 (2006.01) *F24F 13/24* (2006.01)

(21) International Application Number:
PCT/KR2006/000282

(22) International Filing Date: 25 January 2006 (25.01.2006)

(25) Filing Language: Korean

(26) Publication Language: English

(30) Priority Data:
10-2005-0006678 25 January 2005 (25.01.2005) KR

(71) Applicant *(for all designated States except US)*: **LG ELECTRONICS INC.** [KR/KR]; 20, Yoido-dong, Youngdungpo-gu, Seoul 150-721 (KR).

(72) Inventors; and

(75) Inventors/Applicants *(for US only)*: **SON, Ji Chang** [KR/KR]; 112-503 Sapadongsung Apt., Sapa-dong, Changwon-si, Gyeongsangnam-do 641-775 (KR). **CHOI, Kang Mo** [KR/KR]; 106-1301 Hyundae Apt., Jung-ri, Naeseo-eup, Masan-si, Gyeongsangnam-do 630-762 (KR). **CHU, Hyung Wook** [KR/KR]; 417-12 Mangmi 2-dong, Suyeong-gu, Busan 613-821 (KR). **CHA, Woong Kil** [KR/KR]; 103-612 Towolsungwon Apt., 45-1 Sang-nam-dong, Changwon-si, Gyeongsangnam-do 641-829 (KR).

(74) Agents: **BAHNG, Hae Cheol** et al.; KBK & Associates, 15th Floor, YoSam Building, 648-23 Yeoksam-dong, Kangnam-ku, Seoul 135-080 (KR).

(81) Designated States *(unless otherwise indicated, for every kind of national protection available)*: AE, AG, AL, AM, AT, AU, AZ, BA, BB, BG, BR, BW, BY, BZ, CA, CH, CN, CO, CR, CU, CZ, DE, DK, DM, DZ, EC, EE, EG, ES, FI, GB, GD, GE, GH, GM, HR, HU, ID, IL, IN, IS, JP, KE, KG, KM, KN, KP, KZ, LC, LK, LR, LS, LT, LU, LV, LY, MA, MD, MG, MK, MN, MW, MX, MZ, NA, NG, NI, NO, NZ, OM, PG, PH, PL, PT, RO, RU, SC, SD, SE, SG, SK, SL, SM, SY, TJ, TM, TN, TR, TT, TZ, UA, UG, US, UZ, VC, VN, YU, ZA, ZM, ZW.

(84) Designated States *(unless otherwise indicated, for every kind of regional protection available)*: ARIPO (BW, GH,

[Continued on next page]

(54) Title: WASHING MACHINE

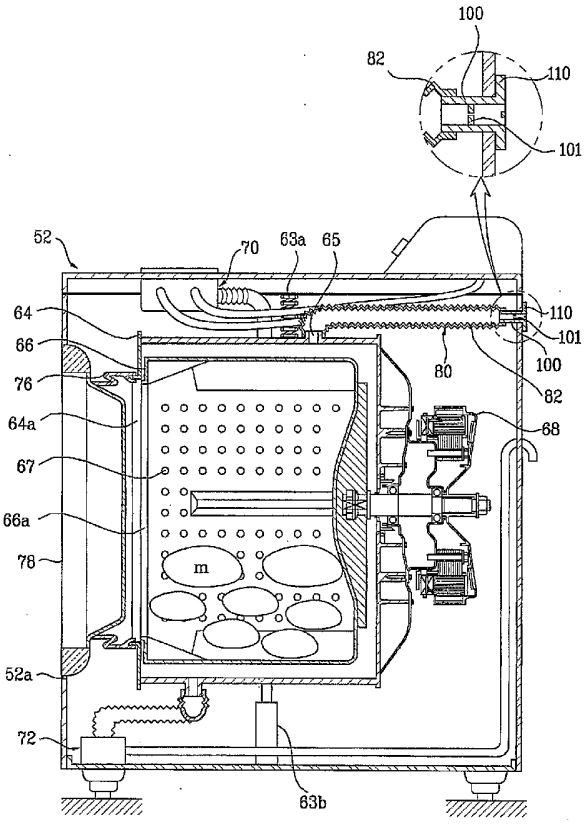

(57) Abstract: The present invention relates to washing machines, and more particularly, to a washing machine having a venting device (100) for making a tub (64) therein in communication with an outside of the washing machine, with noise leakage preventive means provided thereto. For this, a washing machine of the present inventions includes a tub (64) in a cabinet (52), a venting unit (100) for making the tub (64) to be in communicatin with an outside of the cabinet (52), and sound insulation means in the venting unit (100) for blocking noise from leaking from the tub (64) to the outside of the cabinet (52).

WO 2006/080800 A1

GM, KE, LS, MW, MZ, NA, SD, SL, SZ, TZ, UG, ZM, ZW), Eurasian (AM, AZ, BY, KG, KZ, MD, RU, TJ, TM), European (AT, BE, BG, CH, CY, CZ, DE, DK, EE, ES, FI, FR, GB, GR, HU, IE, IS, IT, LT, LU, LV, MC, NL, PL, PT, RO, SE, SI, SK, TR), OAPI (BF, BJ, CF, CG, CI, CM, GA, GN, GQ, GW, ML, MR, NE, SN, TD, TG).

Published:
— *with international search report*

For two-letter codes and other abbreviations, refer to the "Guidance Notes on Codes and Abbreviations" appearing at the beginning of each regular issue of the PCT Gazette.

Description

WASHING MACHINE

Technical Field

[1] The present invention relates to washing machines, and more particularly, to a washing machine having a venting device for making a tub therein in communication with an outside of the washing machine, with noise leakage preventive means provided thereto.

Background Art

[2] In general, in recent purchase of a domestic washing machine, not only a performance of the washing machine, but also convenience of use is a very important factor for purchasing the product. Consequently, development of the product is accelerated for enhancing the convenience of use.

[3] In the meantime, though a drum type washing system, washing laundry by using friction between a drum rotated by a motor and the laundry in a state detergent, washing water and the laundry is introduced to the drum, gives almost no damage to the laundry, has no entangling of the laundry, and provides a washing effect of rubbing and pounding the laundry, because of inconvenience in putting in/taking out the laundry, technical developments are in progress for improving the inconvenience.

[4] FIG. 1 illustrates a section of a related art washing machine.

[5] Referring to FIG. 1, the related art washing machine is provided with a cabinet 2 having a laundry opening 2a in a front center, a tub 4 suspended in the cabinet 2 with springs 3a and dampers 3b, having an opening 4a in rear of the laundry opening 2a, a drum 6 rotatably mounted in the tub 4 having an opening 6a in rear of the laundry opening 2a for receiving the laundry, and water holes 7 in a circumferential surface, a driving motor 8 mounted on a rear wall of the tub 4 for rotating the drum 6, a water supply unit 10 for supplying detergent or water to the tub 4, a draining unit 12 for draining water from the tub 4 to an outside of the washing machine, a gasket 16 in front of the tub 4 for preventing both water in the tub 4 and the laundry 'm' in the drum 6 from flowing away between the tub 4 and the cabinet 2, a door 18 rotatably mounted on a front of the cabinet 2, for opening/closing a portion beyond the gasket 16, and a venting unit 20 for making an inside of the tub 4 to be in communication with an outside of the cabinet 2.

[6] The venting unit 20 is provided with a bellows 22 having one end connected to a vent hole 5 projected from a top of the tub 4, and a vent pipe 100, or 110 secured to a

rear of the cabinet 2 with fastening means (not shown), having the other end of the bellows 22 connected thereto.

[7] The bellows 22 is coupled to the vent pipe 100 and 110 with a clamp (not shown).

[8] The operation of the related art washing machine will be described.

[9] Upon putting the washing machine into operation after putting the laundry 'm' in the drum 6, and closing the door 18, water and detergent supplied from the water supply unit 10 is held on a bottom of the inside of the tub 4, such that a bottom of the drum 6 is submerged under the water and the detergent.

[10] Then, a step for separating dirt from the laundry 'm', a step of rinsing the laundry 'm', and a step for extracting the laundry 'm' are progressed in succession.

[11] In this instance, during the steps are progressed, noise leaks to the rear of the cabinet 2 from the tub 4 through the vent hole 5, the bellows 22, the vent pipe 100, and 110, causing inconvenience coming from the noise during the washing machine is in operation.

Disclosure of Invention

Technical Problem

[12] An object of the present invention is to provide a washing machine for preventing noise from leaking form a tub to an outside of the washing machine.

Technical Solution

[13] The object of the present invention can be achieved by providing a washing machine including a tub in a cabinet, a venting unit for making the tub to be in communication with an outside of the cabinet, and sound insulation means in the venting unit for blocking noise from leaking from the tub to the outside of the cabinet.

[14] In another aspect of the present invention, a washing machine includes a tub in a cabinet, a venting unit for making the tub to be in communication with an outside of the cabinet, and a chamber portion provided to the venting unit for blocking noise from leaking from the tub to an outside of the cabinet.

[15] In another aspect of the present invention, a washing machine includes a cabinet having a laundry opening in a front center, a tub suspended in the cabinet with springs and dampers, having an opening in rear of the laundry opening, a drum rotatably mounted in the tub having an opening in rear of the laundry opening for receiving the laundry, and water holes in a circumferential surface, a driving motor mounted on a rear wall of the tub for rotating the drum, a water supply unit for supplying detergent or water to the tub and a draining unit for draining water from the tub to an outside of

the washing machine, a gasket in front of the tub for preventing both water in the tub and the laundry in the drum from flowing away between the tub and the cabinet, a venting unit including a vent hole projected from a top of the tub, a vent pipe secured to the cabinet, and bellows connected between the vent hole and the vent pipe, and a blocking unit to the vent pipe for blocking noise from leaking from the tub to an outside of the cabinet.

Advantageous Effects

[16] The provision of sound insulation means at a venting unit to make a tub in communication with an outside of a cabinet for blocking noise from a washing machine improves reliability of the product.

Brief Description of the Drawings

[17] The accompanying drawings, which are included to provide a further understanding of the invention, illustrate embodiment(s) of the invention and together with the description serve to explain the principle of the invention. In the drawings;

[18] FIG. 1 illustrates a section of a related art washing machine;

[19] FIG. 2 illustrates a section of a washing machine in accordance with a preferred embodiment of the present invention, with a partial, enlarged sectional view of a vent pipe;

[20] FIG. 3 illustrates a perspective view of a vent pipe in accordance with a first preferred embodiment of the present invention, with a partial cut away view;

[21] FIG. 4 illustrates a side view of a vent pipe in accordance with a first preferred embodiment of the present invention;

[22] FIG. 5 illustrates a perspective view of a vent pipe in accordance with a second preferred embodiment of the present invention, with a partial cut away view;

[23] FIG. 6 illustrates a side view of a vent pipe in accordance with a second preferred embodiment of the present invention;

[24] FIG. 7 illustrates a perspective view of a vent pipe in accordance with a third preferred embodiment of the present invention, with a partial cut away view; and

[25] FIG. 8 illustrates a side view of a vent pipe in accordance with a third preferred embodiment of the present invention.

Best Mode for Carrying Out the Invention

[26] Reference will now be made in detail to the preferred embodiments of the present invention, examples of which are illustrated in the accompanying drawings.

[27] FIG. 2 illustrates a section of a washing machine in accordance with a preferred

embodiment of the present invention, with a partial, enlarged sectional view of a vent pipe, FIG. 3 illustrates a perspective view of a vent pipe in accordance with a first preferred embodiment of the present invention, with a partial cut away view, and FIG. 4 illustrates a side view of a vent pipe in accordance with a first preferred embodiment of the present invention.

[28] Referring to FIG. 2, the washing machine in accordance with a preferred embodiment of the present invention includes a cabinet 52 having a laundry opening 52a in a front center, a tub 64 suspended in the cabinet 52 with springs 63a and dampers 63b, having an opening 64a in rear of the laundry opening 52a, a drum 66 rotatably mounted in the tub 64 having an opening 66a in rear of the laundry opening 52a for receiving the laundry, and water holes 67 in a circumferential surface, a driving motor 68 mounted on a rear wall of the tub 64 for rotating the drum 66, a water supply unit 70 for supplying detergent or water to the tub 64, a draining unit 72 for draining water from the tub 64 to an outside of the washing machine, a gasket 76 in front of the tub 64 for preventing both water in the tub 64 and the laundry 'm' in the drum 66 from flowing away between the tub 64 and the cabinet 52, a door 78 rotatably mounted on a front of the cabinet 52, for opening/closing a portion beyond the gasket 76, a venting unit 80 for making an inside of the tub 64 in communication with an outside of the cabinet 52, and sound insulation means in the venting unit 80 for preventing nose from leaking from the tub 64 to an outside of the cabinet 52.

[29] For an example, the venting unit 80 includes a bellows 82 having one end connected to a vent hole 65 projected from a top of the tub 64, and a vent pipe 100, and 110 secured to a rear of the cabinet 52 with fastening means (not shown), having the other end of the bellows 82 connected thereto.

[30] The bellows 22 may be coupled to the vent pipe 100 and 110 with a clamp (not shown).

[31] Referring to FIG. 3 or 4, the vent pipe 100 and 110 has a connection portion 100 connected to the bellows 82 and a fastening portion 110 for fastening to a rear of the cabinet 52 of the washing machine.

[32] The connection portion 100 is cylindrical with openings I1 on opposite sides, and the fastening portion 110 has vent holes W1 for venting the tub 64 to an outside of the washing machine.

[33] Thus, air in the tub 64 vents to the outside of the washing machine through the opening I1 and the vent holes W1.

[34] The fastening portion 110 has fastening means 111, and 112 for fastening the

fastening portion 110 to the rear of the cabinet 52.

[35] For an example, the fastening means 111, and 112 may include a first fastening member 111 having a projection 111a formed in correspondence to a hole (not shown) in the rear of the cabinet for placing the projection 111a therein, and a second fastening member 112 having a hook 112a for placing in a hook hole (not shown) in the rear of the cabinet.

[36] The sound insulation means in accordance with a first preferred embodiment of the present invention is at least one blocking wall 101 for blocking noise transmitted through the vent pipe 100, and 110. The first embodiment of the present invention suggests two pairs of blocking walls 101a, and 101b in the connection portion 100 of the vent pipe 100 and 110.

[37] In more detail, referring to FIG. 4, the two pairs of blocking walls 101a, and 101b are one pair of first blocking walls 101a projected opposite to each other, and one pair of second blocking walls 101b projected opposite to each other, in rear of, and spaced from the first blocking walls 101a. It is preferable that the first blocking walls 101a and the second blocking walls 101b are arranged to cross each other.

[38] In the meantime, it is preferable that ribs 103 are mounted such that one end thereof is connected to the blocking wall 101 and the other end thereof is connected to the connection portion 100, for supporting the blocking wall 101.

[39] Mbreover, there may be a handle 113 on an outside of the fastening portion 110 for holding the vent pipe 100, and 110.

[40] In the meantime, of course, though the first embodiment suggests the blocking wall 101 formed at the connection portion 100 of the vent pipe 100, and 110, the blocking wall 101 may be formed at the bellows 82 or the vent hole 65.

[41] Accordingly, noise from the tub 64 of the washing machine is reflected at, and dissipated by, the one pair of the first blocking walls 101a firstly, and is reflected at, and dissipated by, the one pair of the second blocking walls 101b secondly, to prevent the noise proceeding to an outside of the cabinet 52.

[42] A result of test of a level of noise blocked by the blocking wall 101 is as follows.

[43] As a result of measurement of a noise level at the rear of the cabinet 52 of the washing machine during washing, while the noise generated at the washing machine having the related art vent pipe 30, and 40 is 60dB, the noise generated at the washing machine having the vent pipe 100, and 110 with the blocking walls of the present invention applied thereto is 57.5dB during washing, with a reduction of 2.5dB. That is, the two pairs of blocking walls 101a, and 101b provide an effect of approx. 44% of

noise reduction compared to the related art.

[44] FIG. 5 illustrates a perspective view of a vent pipe in accordance with a second preferred embodiment of the present invention, with a partial cut away view, and FIG. 6 illustrates a side view of a vent pipe in accordance with a second preferred embodiment of the present invention, wherein solid line arrows denote paths of noise reflected at the sound insulation means.

[45] As can be known from FIGS. 5 and 6, the sound insulation means in accordance with the second preferred embodiment of the present invention includes two blocking walls in the venting unit, i.e., a first blocking wall 131a and a second blocking wall 131b.

[46] In the meantime, the vent pipe 130, and 140 may include a connection portion 130 connected to a bellows 82 of the washing machine, and a fastening portion 140 fastened to the rear of the cabinet 52 of the washing machine.

[47] The connection portion 130 is cylindrical, with opposite openings I2, having vent holes W2 formed therein for venting the tub 64 to an outside of the washing machine.

[48] Thus, the air vents form the tub 64 to the outside of the washing machine with the opening I2 and the vent holes W2.

[49] The fastening portion 140 has fastening means 141, and 142 for fastening the fastening portion 140 to the rear of the cabinet 52.

[50] The fastening means 141, and 142 include a first fastening member 141 having a projection 141a formed in correspondence to a hole (not shown) in the rear of the cabinet for placing the projection 141a therein, and a second fastening member 142 having a hook 142a for placing in a hook hole (not shown) in the rear of the cabinet.

[51] The second embodiment of the present invention suggests the two blocking walls 131a, and 131b mounted to the connection portion 130.

[52] For an example, referring to FIG. 6, it is preferable that the two blocking walls 131a, and 131b are tilted the more toward an inner side of the cabinet as it goes toward a center of the vent pipe 130, and 140 such that a flow path in the vent pipe 130, and 140 is zigzag.

[53] There may be ribs 133 at joining portions between an inside of each of blocking walls 131a, and 131b and the connection portion 130, for supporting the blocking walls 131a, and 131b.

[54] Noise from the tub 64 is reflected at, and dissipated by, the first blocking wall 131a and the second blocking wall 131b firstly, and is dissipated as the noise proceeds through the zigzag path to cause interference.

[55] Accordingly, leakage of the noise from the tub 64 to an outside of the cabinet 52 is prevented.

[56] Of course, though the second embodiment of the present invention suggests two blocking walls 131, the blocking walls 131 may be two or three, and the noise reduction effect is obtainable even if the blocking walls 131 are not tilted.

[57] It is apparent that the blocking wall 131 is not formed at the connection portion 130 of the vent pipe, but at the bellows 82, or the vent hole 65.

[58] FIG. 7 illustrates a perspective view of a vent pipe in accordance with a third preferred embodiment of the present invention, with a partial cut away view, and FIG. 8 illustrates a side view of a vent pipe in accordance with a third preferred embodiment of the present invention, wherein solid line arrows denote paths of noise reflected at the sound insulation means.

[59] Referring to FIGS. 7 and 8, as the sound insulation means in accordance with a third preferred embodiment of the present invention, a chamber portion 'R' in a venting unit is suggested.

[60] The vent pipe 160, and 170 includes a connection portion 160 connected to the bellows 82, and a fastening portion 170 fastened to a rear of the cabinet 52 of the washing machine.

[61] The connection portion 160 is cylindrical with openings I3 on opposite sides, and the fastening portion 170 has vent holes W3 for venting the tub 64 to an outside of the washing machine.

[62] Thus, air in the tub 64 vents to the outside of the washing machine through the openings I3 and the vent holes W3.

[63] The fastening portion 170 has fastening means 171, and 172 for fastening the fastening portion 170 to the rear of the cabinet.

[64] The fastening means 171, and 172 may include a first fastening member 171 having a projection 171a formed in correspondence to a hole (not shown) in the rear of the cabinet for placing the projection 171a therein, and a third fastening member 172 having a hook 172a for placing in a hook hole (not shown) in the rear of the cabinet.

[65] The third embodiment suggests the chamber portion 'R' formed in the connection portion 160 of the vent pipe.

[66] The chamber portion 'R' will be described in more detail.

[67] The chamber portion 'R' includes a first chamber R1 having first/second blocking walls 160a, and 160b spaced a predetermined distance from each other, to form a hole 'S' between the blocking walls 160a, and 160b, and a second chamber R2 having first/

second blocking walls 160a, and 160b spaced a predetermined distance from each other, to form a hole 'S' between the blocking walls 160a, and 160b. The chambers R1 and R2 are arranged to have a gap 'd' of a predetermined distance.

[68] The gap is formed so that noise and air entered into the opening I3 leaks toward the holes W3.

[69] The holes 'S' in each of the chambers R1, and R2 are opposite to each other. It can be known that the gap 'd' is a space between the chambers R1, and R2.

[70] Of course, though the third embodiment of the present invention suggests two chambers R1, and R2, the chambers may be 1 or 3 or more than 3, and the holes 'S' may be formed at the chambers R1, and R2 to face a noise propagation direction.

[71] The noise from the tub 64 is reflected at, and dissipated by the first blocking wall 160a, and introduced into, and dissipated in the holes 'S' in the chambers R1 and R2, to prevent the noise from proceeding to an outside of the washing machine.

[72] Of course, the chamber portion 'R' may be formed not at the connection portion 160 of the vent pipe, but at the bellows 82 or the vent hole 65.

[73] It will be apparent to those skilled in the art that various modifications and variations can be made in the present invention without departing from the spirit or scope of the inventions. Thus, it is intended that the present invention covers the modifications and variations of this invention provided they come within the scope of the appended claims and their equivalents.

Industrial Applicability

[74] The provision of sound insulation means at a venting unit to make a tub in communication with an outside of a cabinet for blocking noise from a washing machine improves reliability of the product. Therefore, the present invention has a significantly high industrial applicability.

Claims

[1] A washing machine comprising:
a tub in a cabinet;
a venting unit for making the tub to be in communication with an outside of the cabinet; and
sound insulation means in the venting unit for blocking noise from leaking from the tub to the outside of the cabinet.

[2] The washing machine as claimed in claim 1, wherein the venting unit includes;
a vent hole projected from a top of the tub;
a vent pipe secured to the cabinet, and
bellows connected between the vent hole and the vent pipe.

[3] The washing machine as claimed in claim 2, wherein the vent pipe includes;
a connection portion placed in the vent hole, and
a fastening portion for fastening the connection portion to the cabinet.

[4] The washing machine as claimed in claim 3, wherein the sound insulation means is mounted to the connection portion of the vent pipe.

[5] The washing machine as claimed in claim 4, wherein the sound insulation means is at least one blocking wall for blocking noise introduced into the vent pipe.

[6] The washing machine as claimed in claim 5, wherein the blocking wall includes;
one pair of first blocking walls projected opposite to each other, and
one pair of second blocking walls projected opposite to each other arranged at a predetermined distance in rear of the one pair of first blocking walls.

[7] The washing machine as claimed in claim 6, wherein the one pair of the first blocking walls and the one pair of the second blocking walls are arranged to cross each other.

[8] The washing machine as claimed in claim 7, wherein the blocking wall has at least one rib at a rear of the blocking wall for supporting the blocking wall.

[9] The washing machine as claimed in claim 5, wherein the blocking wall includes a first blocking wall and a second blocking wall, and the vent pipe has a zigzag form of inside flow path.

[10] The washing machine as claimed in claim 5, wherein the blocking walls are tilted the more as it goes toward to a center of the vent pipe the more.

[11] The washing machine as claimed in claim 10, wherein the blocking wall has at least one rib at a rear of the blocking wall for supporting the blocking wall.

[12] A washing machine comprising:
a tub in a cabinet;
a venting unit for making the tub to be in communication with an outside of the cabinet; and
a chamber portion provided to the venting unit for blocking noise from leaking from the tub to an outside of the cabinet.

[13] The washing machine as claimed in claim 12, wherein the venting unit includes;
a vent hole projected from a top of the tub;
a vent pipe secured to the cabinet, and
bellows connected between the vent hole and the vent pipe.

[14] The washing machine as claimed in claim 13, wherein the vent pipe includes;
a connection portion placed in the vent hole, and
a fastening portion for fastening the connection portion to the cabinet.

[15] The washing machine as claimed in claim 14, wherein the chamber portion is at the connection portion of the venting pipe.

[16] The washing machine as claimed in claim 15, wherein the chamber portion includes;
a first chamber having first/second blocking walls spaced a predetermined distance from each other, to form a hole between the blocking walls, and
a second chamber having first/second blocking walls spaced a predetermined distance from each other, to form a hole between the blocking walls,
wherein the chambers are arranged to have a gap 'd' of a predetermined distance.

[17] A washing machine comprising:
a cabinet having a laundry opening in a front center;
a tub suspended in the cabinet with springs and dampers, having an opening in rear of the laundry opening;
a drum rotatably mounted in the tub having an opening in rear of the laundry opening for receiving the laundry, and water holes in a circumferential surface;
a driving motor mounted on a rear wall of the tub for rotating the drum;
a water supply unit for supplying detergent or water to the tub and a draining unit for draining water from the tub to an outside of the washing machine;
a gasket in front of the tub for preventing both water in the tub and the laundry in the drum from flowing away between the tub and the cabinet;
a venting unit including a vent hole projected from a top of the tub, a vent pipe secured to the cabinet, and bellows connected between the vent hole and the vent

pipe; and

a blocking unit to the vent pipe for blocking noise from leaking from the tub to an outside of the cabinet.

[18] The washing machine as claimed in claim 17, wherein the blocking unit includes;

one pair of first blocking walls projected opposite to each other, and

one pair of second blocking walls projected opposite to each other in rear of the one pair of the first blocking walls.

[19] The washing machine as claimed in claim 17, wherein the blocking unit includes first and second blocking walls projected to form a zigzag inside flow path in the vent pipe.

[20] The washing machine as claimed in claim 17, wherein the blocking unit includes;

a first chamber having first/second blocking walls spaced a predetermined distance from each other, with a hole in each of the blocking wall, and

a second chamber having first/second blocking walls spaced a predetermined distance from each other, with a hole in each of the blocking wall,

wherein the chambers are arranged to have a predetermined gap therebetween.

[Fig. 1]

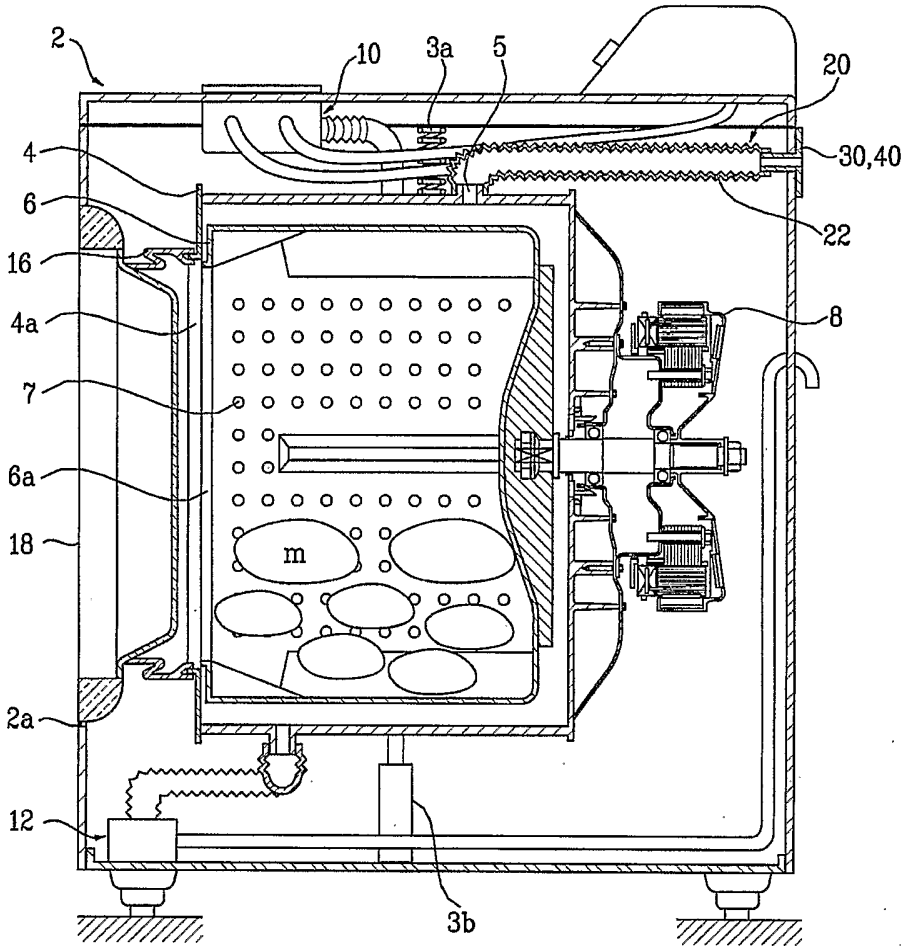

[Fig. 2]

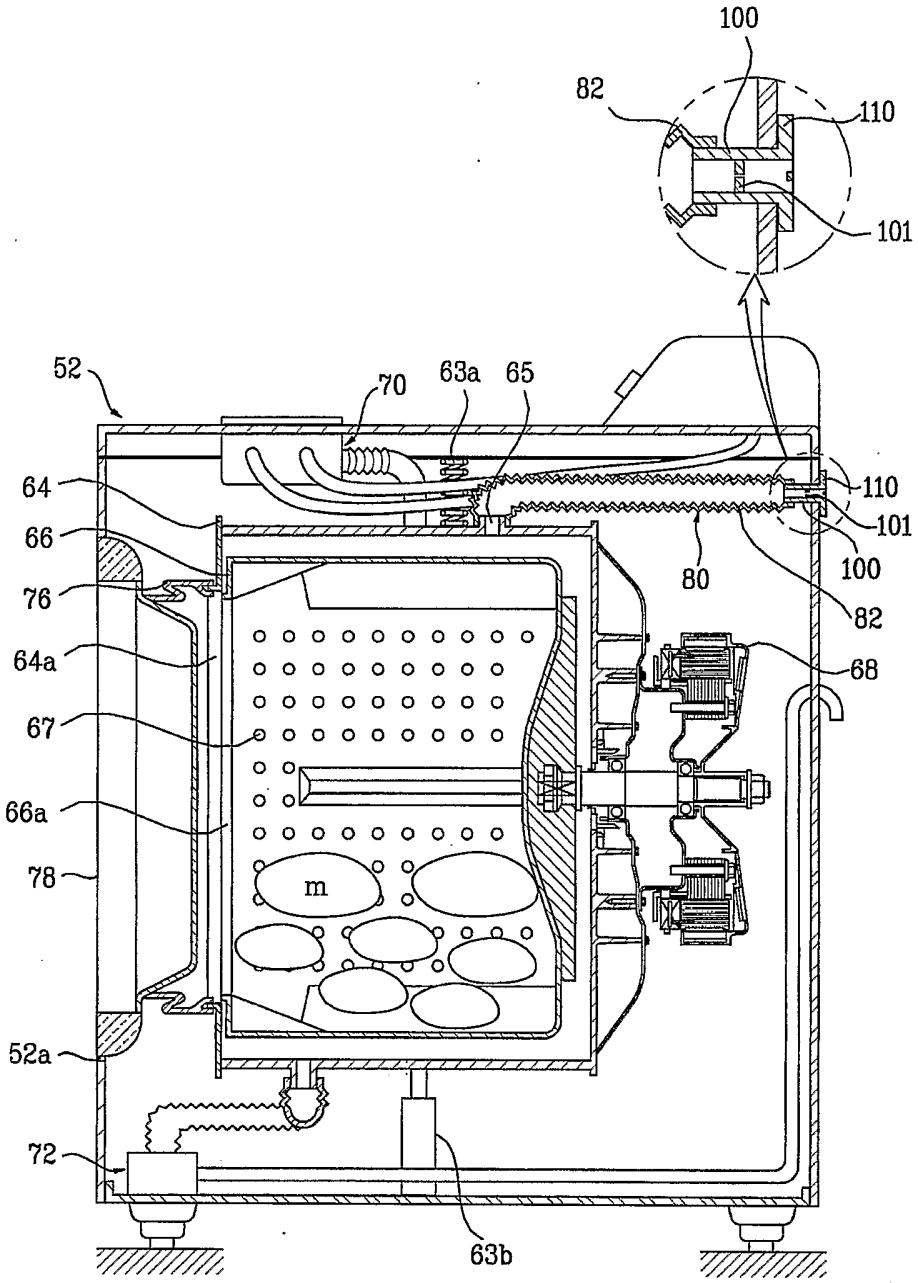

[Fig. 3]

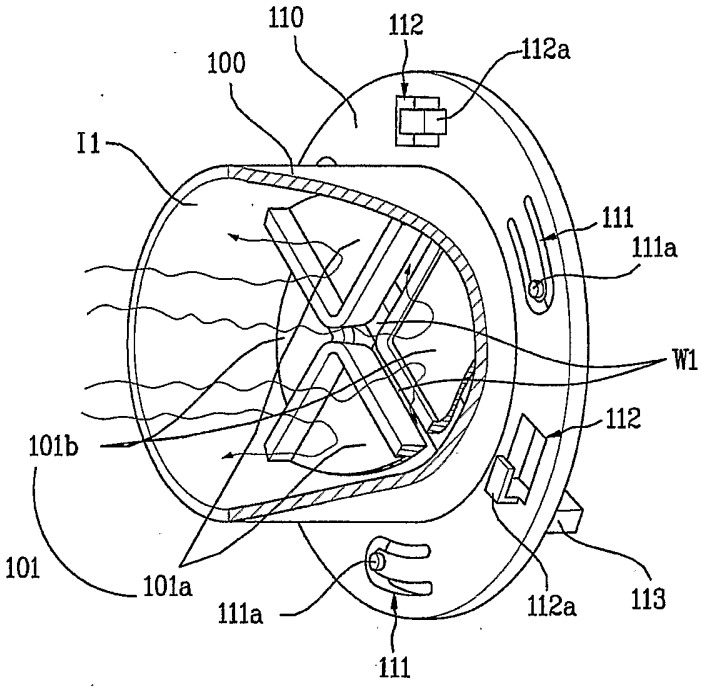
110
112
112a
100
I1
111
111a
W1
112
101b
101
101a
111a
112a
113
111

[Fig. 4]

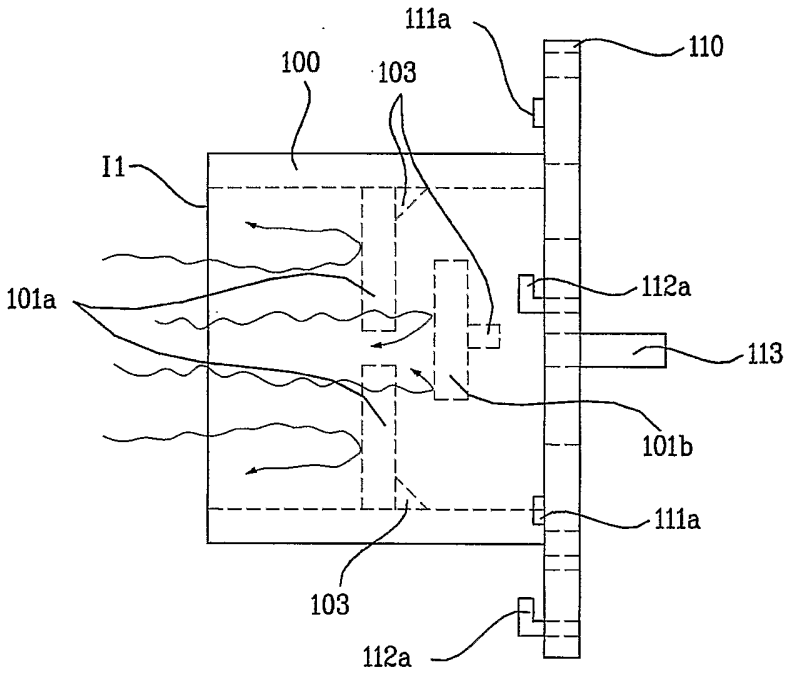
111a
110
100
103
I1
101a
112a
113
101b
111a
103
112a

[Fig. 5]

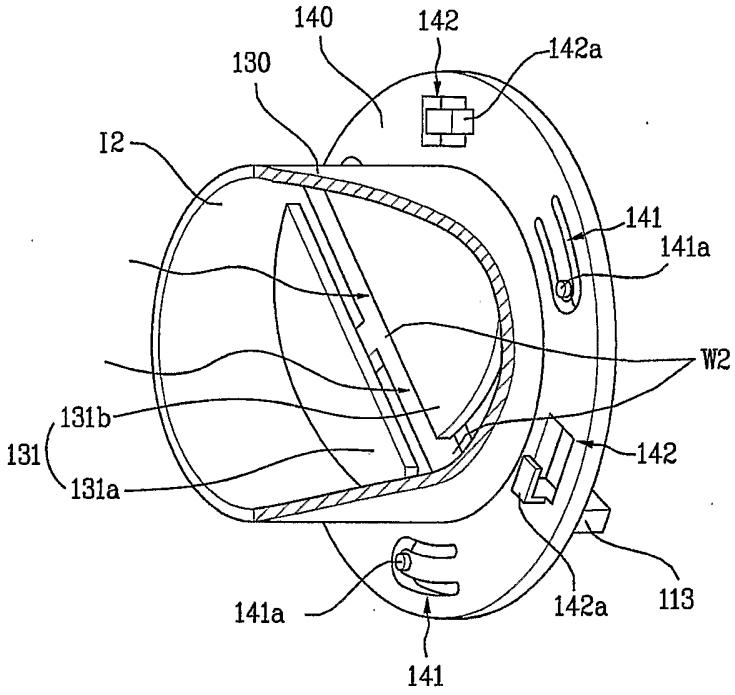
140
142
142a
130
I2
141
141a
W2
131b
131
131a
142
141a
142a
113
141

[Fig. 6]

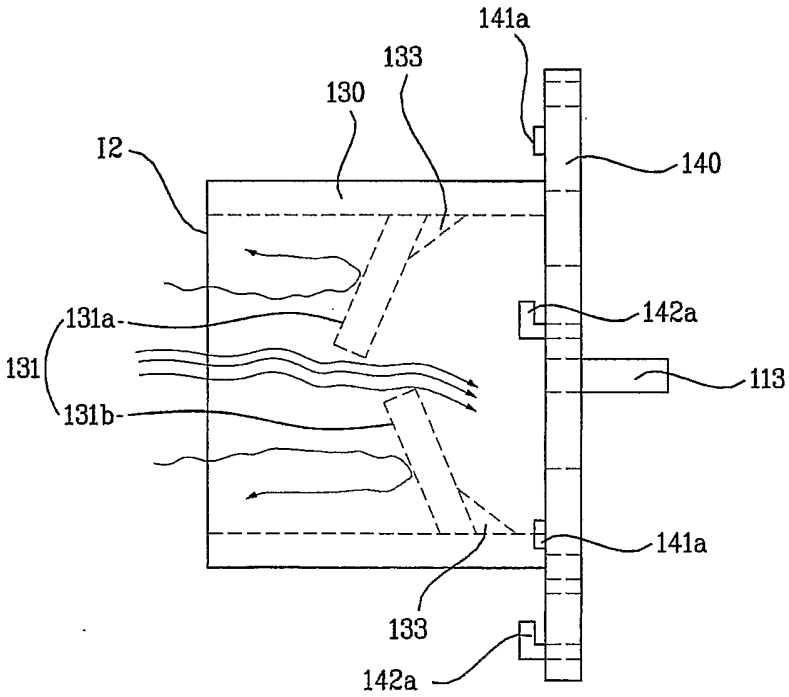
141a
133
130
I2
140
142a
131a
131
113
131b
141a
133
142a

[Fig. 7]

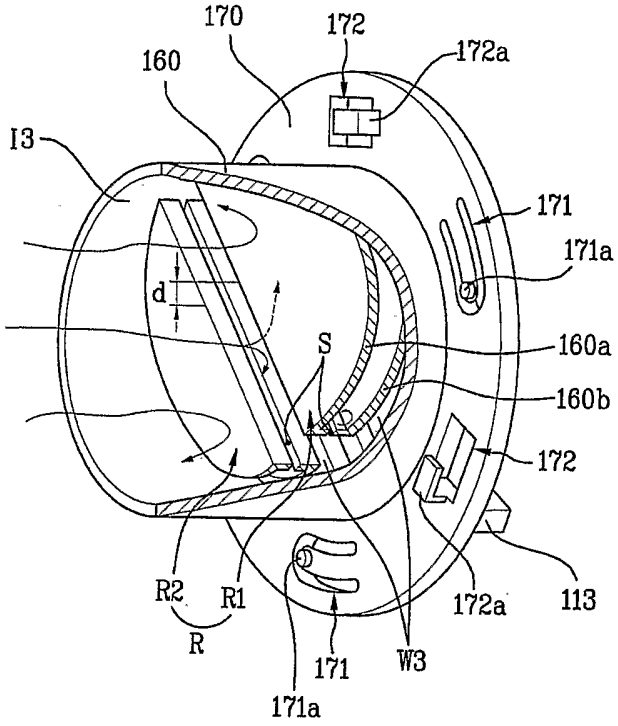
170
172
172a
160
I3
171
171a
d
S
160a
160b
172
R2
R1
R
172a
113
171
W3
171a

[Fig. 8]

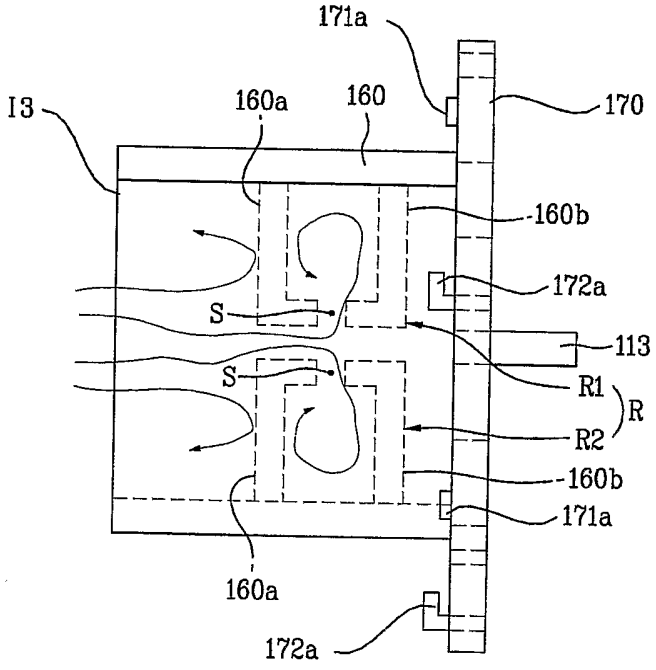
171a
I3
160a
160
170
160b
172a
S
113
S
R1
R
R2
160b
171a
160a
172a

INTERNATIONAL SEARCH REPORT

International application No.
PCT/KR 2006/000282

A. CLASSIFICATION OF SUBJECT MATTER
IPC[8]: ***D06F 39/12*** (2006.01); ***F24F 13/24*** (2006.01)
According to International Patent Classification (IPC) or to both national classification and IPC

B. FIELDS SEARCHED

Minimum documentation searched (classification system followed by classification symbols)
IPC[8]: D06F, F24F

Documentation searched other than minimum documentation to the extent that such documents are included in the fields searched
---

Electronic data base consulted during the international search (name of data base and, where practicable, search terms used)
EPODOC, WPI, PAJ, TXTn

C. DOCUMENTS CONSIDERED TO BE RELEVANT

Category*	Citation of document, with indication, where appropriate, of the relevant passages	Relevant to claim No.
X Y	WO 2003/057969 A1 (LG ELECTRONICS INC.) 17 July 2003 (17.07.2003) *figures 1, 15, 16, page 19, line 11 - page 21, line 12* --	1-5, 12-15, 17 6, 16, 18, 20
Y	WO 1997/009527 A1 (WOCO FRANZ-JOSEF WOLF & CO.) 13 March 1997 (13.03.1997) *figure 5, page 8, line 7 - page 9, line 8* --	6, 16, 18, 20
A	EP 0 844 439 A2 (TECWORK S.R.L. IMPIANTI TECNOLOGICI) 27 May 1998 (27.05.1998) *figure 1, column 2, line 21 - column 3, line 28* ----	8-11, 19

☐ Further documents are listed in the continuation of Box C.

☒ See patent family annex.

* Special categories of cited documents:
"A" document defining the general state of the art which is not considered to be of particular relevance
"E" earlier application or patent but published on or after the international filing date
"L" document which may throw doubts on priority claim(s) or which is cited to establish the publication date of another citation or other special reason (as specified)
"O" document referring to an oral disclosure, use, exhibition or other means
"P" document published prior to the international filing date but later than the priority date claimed
"T" later document published after the international filing date or priority date and not in conflict with the application but cited to understand the principle or theory underlying the invention
"X" document of particular relevance; the claimed invention cannot be considered novel or cannot be considered to involve an inventive step when the document is taken alone
"Y" document of particular relevance; the claimed invention cannot be considered to involve an inventive step when the document is combined with one or more other such documents, such combination being obvious to a person skilled in the art
"&" document member of the same patent family

Date of the actual completion of the international search	Date of mailing of the international search report
19 April 2006 (19.04.2006)	10 May 2006 (10.05.2006)

Name and mailing address of the ISA/ AT	Authorized officer
Austrian Patent Office Dresdner Straße 87, A-1200 Vienna	WININGER B.
Facsimile No. +43 / 1 / 534 24 / 535	Telephone No. +43 / 1 / 534 24 / 460

INTERNATIONAL SEARCH REPORT

Information on patent family members

International application No.
PCT/KR 2006/000282

Patent document cited in search report	Publication date	Patent family member(s)	Publication date
EP A 844439		none	
WO A 1997009527		none	
WO A 2003057969		none	