US009751679B2

(12) **United States Patent**
Stelzer et al.

(10) **Patent No.: US 9,751,679 B2**
(45) **Date of Patent: *Sep. 5, 2017**

(54) **VACUUM ABSORBING BASES FOR HOT-FILL CONTAINERS**

(71) Applicant: **Amcor Limited**, Hawthorn, Victoria (AU)

(72) Inventors: **James Stelzer**, South Lyon, MI (US); **Michael T. Lane**, Brooklyn, MI (US)

(73) Assignee: **Amcor Limited**, Hawthorn, Victoria (AU)

(*) Notice: Subject to any disclaimer, the term of this patent is extended or adjusted under 35 U.S.C. 154(b) by 0 days.

This patent is subject to a terminal disclaimer.

(21) Appl. No.: **15/198,668**

(22) Filed: **Jun. 30, 2016**

(65) **Prior Publication Data**

US 2016/0311599 A1 Oct. 27, 2016

Related U.S. Application Data

(63) Continuation-in-part of application No. 14/072,377, filed on Nov. 5, 2013, now Pat. No. 9,394,072, which (Continued)

(51) **Int. Cl.**
B65D 1/02 (2006.01)
B65D 79/00 (2006.01)

(52) **U.S. Cl.**
CPC ***B65D 79/005*** (2013.01); ***B65D 1/0276*** (2013.01); *B65D 2501/0036* (2013.01)

(58) **Field of Classification Search**
CPC B65D 79/005; B65D 1/0276
(Continued)

(56) **References Cited**

U.S. PATENT DOCUMENTS

3,409,167 A 11/1968 Blanchard
3,942,673 A 3/1976 Lyu et al.
(Continued)

FOREIGN PATENT DOCUMENTS

EP 0068718 A1 1/1983
EP 0115380 A1 8/1984
(Continued)

OTHER PUBLICATIONS

International Search Report and Written Opinion dated Feb. 25, 2015 in corresponding International Patent Application Serial No. PCT/US2014/063812.
(Continued)

Primary Examiner — Sue A Weaver
(74) *Attorney, Agent, or Firm* — Harness, Dickey & Pierce, P.L.C.

(57) **ABSTRACT**

A polymeric container including an upper portion defining an opening to an interior volume of the container. A base is movable to accommodate vacuum forces generated within the container, thereby decreasing the volume of the container. A substantially cylindrical sidewall extends between the upper portion and the base. A rigid, central pushup portion of the base is at an axial center of the base. A central longitudinal axis of the container extends through a center of the central pushup portion. A flexible diaphragm of the base extends outward from the central pushup portion.

40 Claims, 26 Drawing Sheets

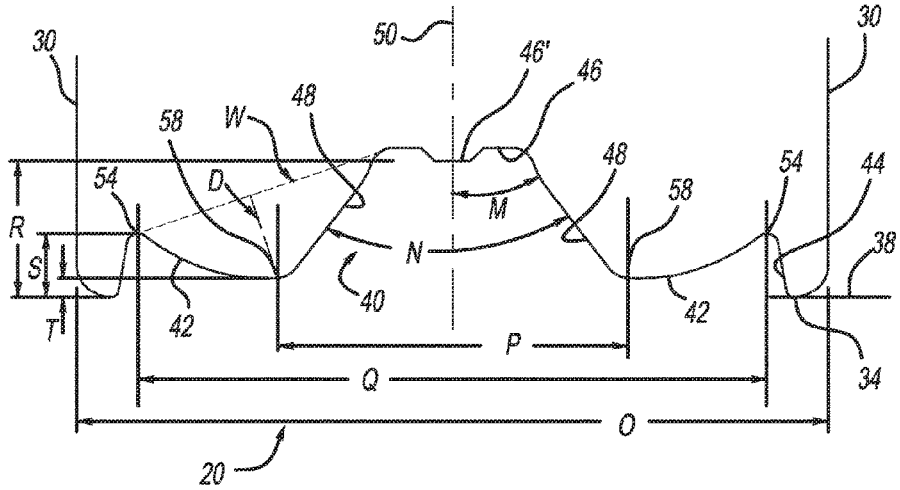

Related U.S. Application Data

is a continuation-in-part of application No. 12/847,050, filed on Jul. 30, 2010, now Pat. No. 8,616,395, which is a continuation-in-part of application No. 12/272,400, filed on Nov. 17, 2008, now Pat. No. 8,276,774, which is a continuation-in-part of application No. 11/151,676, filed on Jun. 14, 2005, now Pat. No. 7,451,886, which is a continuation-in-part of application No. 11/116,764, filed on Apr. 28, 2005, now Pat. No. 7,150,372, which is a continuation of application No. 10/445,104, filed on May 23, 2003, now Pat. No. 6,942,116.

(60) Provisional application No. 61/230,144, filed on Jul. 31, 2009, provisional application No. 61/369,156, filed on Jul. 30, 2010.

(58) **Field of Classification Search**
USPC ..... 215/374, 373, 373 T; 220/609
See application file for complete search history.

(56) **References Cited**

U.S. PATENT DOCUMENTS

4,125,632	A	11/1978	Vosti et al.	
4,174,782	A	11/1979	Obsomer	
4,231,483	A	11/1980	Dechenne et al.	
4,342,398	A	8/1982	Chang	
4,381,061	A	4/1983	Cerny et al.	
4,408,698	A	10/1983	Ballester	
4,431,112	A	2/1984	Yamaguchi	
4,542,029	A	9/1985	Caner et al.	
4,620,639	A	11/1986	Yoshino	
4,667,454	A	5/1987	McHenry et al.	
4,880,129	A	11/1989	McHenry et al.	
4,981,736	A	1/1991	Feddersen et al.	
5,005,716	A	4/1991	Eberle	
5,060,453	A	10/1991	Alberghini et al.	
5,217,737	A	6/1993	Gygax et al.	
5,234,126	A	8/1993	Jonas et al.	
5,492,245	A	2/1996	Kalkanis	
5,503,283	A	4/1996	Semersky	
5,511,966	A	4/1996	Matsui	
5,763,030	A	6/1998	Matsui	
RE36,639	E	4/2000	Okhai	
6,044,996	A	4/2000	Carew et al.	
6,176,382	B1	1/2001	Bazlur Rashid	
6,273,282	B1	8/2001	Ogg et al.	
6,277,321	B1	8/2001	Vailliencourt et al.	
6,299,007	B1	10/2001	Takeuchi	
6,595,380	B2	7/2003	Silvers	
6,612,451	B2	9/2003	Tobias et al.	
6,857,531	B2	2/2005	Slat et al.	
6,920,992	B2	7/2005	Lane et al.	
6,942,116	B2	9/2005	Lisch et al.	
6,983,858	B2	1/2006	Slat et al.	
7,077,279	B2	7/2006	Melrose	
7,080,747	B2	7/2006	Lane et al.	
7,150,372	B2	12/2006	Lisch et al.	
7,191,910	B2	3/2007	Deemer et al.	
7,198,164	B2	4/2007	Yourist et al.	
7,198,165	B2	4/2007	Zhang	
7,258,244	B2	8/2007	Ungrady	
7,451,886	B2	11/2008	Lisch et al.	
7,543,713	B2	6/2009	Trude et al.	
7,735,300	B2	6/2010	Outreman	
7,861,876	B2	1/2011	Stowitts	
7,900,425	B2	3/2011	Bysick et al.	
8,276,774	B2	10/2012	Patcheak et al.	
8,308,006	B2	11/2012	Nievierowski et al.	
8,616,395	B2 *	12/2013	Patcheak	B65D 1/0276 215/373
8,833,579	B2 *	9/2014	Patcheak	B65D 1/0276 215/373
9,085,387	B2 *	7/2015	Kurihara	B65D 1/0276
9,394,072	B2 *	7/2016	Patcheak	B65D 1/0276
2002/0063105	A1	5/2002	Darr et al.	
2002/0153343	A1	10/2002	Tobias et al.	
2003/0116525	A1 *	6/2003	Futral	B65D 1/0276 215/373
2004/0155008	A1	8/2004	Lane et al.	
2004/0211746	A1	10/2004	Trude	
2005/0247664	A1	11/2005	Lane et al.	
2006/0006133	A1	1/2006	Lisch et al.	
2007/0187355	A1	8/2007	Kamineni	
2008/0047964	A1	2/2008	Denner et al.	
2008/0073316	A1	3/2008	Stowitts	
2010/0006533	A1	1/2010	Nievierowski et al.	
2010/0163513	A1	7/2010	Pedmo	
2011/0011825	A1	1/2011	Howell et al.	
2011/0017700	A1	1/2011	Patcheak et al.	
2011/0233166	A1	9/2011	Hiromichi et al.	
2012/0273453	A1	11/2012	Melrose	
2013/0180998	A1 *	7/2013	Nakayama	B65D 1/0284 220/609
2013/0193101	A1	8/2013	Harris et al.	
2014/0131368	A1	5/2014	Dygert et al.	
2016/0167824	A1 *	6/2016	Wright	B65D 1/0276 215/376

FOREIGN PATENT DOCUMENTS

EP	0322651	A2	7/1989
EP	1328443	A1	7/2003
EP	1947016	A2	7/2008
EP	2623427	A1	8/2013
JP	S5717730	A	1/1982
JP	S59174425	A	10/1984
JP	S6148111	U	3/1986
JP	S62-146137	A	6/1987
JP	S62147136	A	7/1987
JP	S62235041	A	10/1987
JP	H01167078	A	6/1989
JP	H0285143	A	3/1990
JP	H0397014	U	10/1991
JP	H03100788	U	10/1991
JP	H08133260	A	5/1996
JP	H08156904	A	6/1996
JP	02517132	Y2	11/1996
JP	H10181734	A	7/1998
JP	2000128140	A	5/2000
JP	2000229615	A	8/2000
JP	2002308245	A	10/2002
JP	3423452	B2	7/2003
JP	2005280755	A	10/2005
JP	2007269392	A	10/2007
JP	2008024314	A	2/2008
JP	2008050036	A	3/2008
JP	2009057074	A	3/2009
WO	WO-0218213	A1	3/2002
WO	WO-02085755	A1	10/2002
WO	WO-2004/028910	A1	4/2004
WO	WO-2004106175	A1	12/2004
WO	WO-2006118584	A1	11/2006
WO	WO-2007047574	A1	4/2007
WO	WO-2009120988	A2	10/2009
WO	WO-2009135046	A1	11/2009
WO	WO-2012129559	A2	9/2012

OTHER PUBLICATIONS

Office Action dated Mar. 25, 2015 in corresponding European Patent Application Serial No. 10805103.

Office Action dated Jan. 29, 2013 in corresponding Chinese Patent Application No. 200980145391.3 with English translation (fifteen pages).

Official Action dated May 14, 2013 in corresponding Colombian Patent Application No. 12-13760 (seven pages).

Office Action dated Sep. 4, 2012 in corresponding Japanese Patent Application No. 2010-279791 with English translation (seven pages).

(56) **References Cited**

OTHER PUBLICATIONS

Office Action dated Sep. 4, 2012 in corresponding Japanese Patent Application No. 2010-268769 with English translation (eight pages).
Supplementary European Search Report mailed Feb. 27, 2012 from corresponding European Patent Application No. EP 09826545 (six pages).
International Search Report and Written Opinion dated Apr. 11, 2011 from corresponding International Patent Application No. PCT/US2010/043885.
International Search Report, International Application No. PCT/NZ03/00220, Mailing Date Nov. 27, 2003, Authorized Officer Adriano Giacobetti.
Supplementary European Search Report issued on Apr. 19, 2017 in corresponding European Patent Application No. 148594773 (7 pages).

* cited by examiner

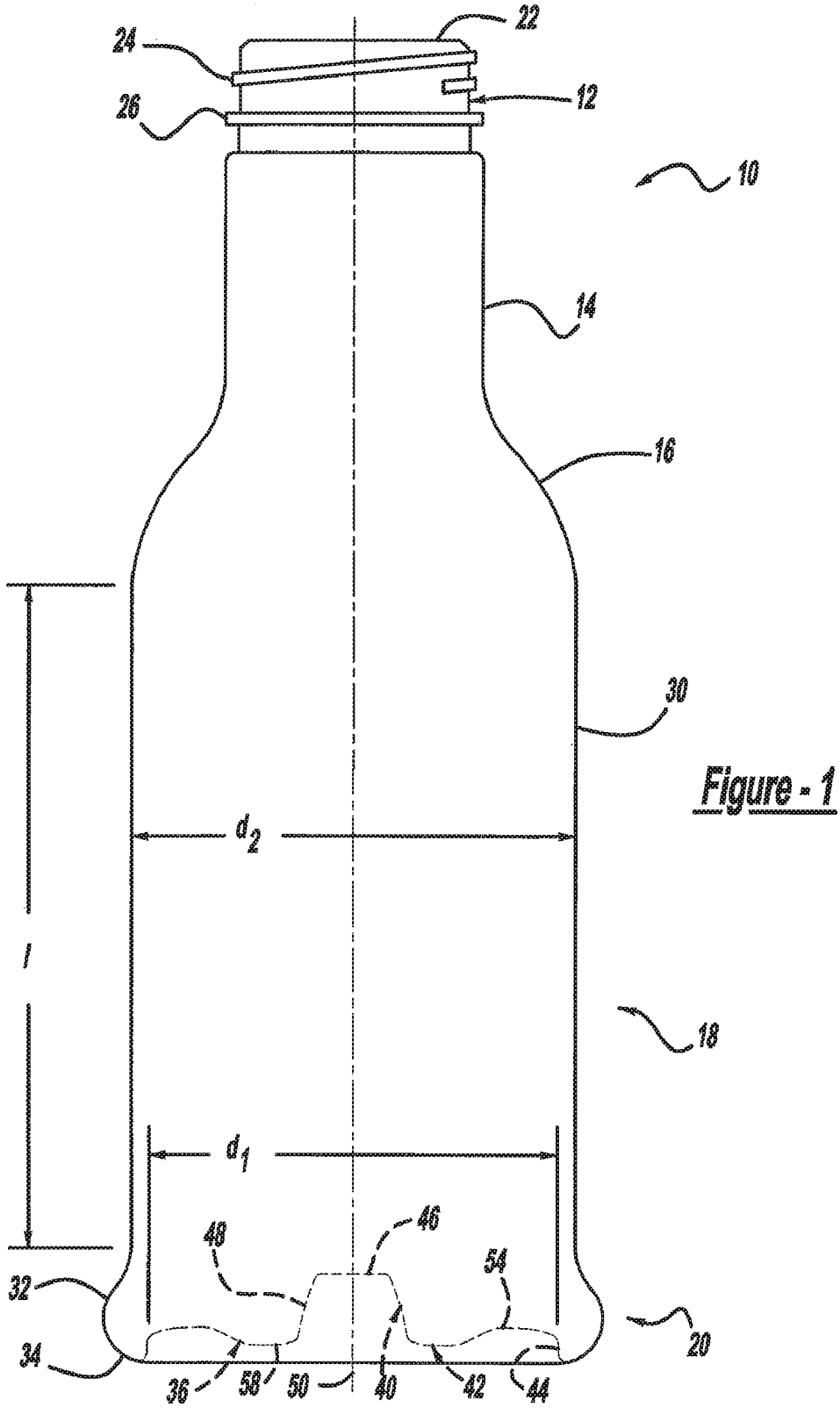

Figure - 1

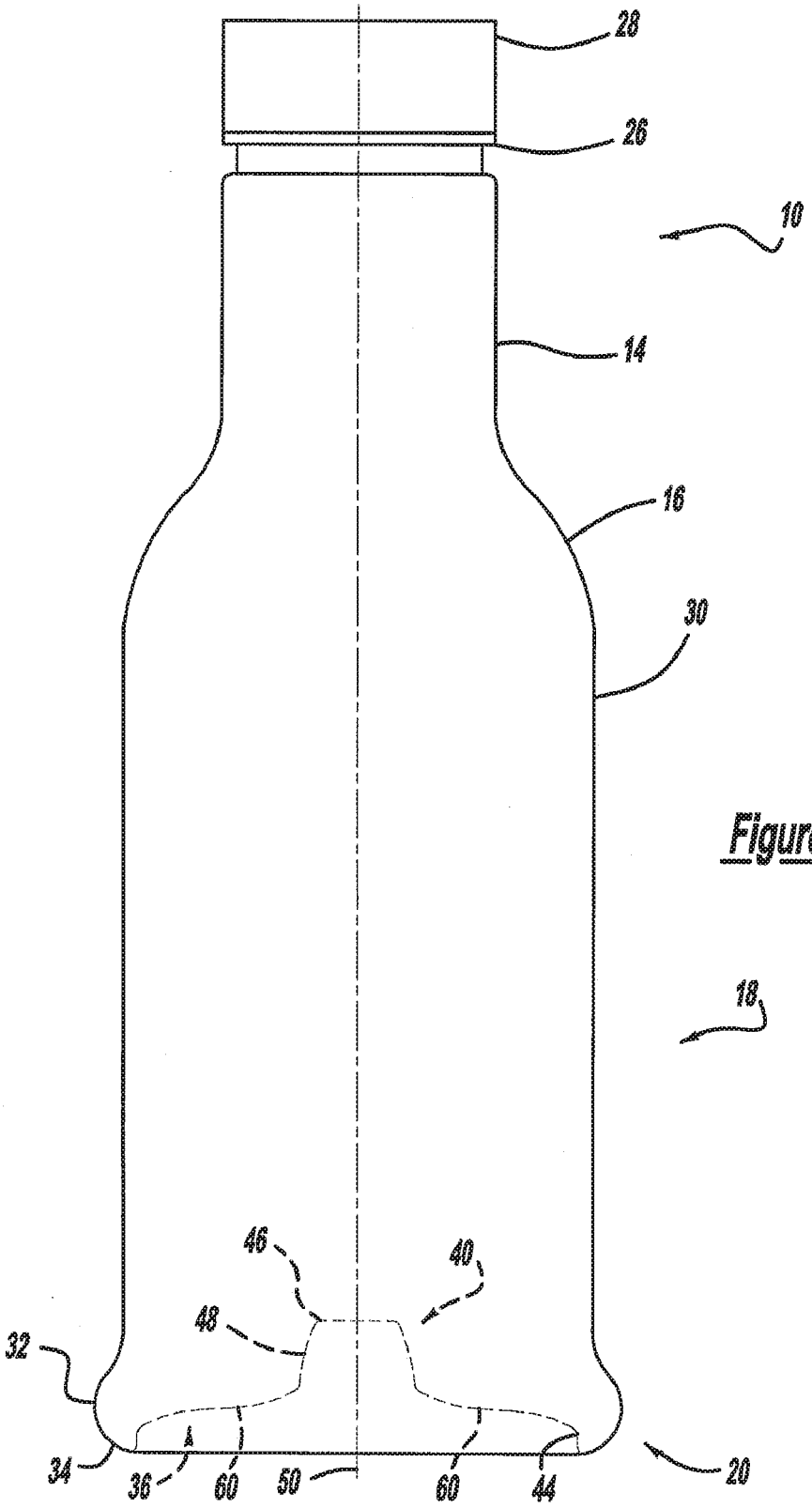

Figure - 2

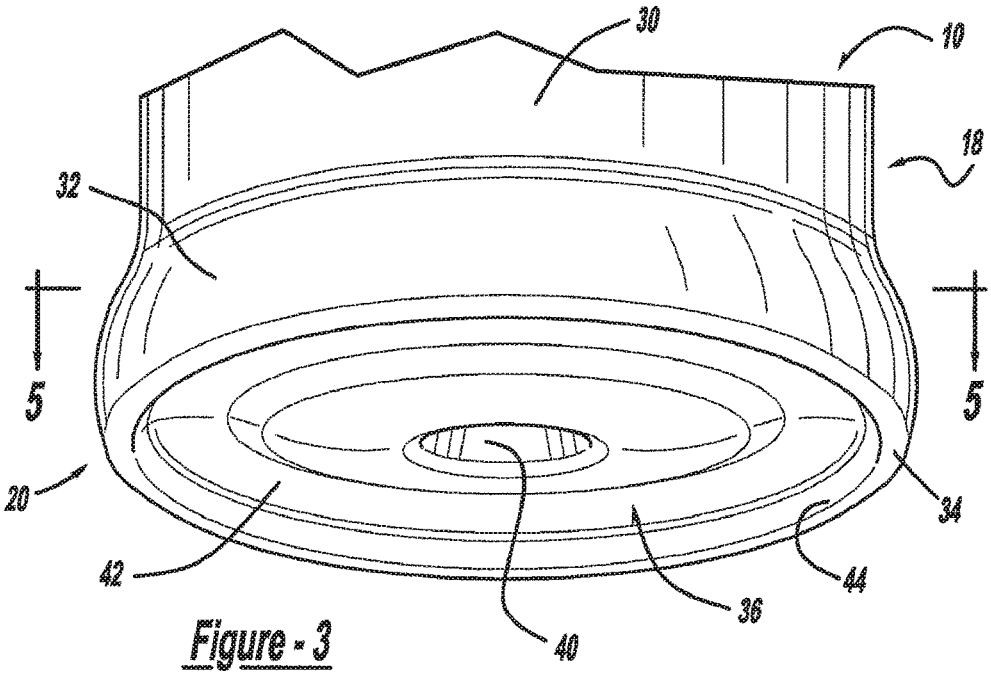

Figure - 3

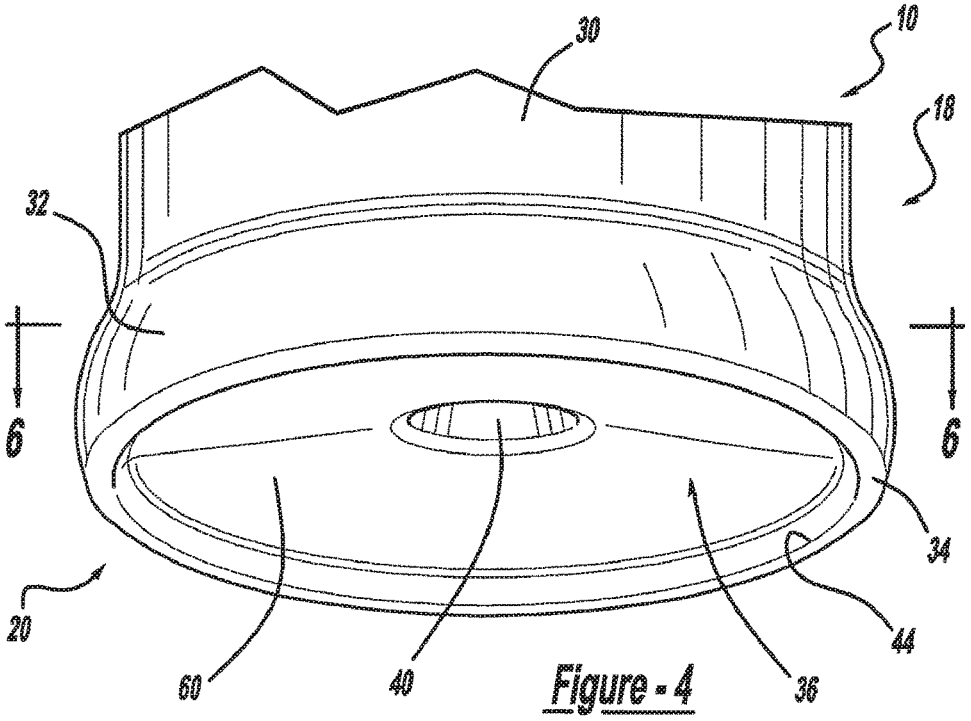

Figure - 4

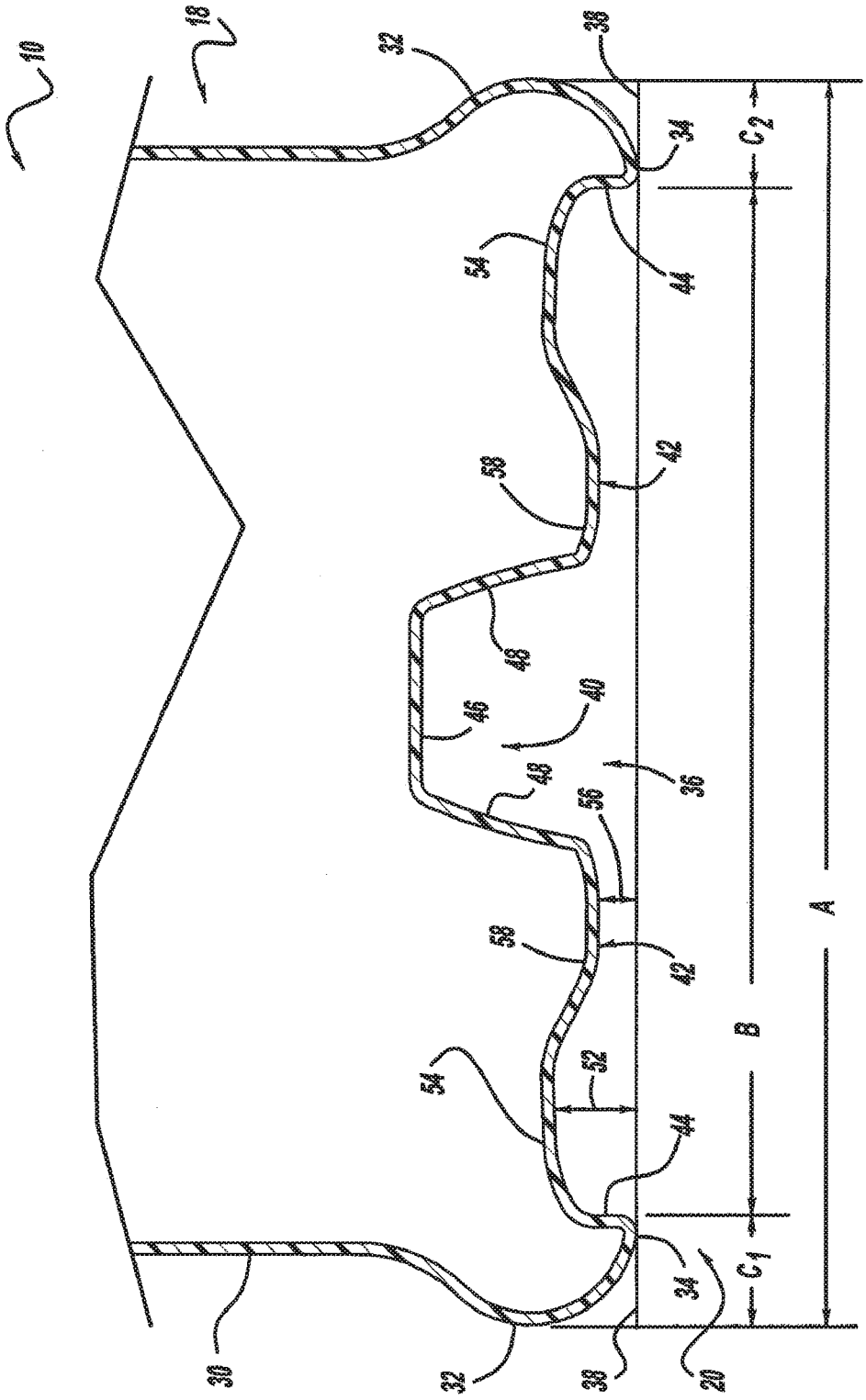

Figure - 5

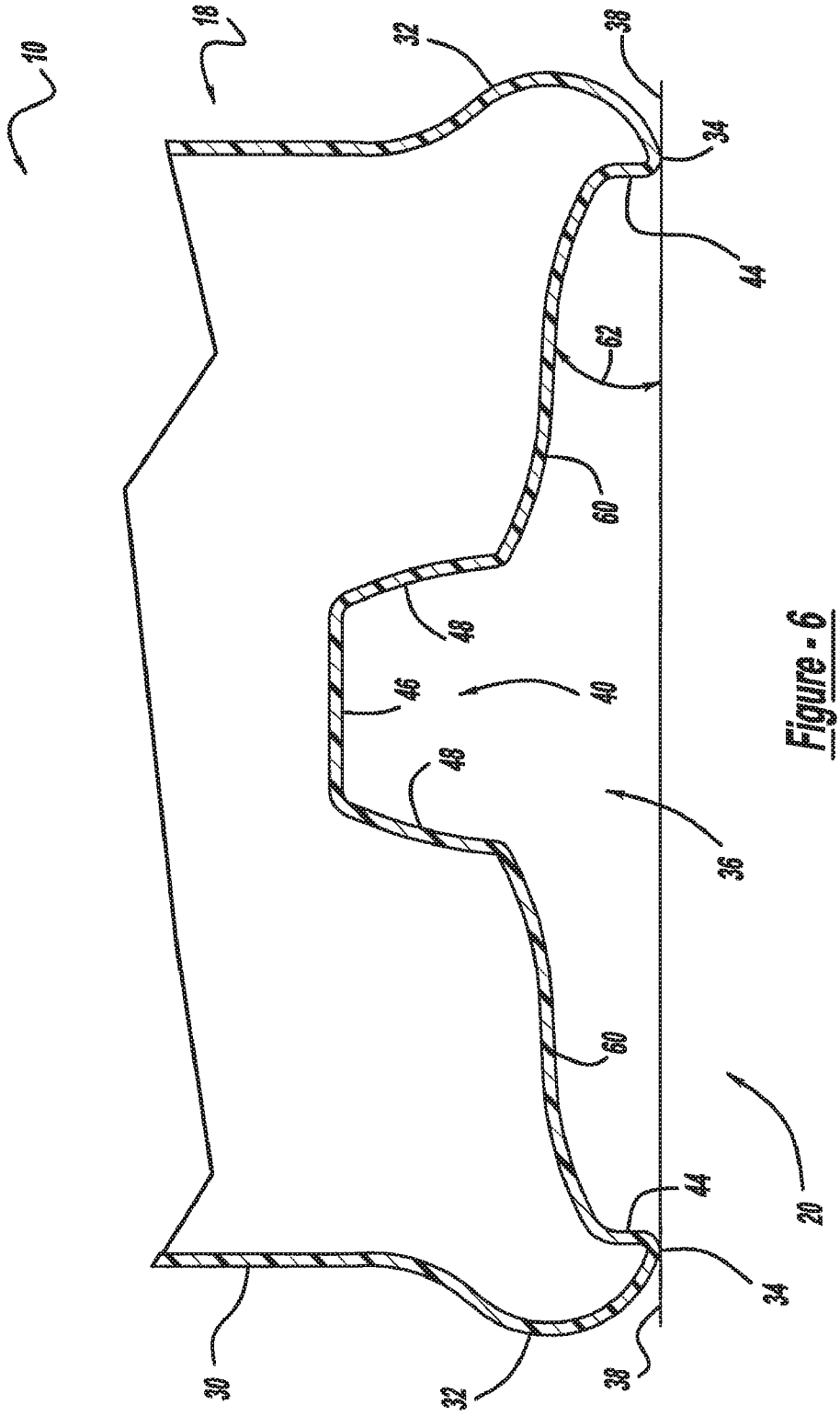

Figure - 6

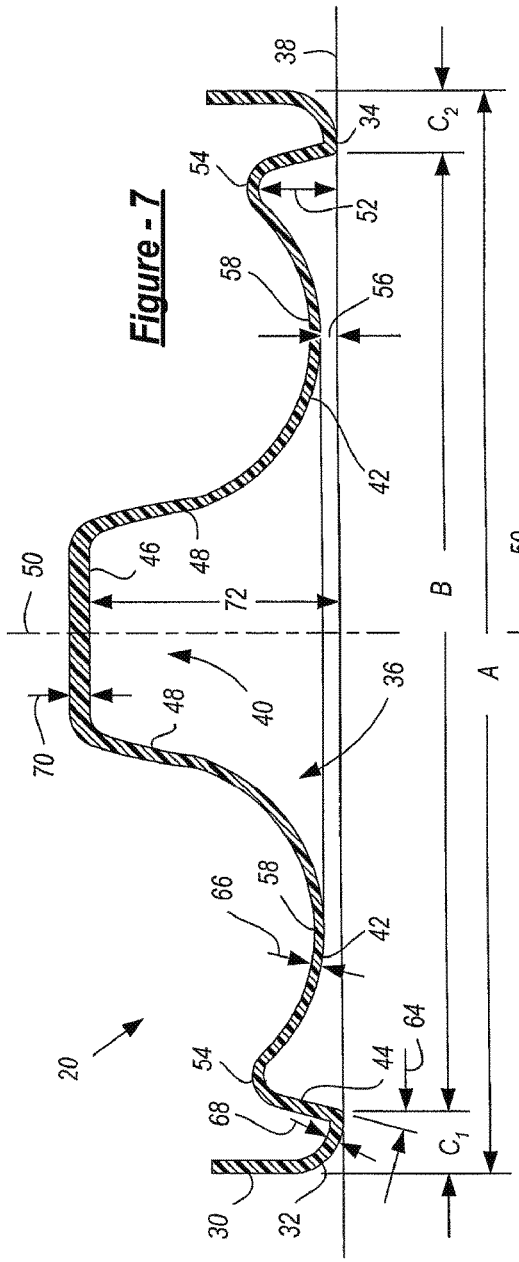
Figure - 7
20
30
32
38
34
54
52
58
56
42
46
48
50
72
70
40
36
66
68
44
64
C_1
C_2
A
B

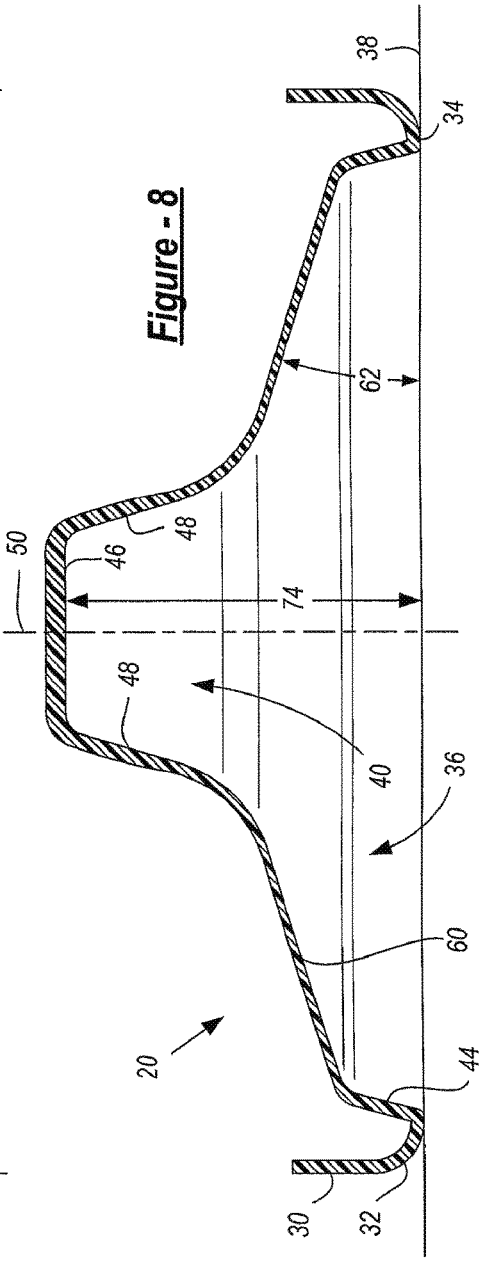
Figure - 8
20
30
32
38
34
62
48
46
50
74
40
36
60
44

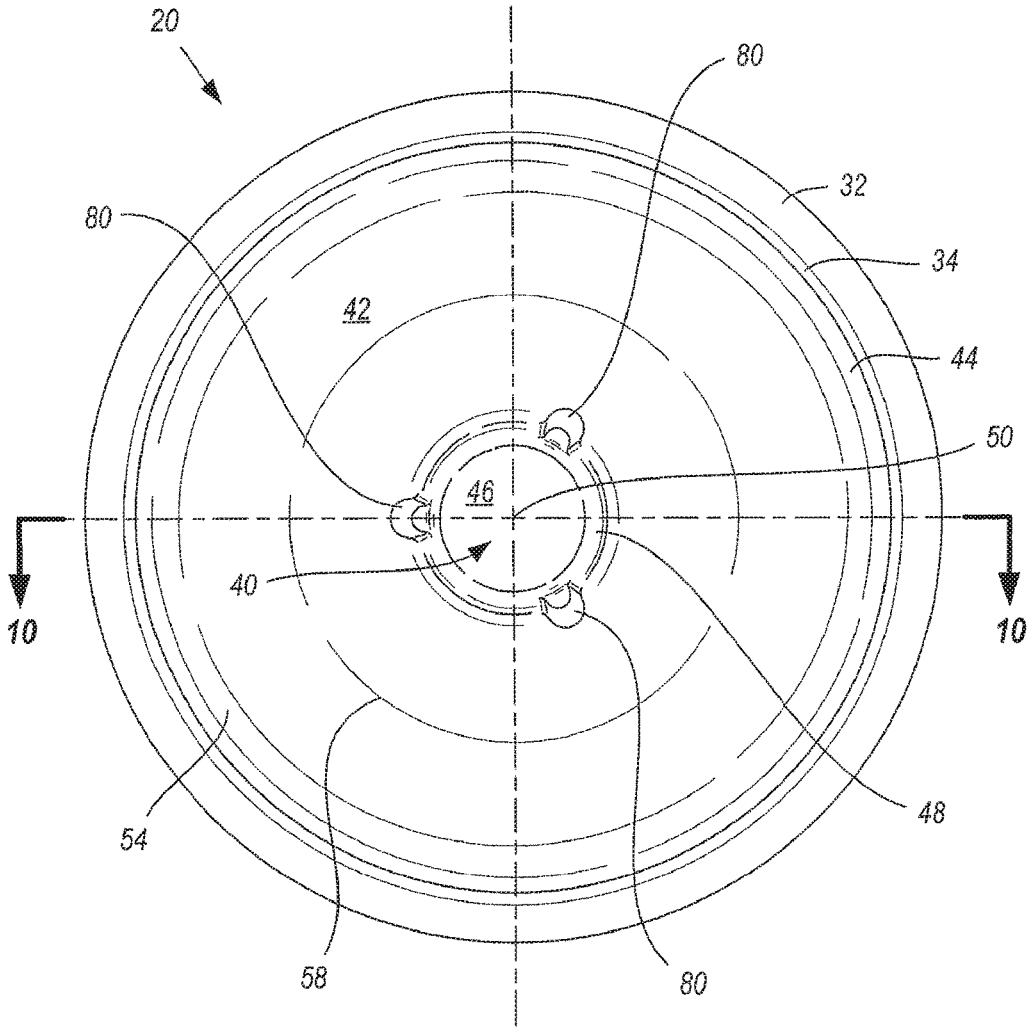

Figure - 9

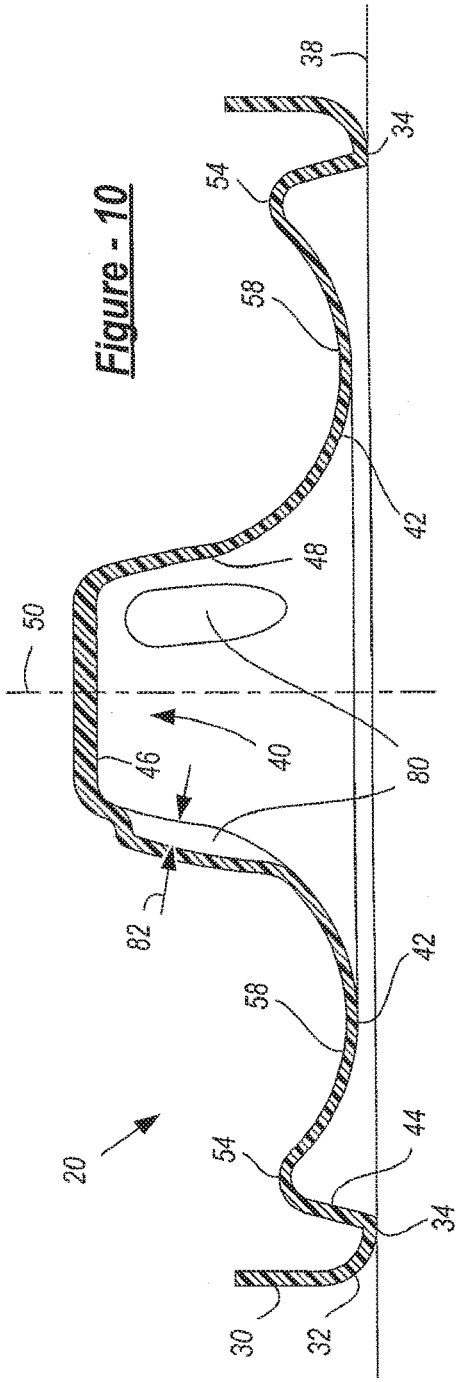

Figure - 10

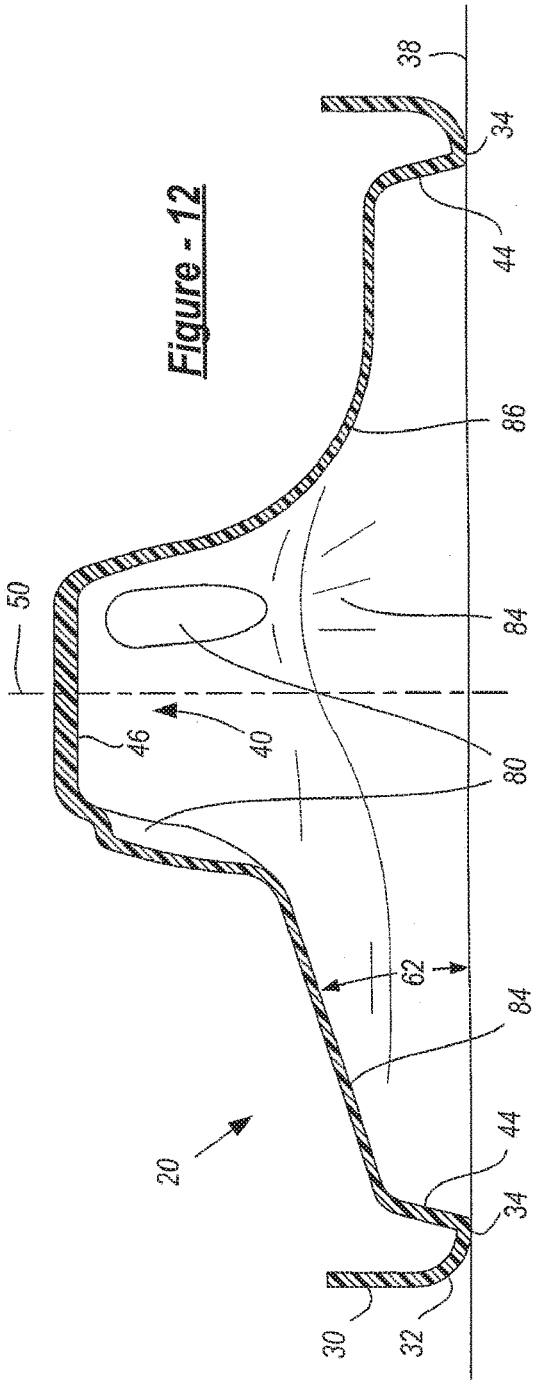

Figure - 12

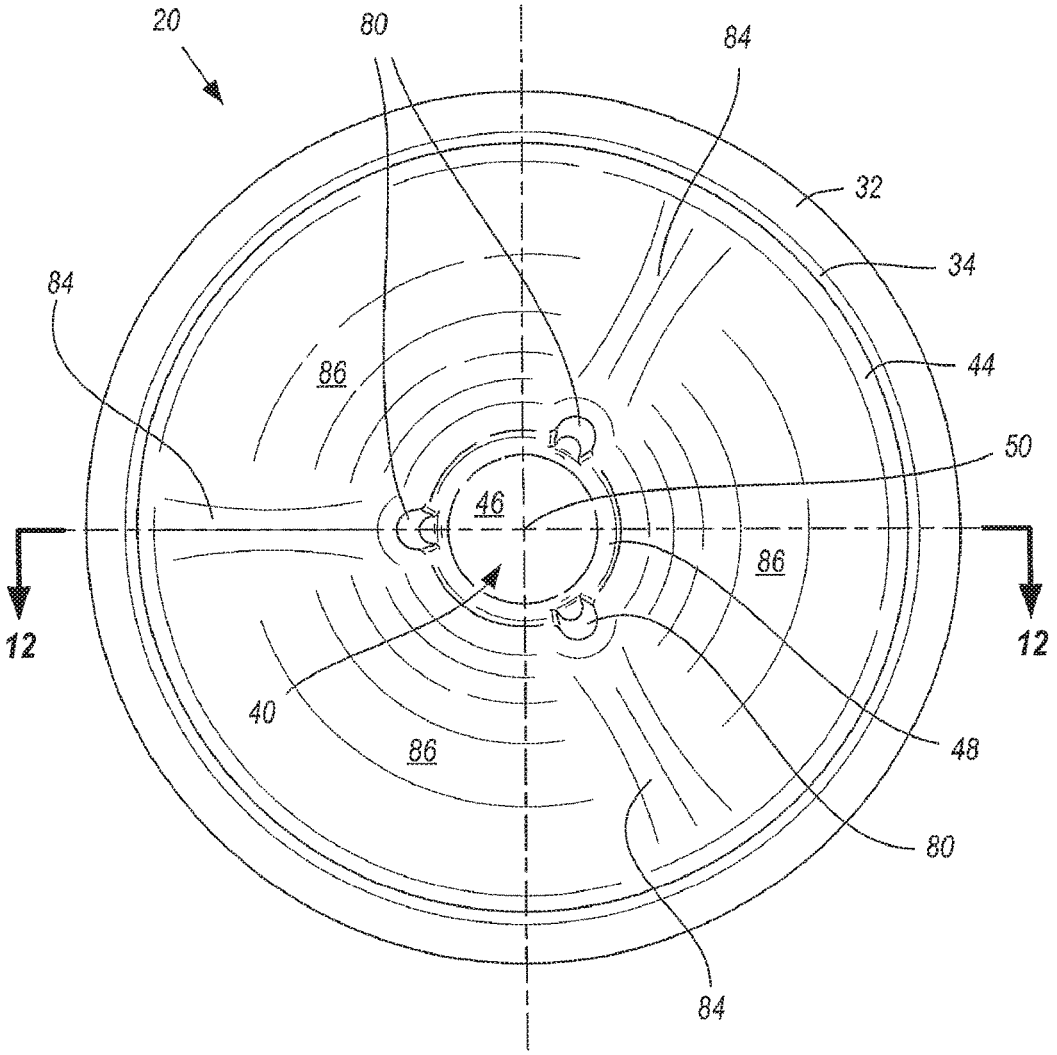

Figure - 11

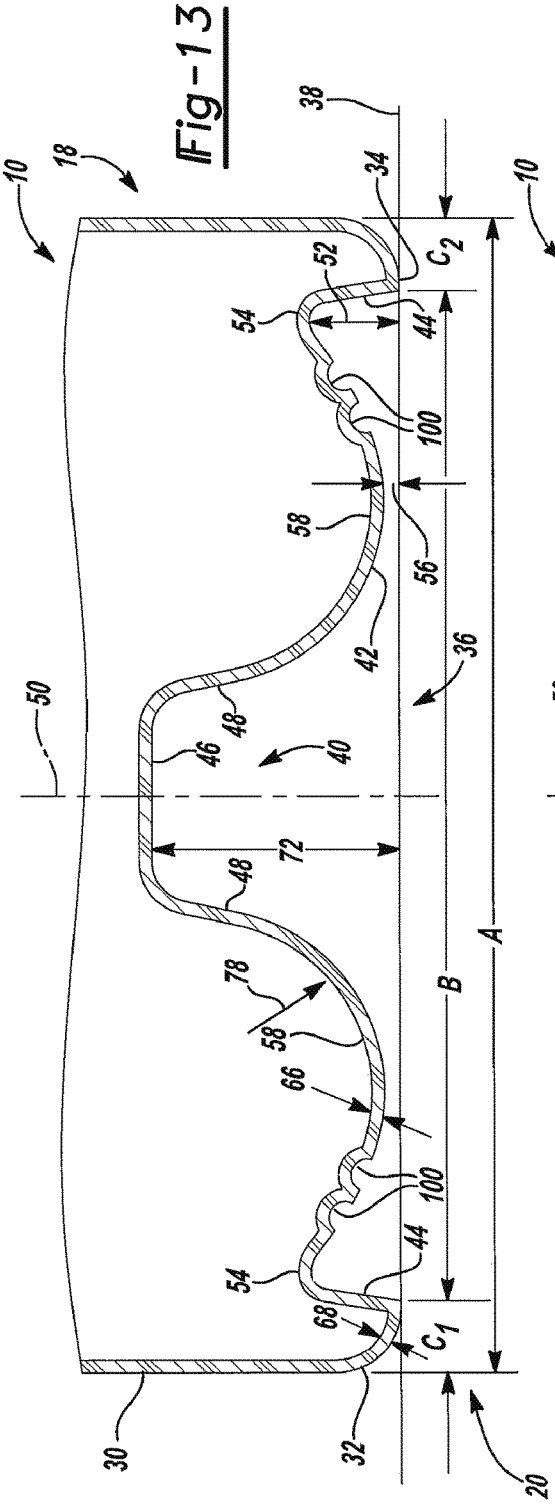
10
18
38
34
52
54
44
100
58
56
42
36
50
48
46
40
72
78
66
68
C_1
C_2
A
B
30
32
20

Fig-13

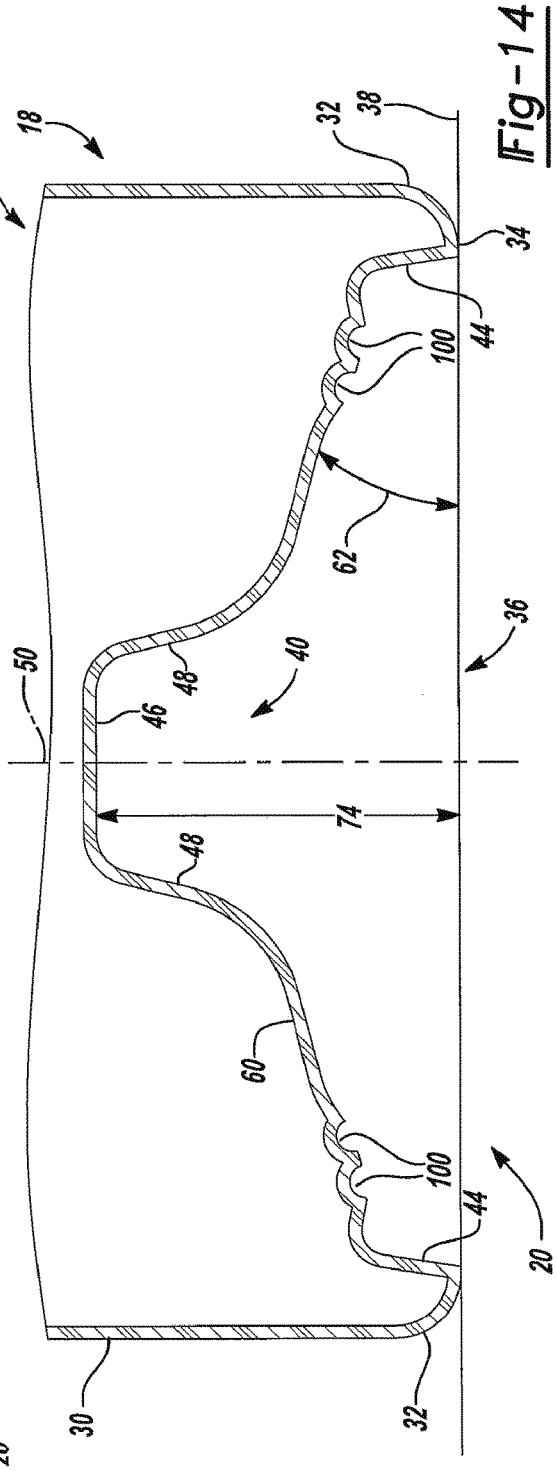
10
18
32
38
34
44
100
62
36
50
48
46
40
74
60
30
20

Fig-14

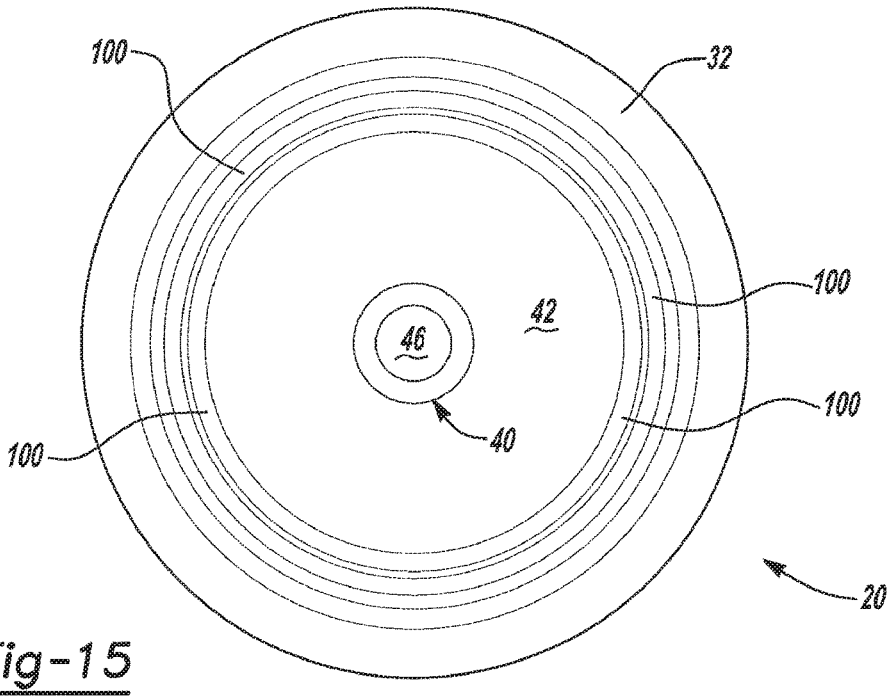

Fig-15

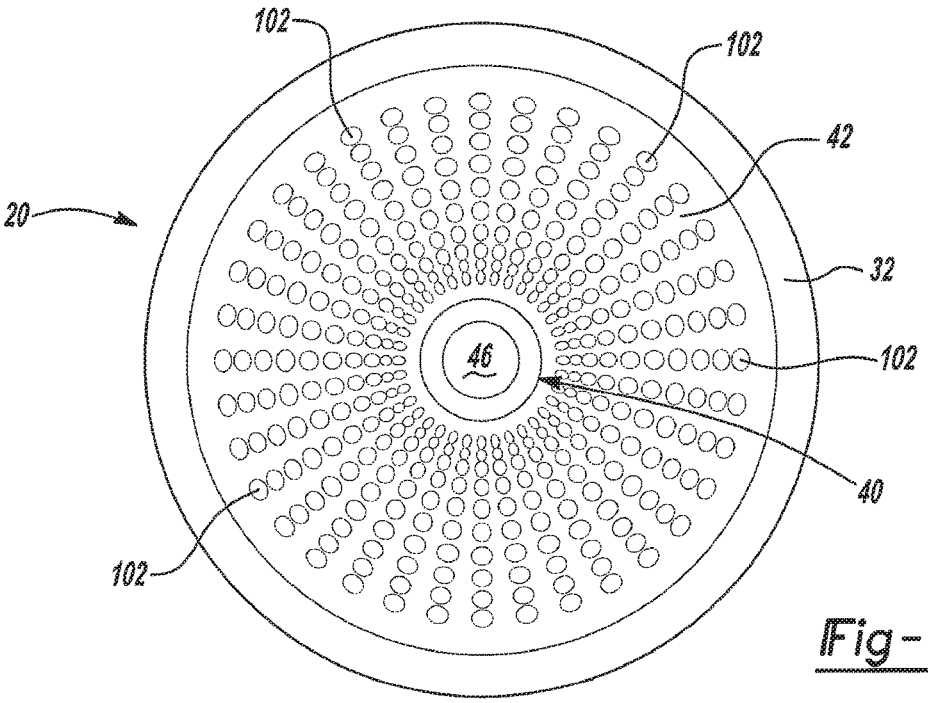

Fig-18

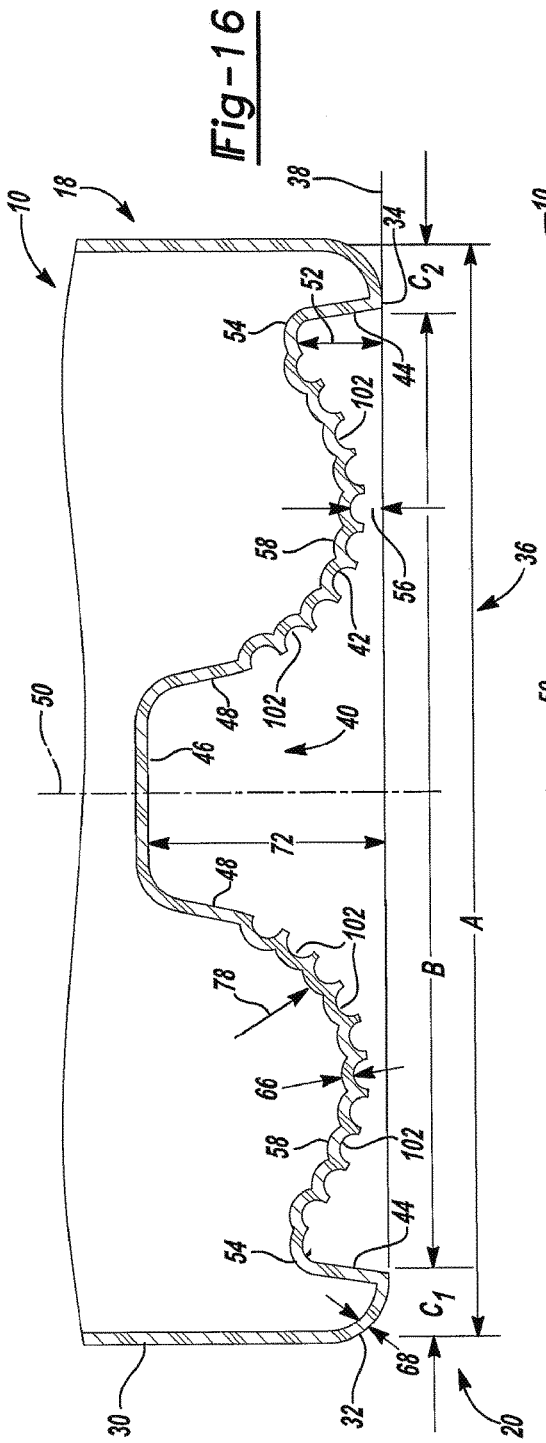
10
18
38
34
C_2
52
54
44
102
58
56
36
42
50
48
102
40
46
72
48
102
78
66
58
102
44
54
C_1
68
30
32
20
B
A

Fig-16

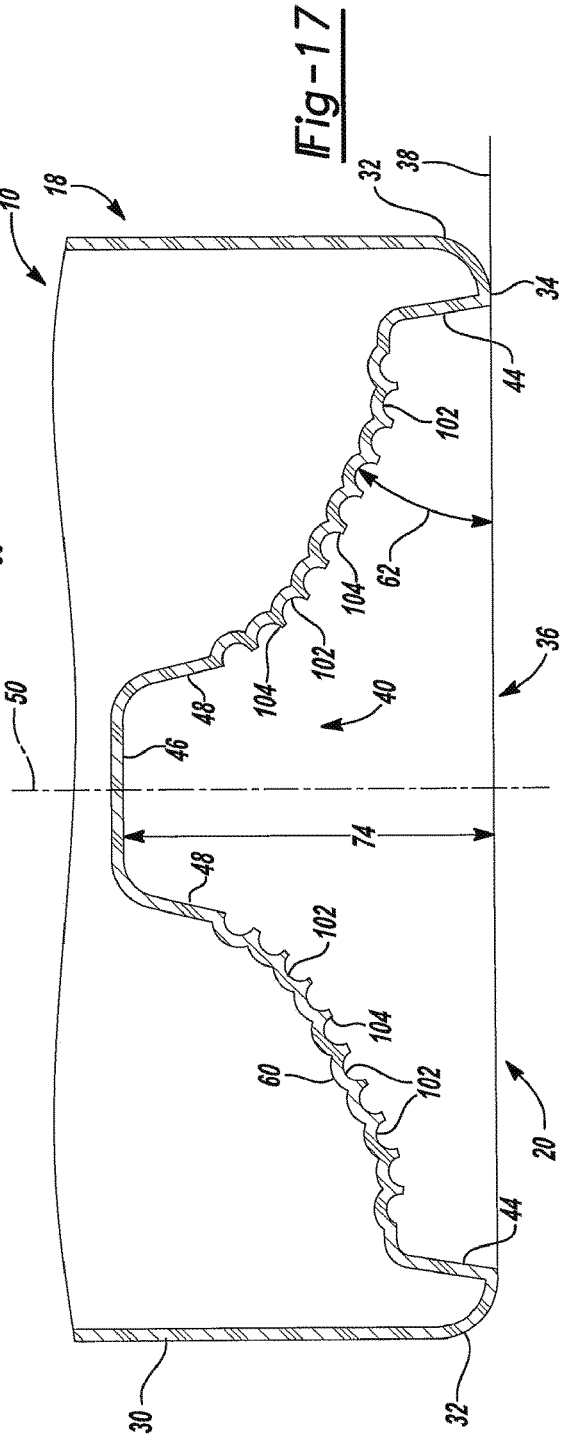
10
18
32
38
34
44
102
62
104
102
36
104
40
48
46
50
74
48
102
104
60
102
20
44
30
32

Fig-17

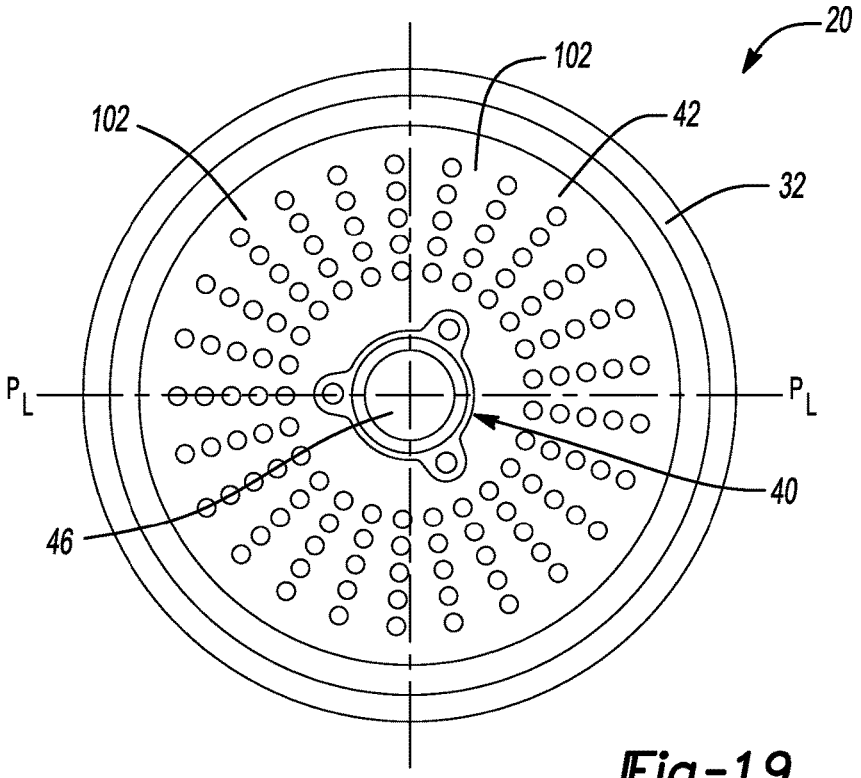

Fig-19

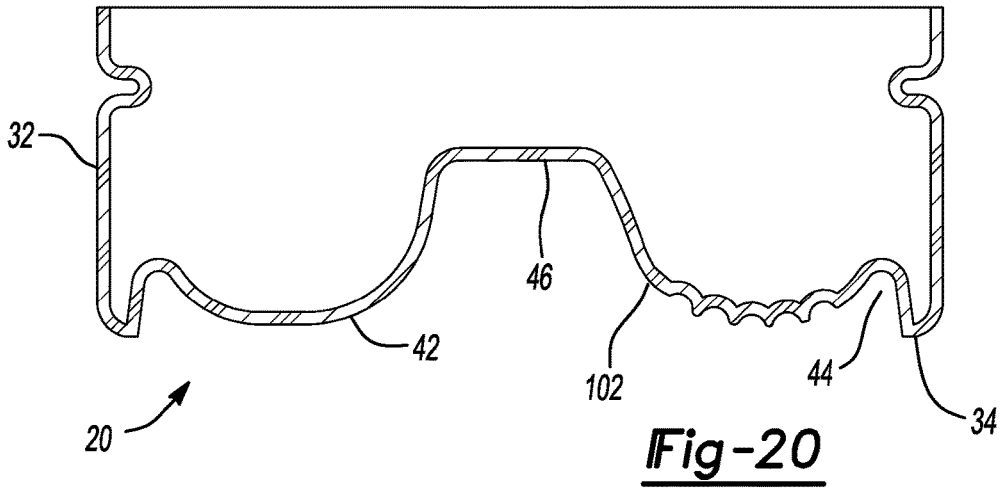

Fig-20

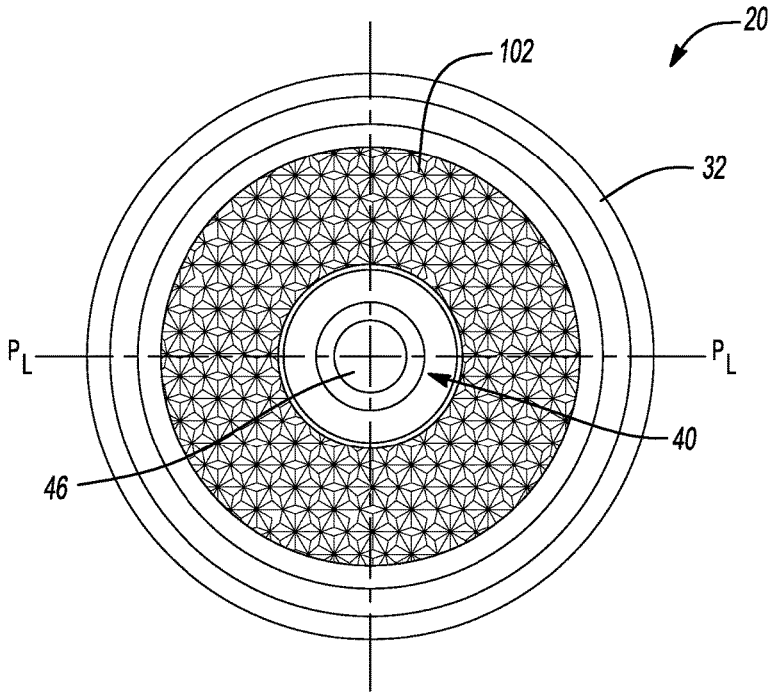

Fig-21

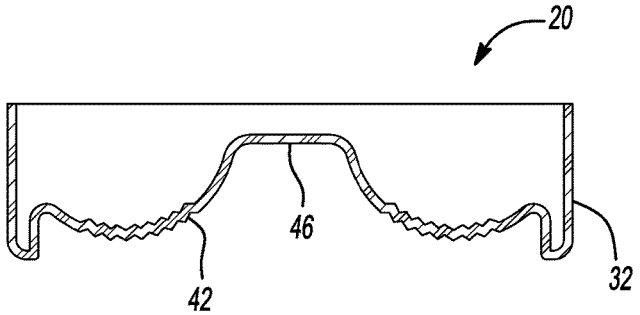

Fig-22

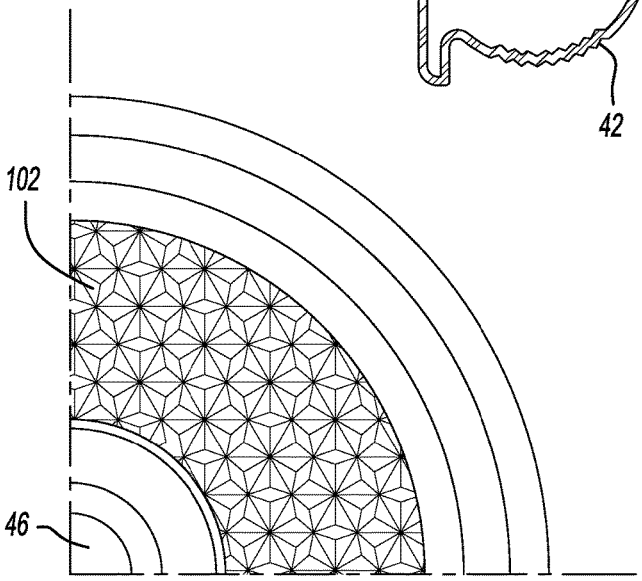

Fig-23

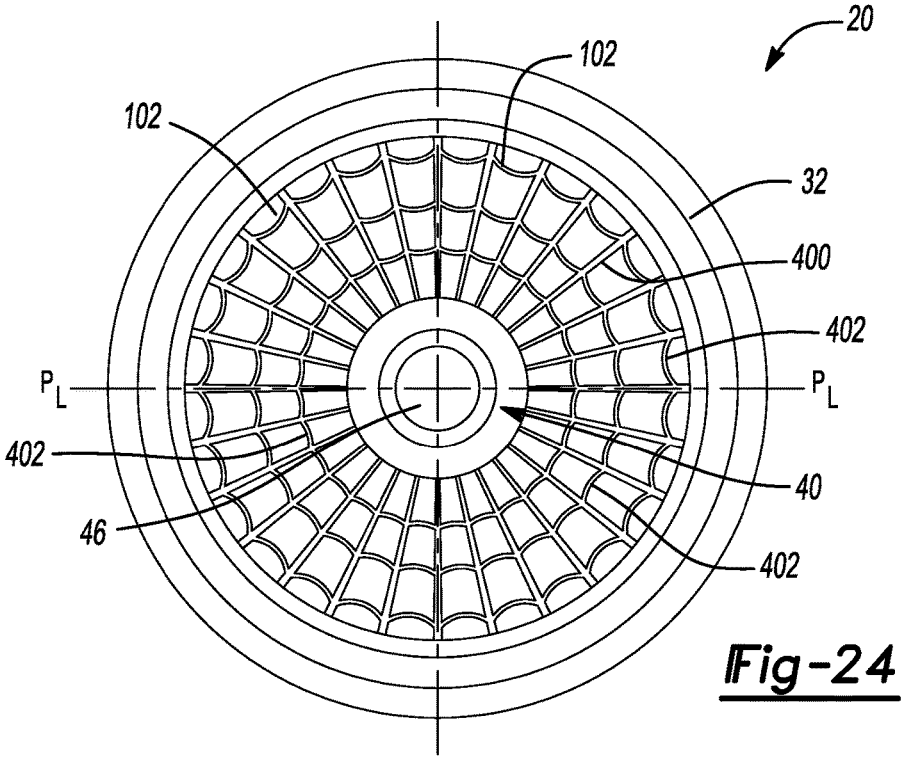

Fig-24

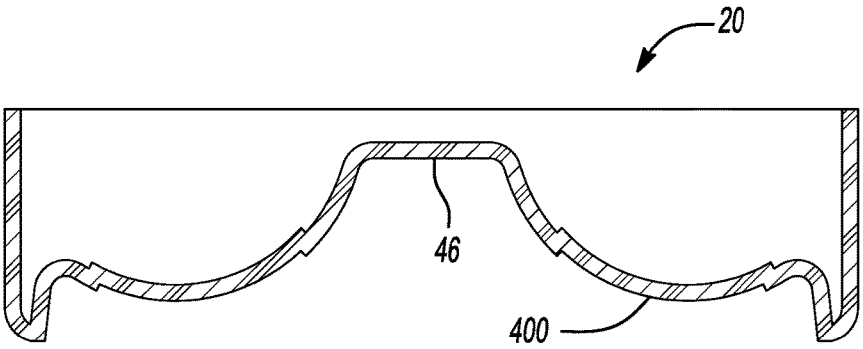

Fig-25

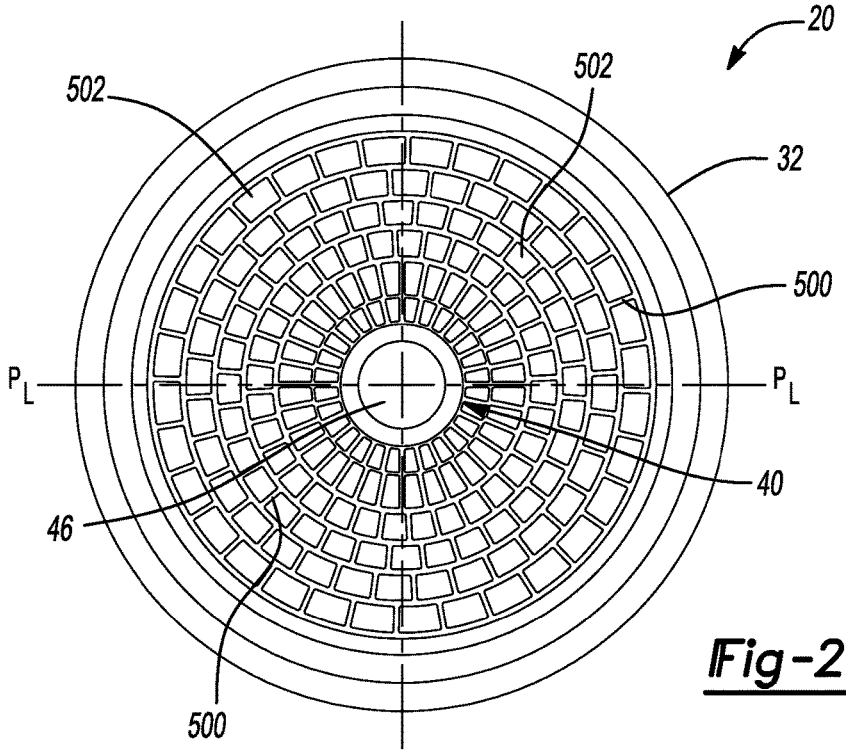

Fig-26

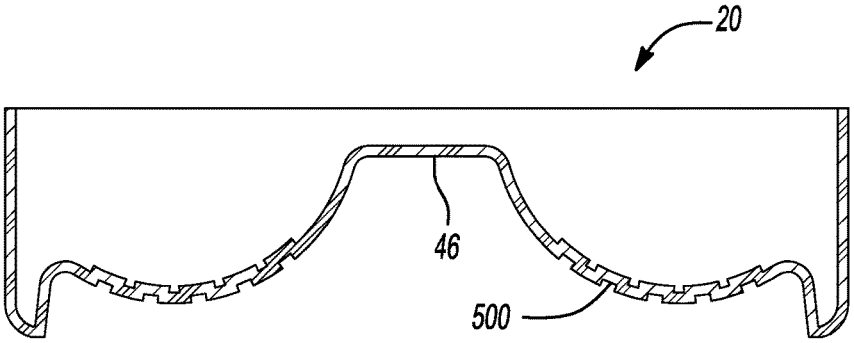

Fig-27

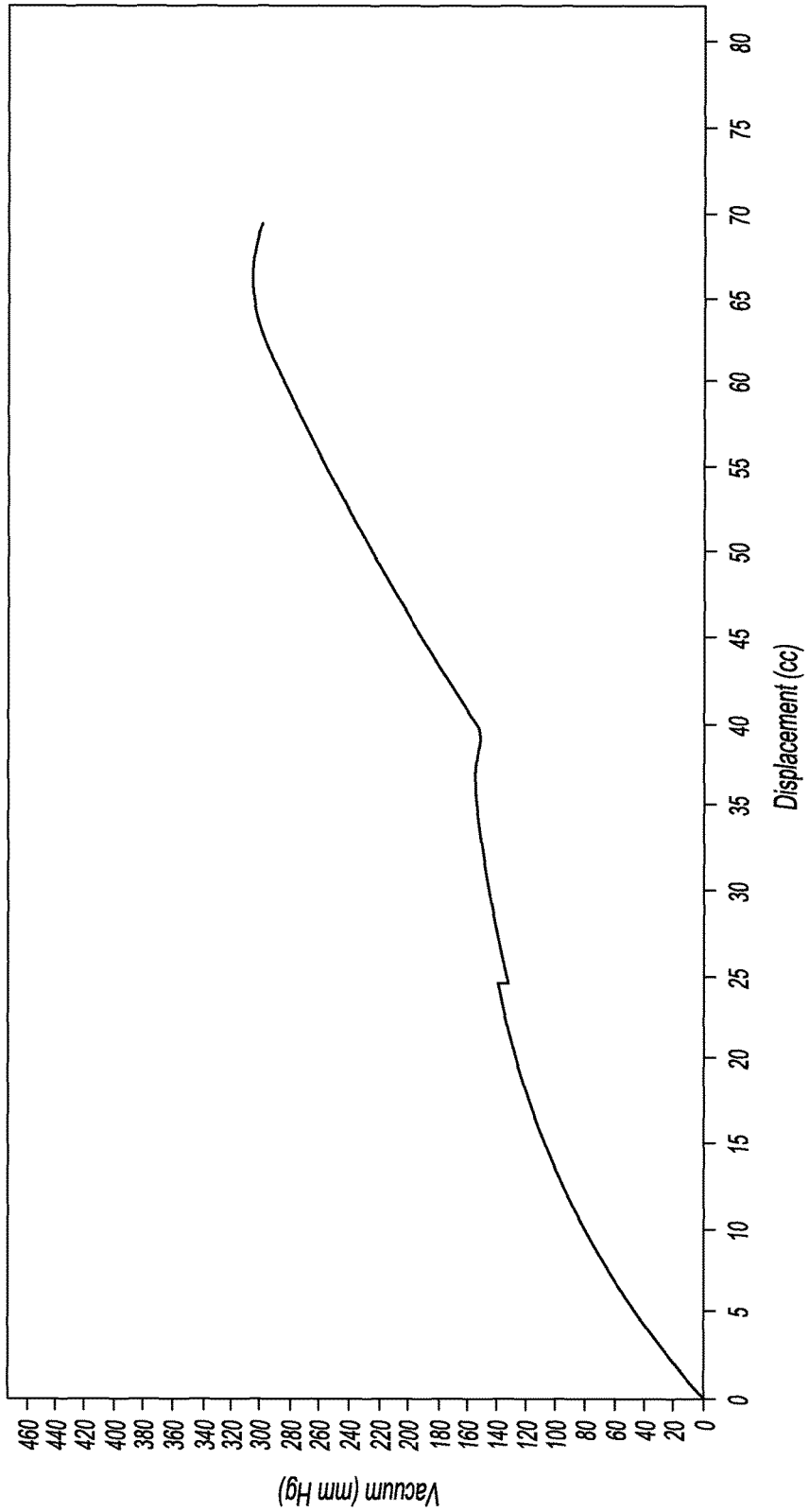
Vacuum (mm Hg)
460
440
420
400
380
360
340
320
300
280
260
240
220
200
180
160
140
120
100
80
60
40
20
0
0
5
10
15
20
25
30
35
40
45
50
55
60
65
70
75
80
Displacement (cc)

Fig-28

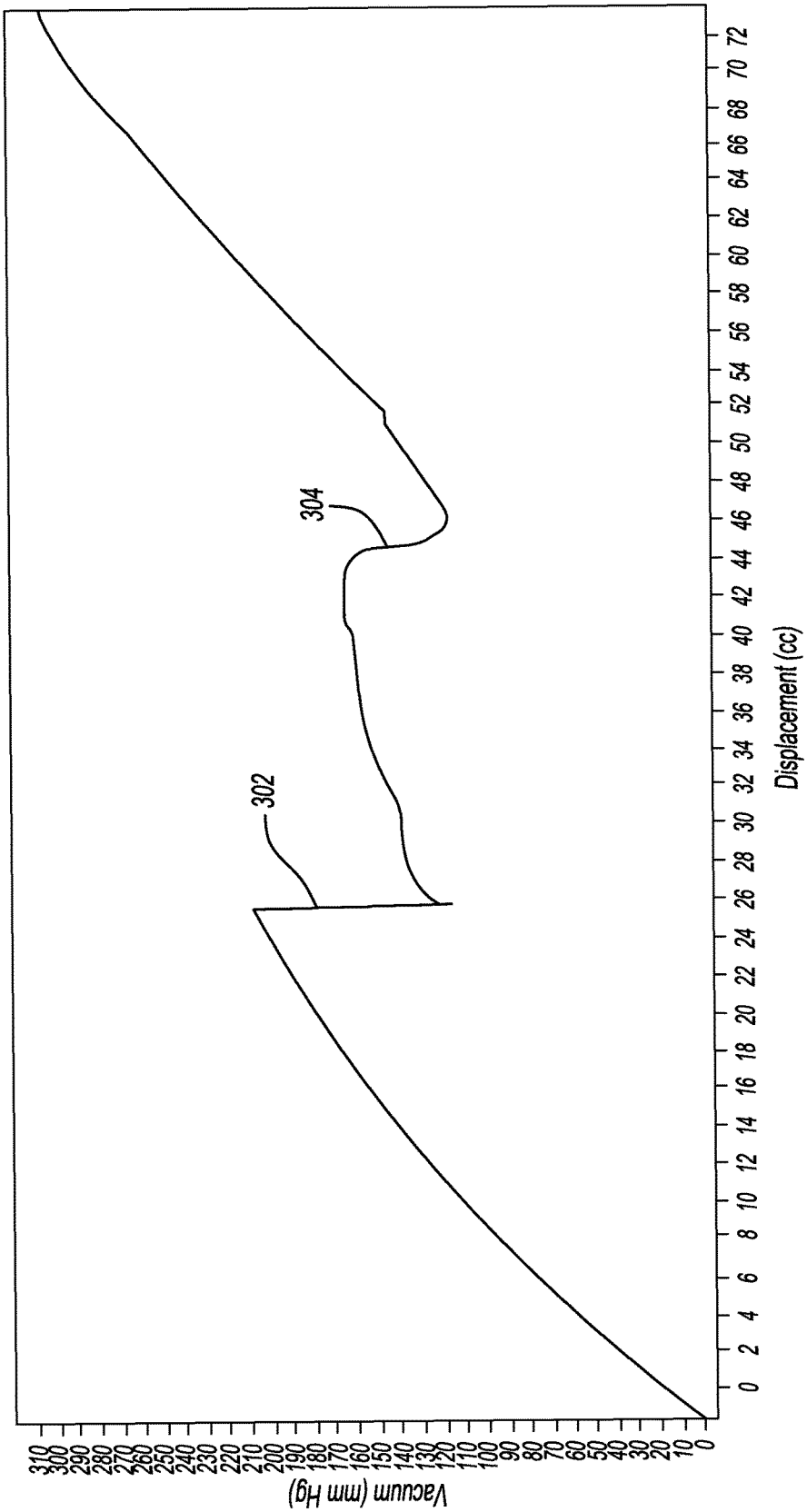
Vacuum (mm Hg)
310
300
290
280
270
260
250
240
230
220
210
200
190
180
170
160
150
140
130
120
110
100
90
80
70
60
50
40
30
20
10
0
302
304
0 2 4 6 8 10 12 14 16 18 20 22 24 26 28 30 32 34 36 38 40 42 44 46 48 50 52 54 56 58 60 62 64 66 68 70 72
Displacement (cc)

Fig-29

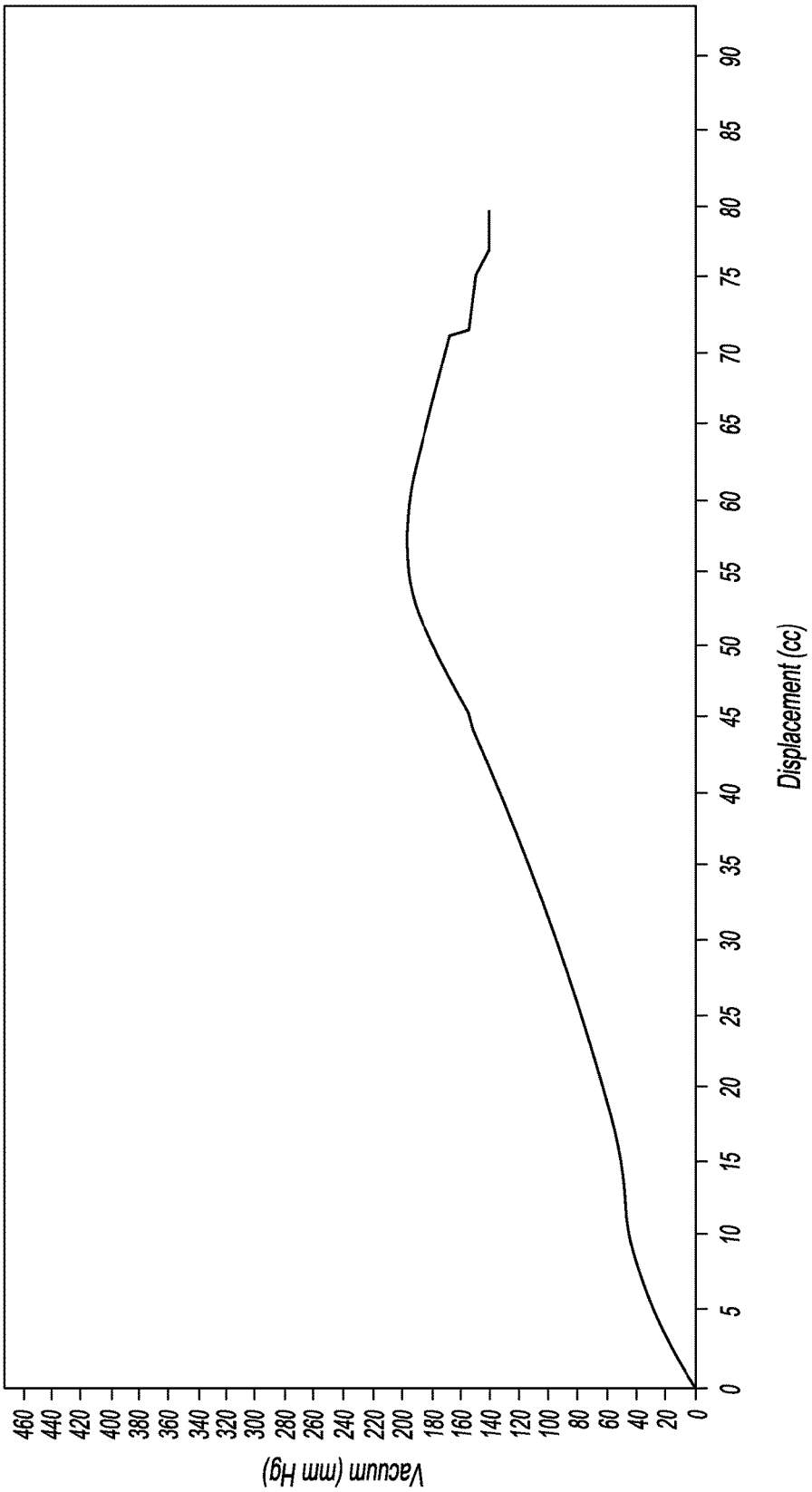
Vacuum (mm Hg)
460
440
420
400
380
360
340
320
300
280
260
240
220
200
180
160
140
120
100
80
60
40
20
0
0
5
10
15
20
25
30
35
40
45
50
55
60
65
70
75
80
85
90
Displacement (cc)

Fig-30

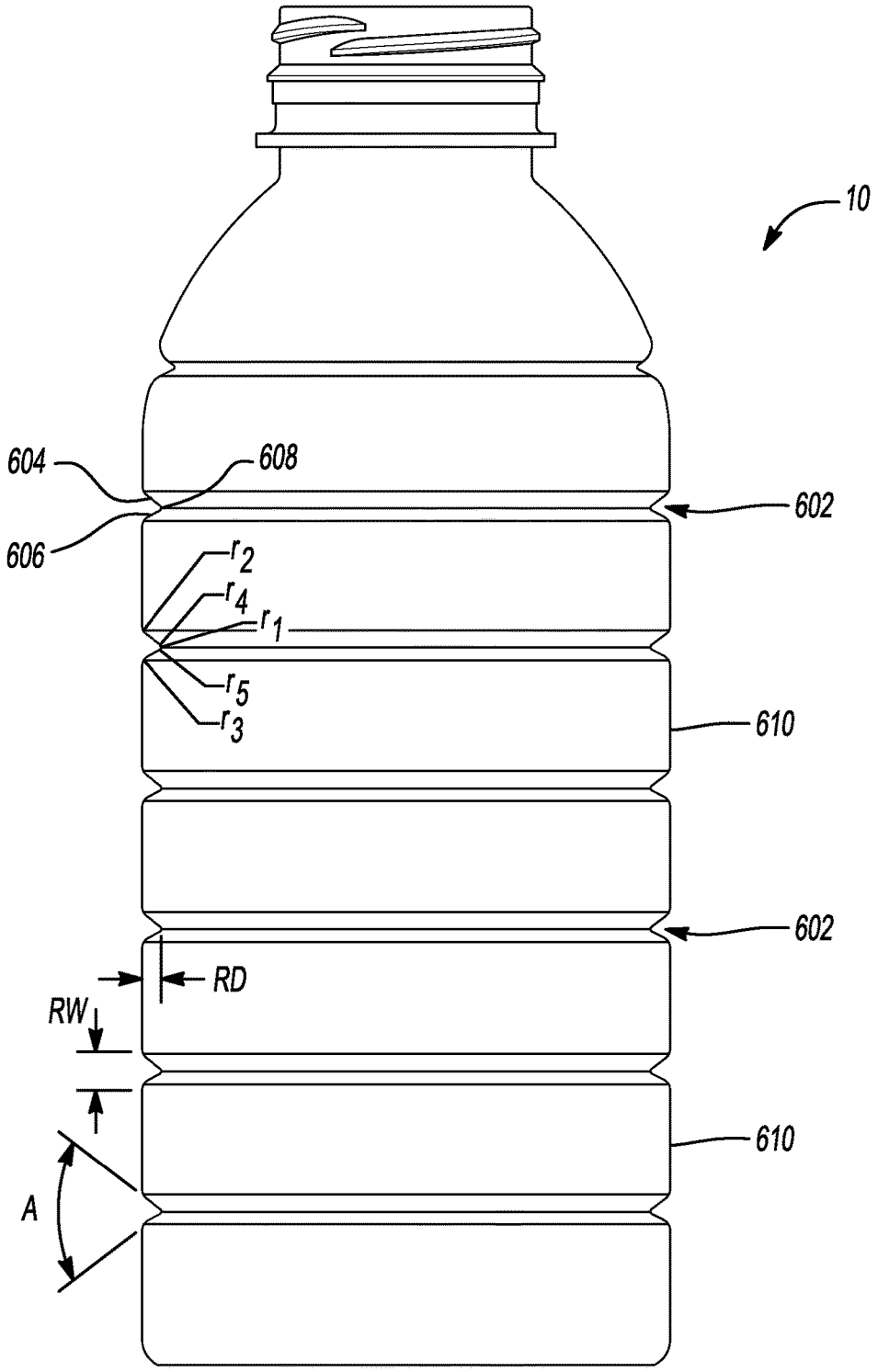

Fig-31

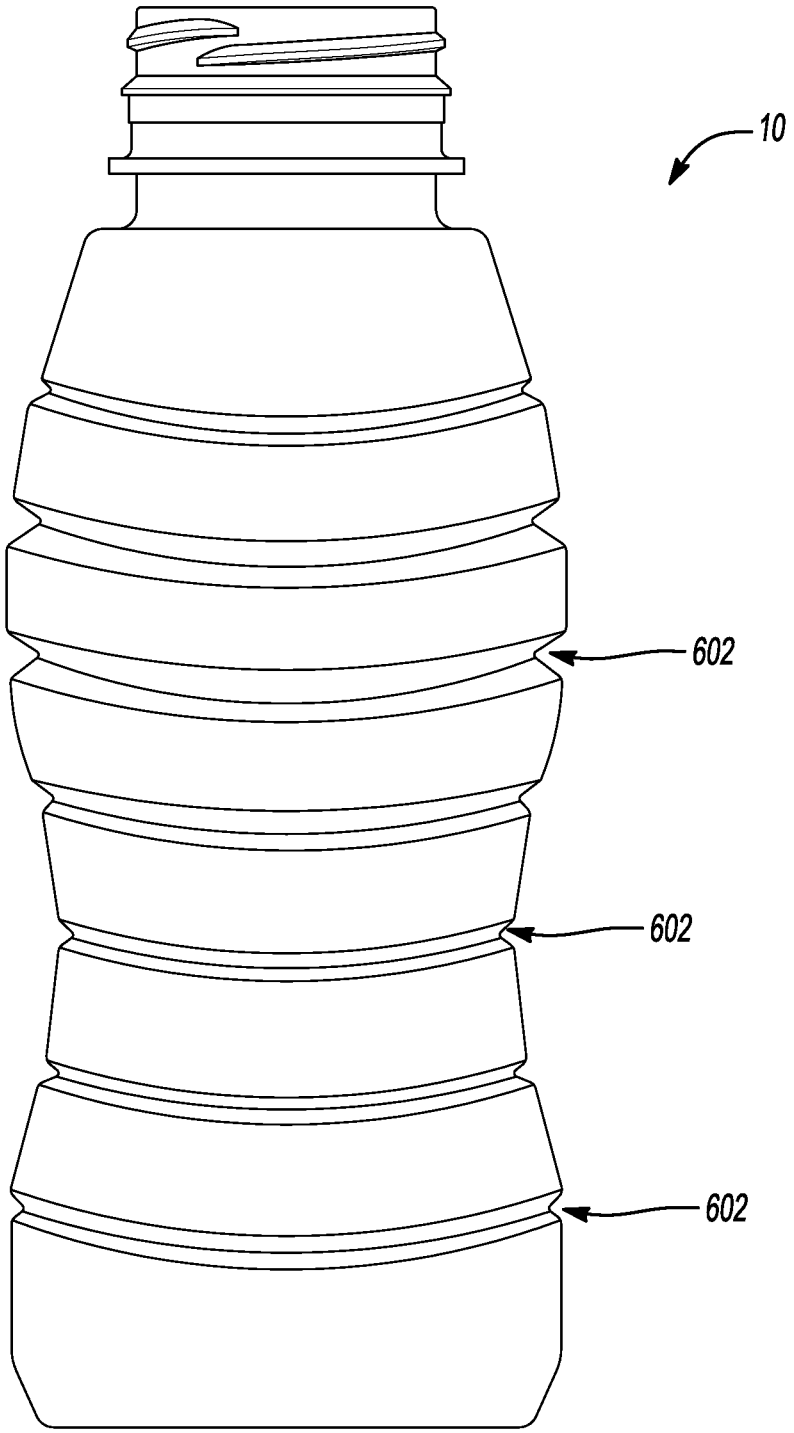

Fig-32

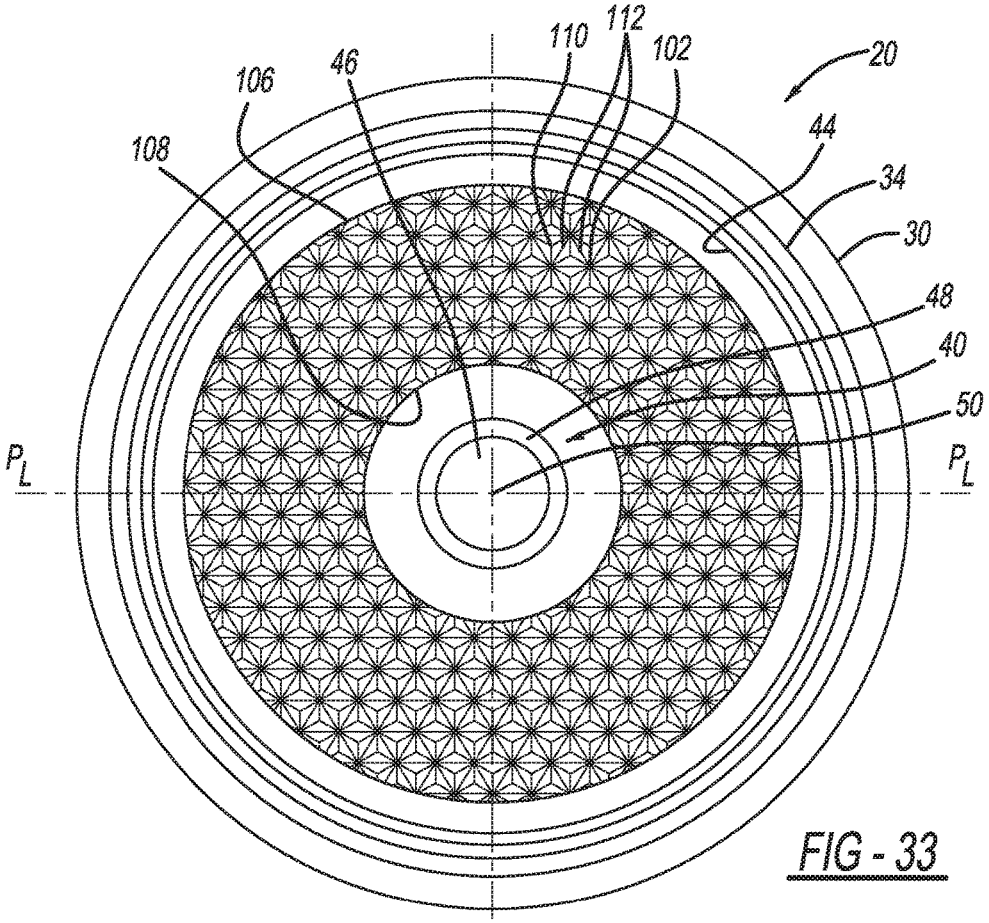
20
112
110
102
46
106
108
44
34
30
48
40
50
P_L
P_L

FIG - 33

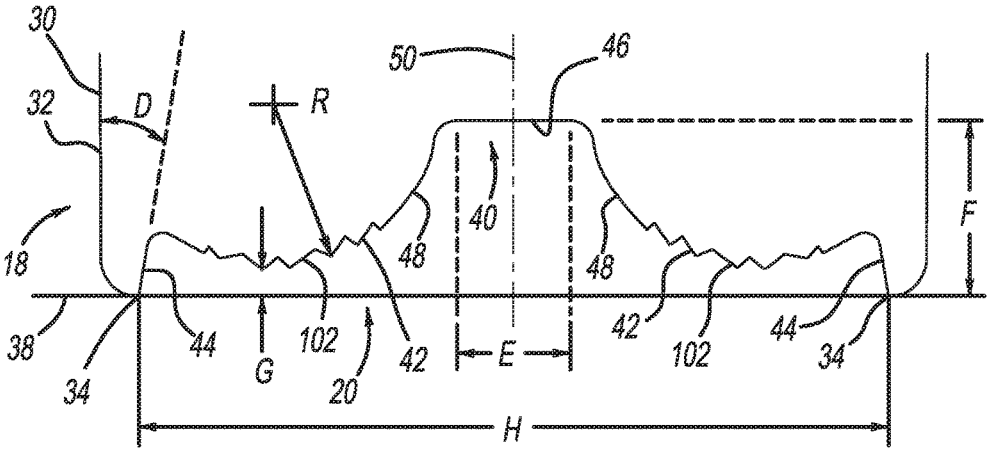
30
32
D
R
50
46
40
48
48
F
18
38
34
44
G
102
20
42
E
42
102
44
34
H

FIG - 34

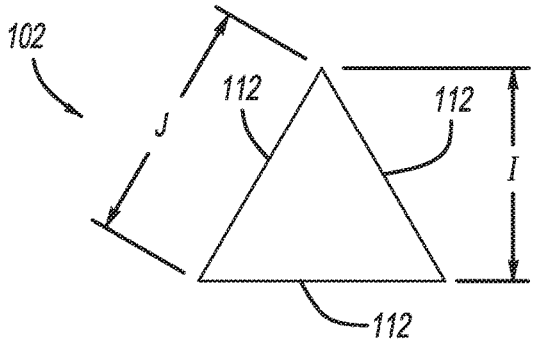

FIG - 35

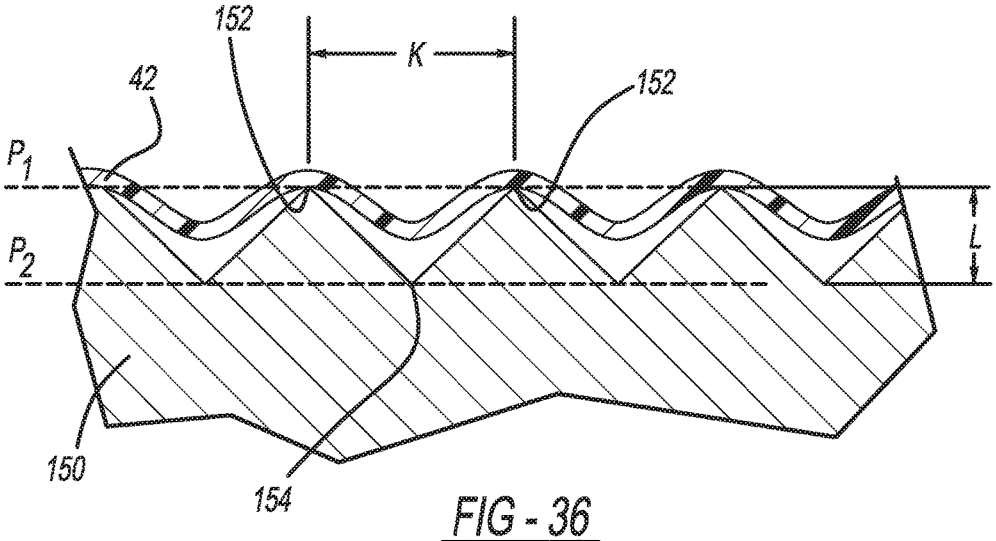

FIG - 36

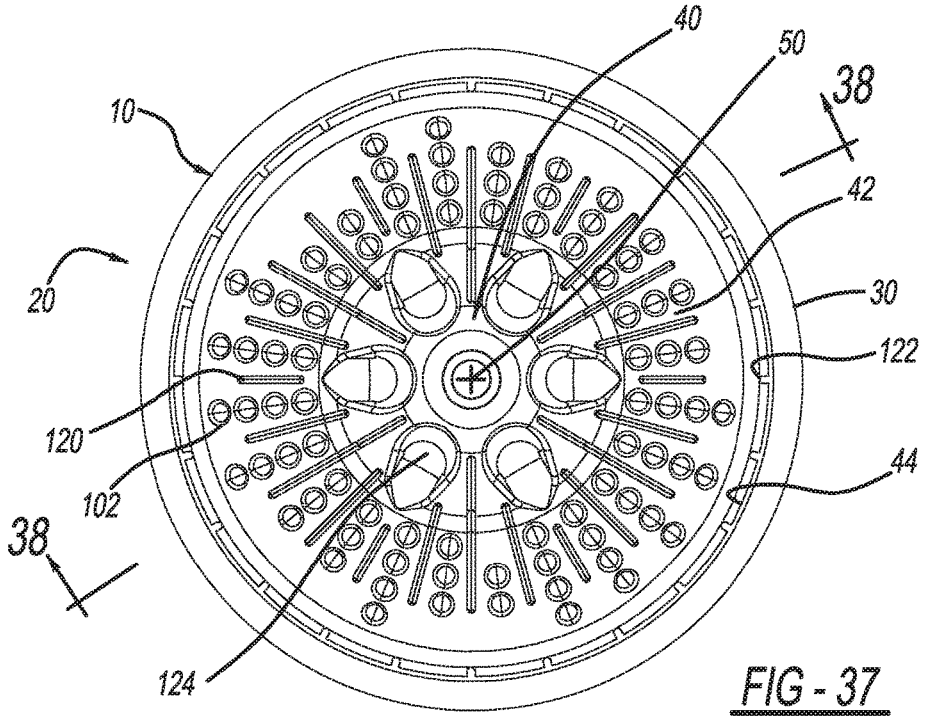
40
50
38
10
42
20
30
122
120
44
102
38
124

FIG - 37

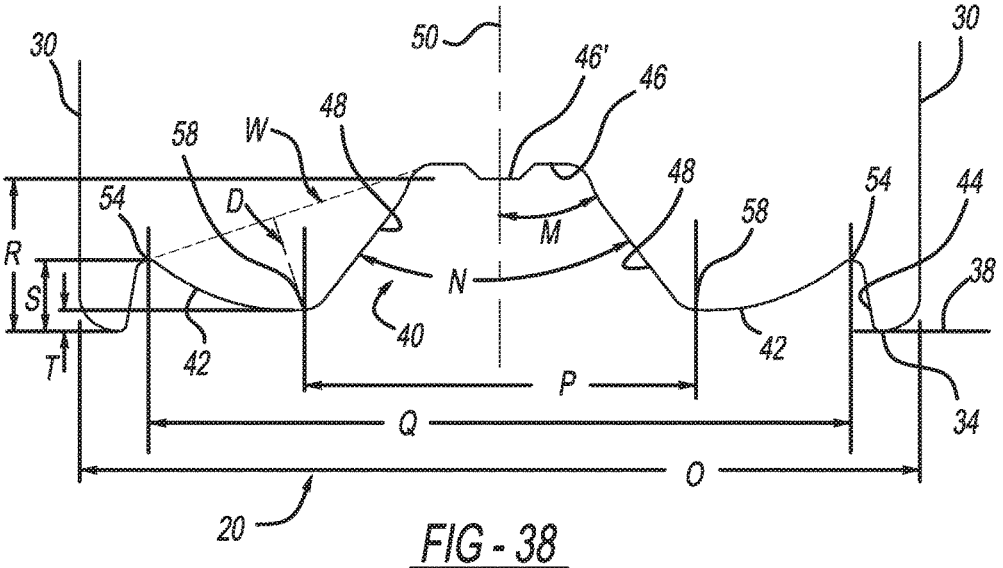
30
50
46'
46
30
58
W
48
48
54
D
M
58
54
44
R
N
38
S
40
42
42
T
P
34
Q
O
20

FIG - 38

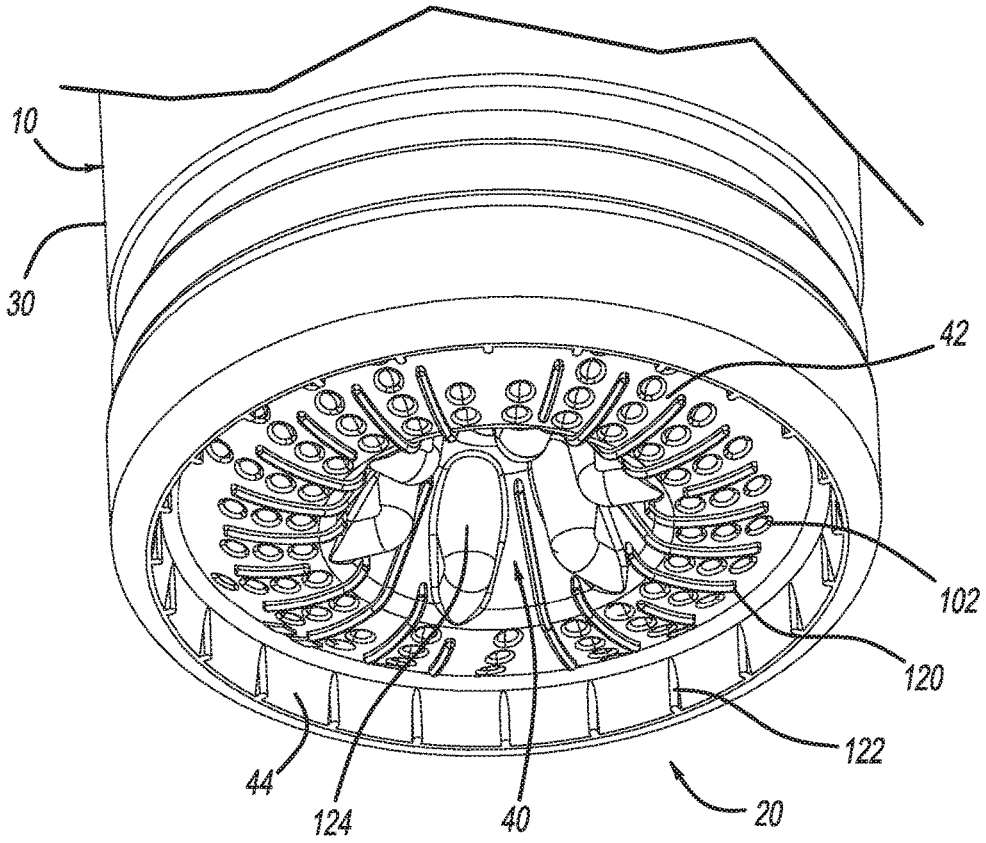

FIG - 39

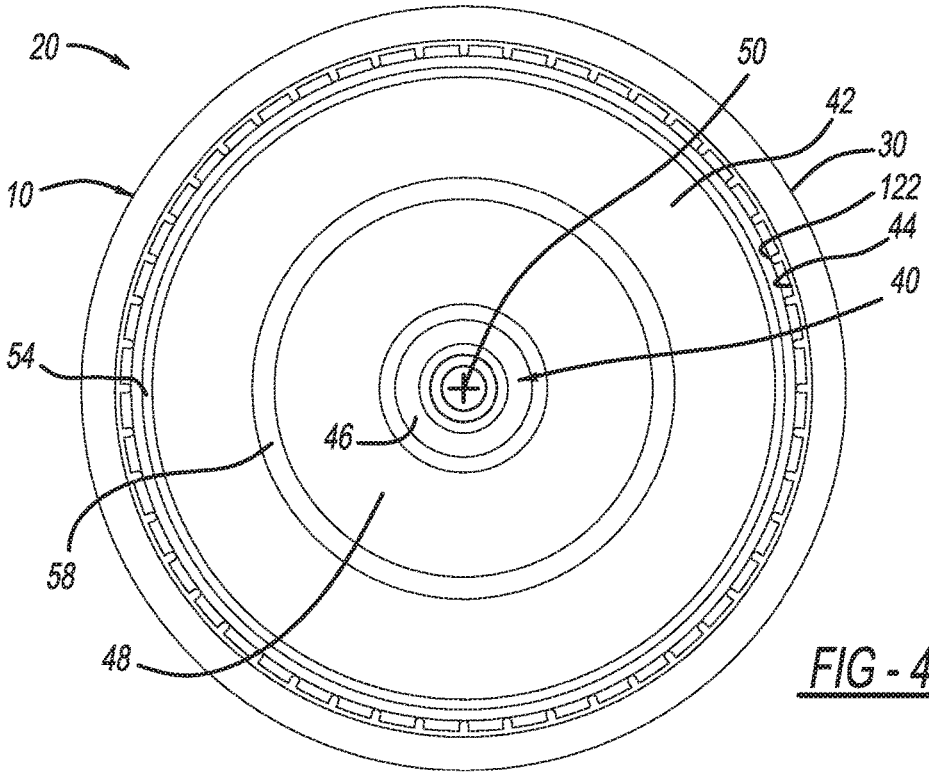

FIG - 40

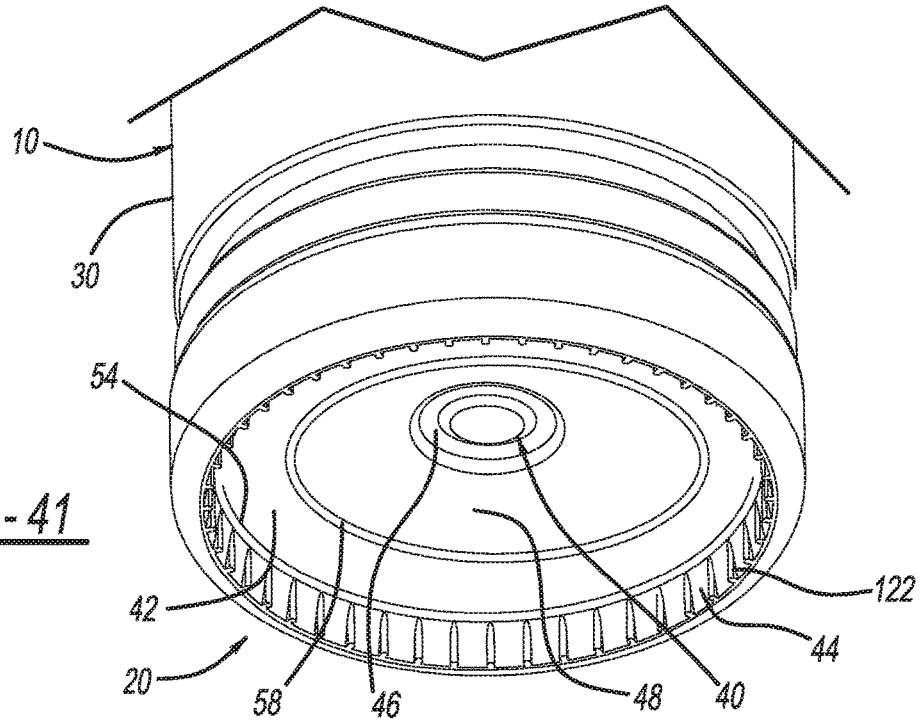

FIG - 41

VACUUM ABSORBING BASES FOR HOT-FILL CONTAINERS

CROSS-REFERENCE TO RELATED APPLICATIONS

This application is a continuation-in-part of U.S. patent application Ser. No. 14/072,377 filed on Nov. 5, 2013 (now U.S. Pat. No. 9,394,072), which is a continuation in part of U.S. patent application Ser. No. 12/847,050 filed on Jul. 30, 2010 (now U.S. Pat. No. 8,616,395), which is a continuation-in-part of U.S. patent application Ser. No. 12/272,400 filed on Nov. 17, 2008 (now U.S. Pat. No. 8,276,774), which is a continuation-in-part of U.S. patent application Ser. No. 11/151,676 filed on Jun. 14, 2005 (now U.S. Pat. No. 7,451,886), which is a continuation-in-part of U.S. patent application Ser. No. 11/116,764 filed on Apr. 28, 2005 (now U.S. Pat. No. 7,150,372), which is a continuation of U.S. patent application Ser. No. 10/445,104 filed on May 23, 2003 (now U.S. Pat. No. 6,942,116). U.S. patent application Ser. No. 12/847,050 claims the benefit of U.S. Provisional Patent Application No. 61/230,144, filed on Jul. 31, 2009 and U.S. Provisional Patent Application No. 61/369,156 filed Jul. 30, 2010. The entire disclosures of the above applications are incorporated herein by reference.

FIELD

The present disclosure relates to vacuum absorbing bases for hot-fill containers.

BACKGROUND AND SUMMARY

This section provides background information related to the present disclosure, which is not necessarily prior art. This section also provides a general summary of the disclosure, and is not a comprehensive disclosure of its full scope or all of its features.

As a result of environmental and other concerns, plastic containers, more specifically polyester and even more specifically polyethylene terephthalate (PET) containers, are now being used more than ever to package numerous commodities previously packaged in glass containers. Manufacturers and fillers, as well as consumers, have recognized that PET containers are lightweight, inexpensive, recyclable and manufacturable in large quantities.

Manufacturers currently supply PET containers for various liquid commodities, such as juice and isotonic beverages. Suppliers often fill these liquid products into the containers while the liquid product is at an elevated temperature, typically between 68° C.-96° C. (155° F.-205° F.) and usually at approximately 85° C. (185° F.). When packaged in this manner, the hot temperature of the liquid commodity sterilizes the container at the time of filling. The bottling industry refers to this process as hot filling, and containers designed to withstand the process as hot-fill or heat-set containers.

The hot filling process is acceptable for commodities having a high acid content, but not generally acceptable for non-high acid content commodities. Nonetheless, manufacturers and fillers of non-high acid content commodities desire to supply their commodities in PET containers as well.

For non-high acid commodities, pasteurization and retort are the preferred sterilization process. Pasteurization and retort both present an enormous challenge for manufactures

of PET containers in that heat-set containers cannot withstand the temperature and time demands required of pasteurization and retort.

Pasteurization and retort are both processes for cooking or sterilizing the contents of a container after filling. Both processes include the heating of the contents of the container to a specified temperature, usually above approximately 70° C. (approximately 155° F.), for a specified length of time (20-60 minutes). Retort differs from pasteurization in that retort uses higher temperatures to sterilize the container and cook its contents. Retort also applies elevated air pressure externally to the container to counteract pressure inside the container. The pressure applied externally to the container is necessary because a hot water bath is often used and the overpressure keeps the water, as well as the liquid in the contents of the container, in liquid form, above their respective boiling point temperatures.

PET is a crystallizable polymer, meaning that it is available in an amorphous form or a semi-crystalline form. The ability of a PET container to maintain its material integrity relates to the percentage of the PET container in crystalline form, also known as the "crystallinity" of the PET container. The following equation defines the percentage of crystallinity as a volume fraction:

$$\%\ \text{Crystallinity} = \frac{\rho - \rho_a}{\rho_c - \rho_a} \times 100$$

where ρ is the density of the PET material; ρ_α is the density of pure amorphous PET material (1.333 g/cc); and ρ_c is the density of pure crystalline material (1.455 g/cc).

Container manufactures use mechanical processing and thermal processing to increase the PET polymer crystallinity of a container. Mechanical processing involves orienting the amorphous material to achieve strain hardening. This processing commonly involves stretching a PET preform along a longitudinal axis and expanding the PET preform along a transverse or radial axis to form a PET container. The combination promotes what manufacturers define as biaxial orientation of the molecular structure in the container. Manufacturers of PET containers currently use mechanical processing to produce PET containers having approximately 20% crystallinity in the container's sidewall.

Thermal processing involves heating the material (either amorphous or semi-crystalline) to promote crystal growth. On amorphous material, thermal processing of PET material results in a spherulitic morphology that interferes with the transmission of light. In other words, the resulting crystalline material is opaque, and thus, generally undesirable. Used after mechanical processing, however, thermal processing results in higher crystallinity and excellent clarity for those portions of the container having biaxial molecular orientation. The thermal processing of an oriented PET container, which is known as heat setting, typically includes blow molding a PET preform against a mold heated to a temperature of approximately 120° C.-130° C. (approximately 248° F.-266° F.), and holding the blown container against the heated mold for approximately three (3) seconds. Manufacturers of PET juice bottles, which must be hot-filled at approximately 85° C. (185° F.), currently use heat setting to produce PET bottles having an overall crystallinity in the range of approximately 25-35%.

After being hot-filled, the heat-set containers are capped and allowed to reside at generally the filling temperature for approximately five (5) minutes at which point the container,

along with the product, is then actively cooled prior to transferring to labeling, packaging, and shipping operations. The cooling reduces the volume of the liquid in the container. This product shrinkage phenomenon results in the creation of a vacuum within the container. Generally, vacuum pressures within the container range from 1-300 mm Hg less than atmospheric pressure (i.e., 759 mm Hg-460 mm Hg). If not controlled or otherwise accommodated, these vacuum pressures result in deformation of the container, which leads to either an aesthetically unacceptable container or one that is unstable.

In many instances, container weight is correlated to the amount of the final vacuum present in the container after this fill, cap and cool down procedure, that is, the container is made relatively heavy to accommodate vacuum related forces. Similarly, reducing container weight, i.e., "light-weighting" the container, while providing a significant cost savings from a material standpoint, requires a reduction in the amount of the final vacuum. Typically, the amount of the final vacuum can be reduced through various processing options such as the use of nitrogen dosing technology, minimize headspace or reduce fill temperature. One drawback with the use of nitrogen dosing technology however is that the maximum line speeds achievable with the current technology is limited to roughly 200 containers per minute. Such slower line speeds are seldom acceptable. Additionally, the dosing consistency is not yet at a technological level to achieve efficient operations. Minimizing headspace requires more precession during filling, again resulting in slower line speeds. Reducing fill temperature is equally disadvantageous as it limits the type of commodity suitable for the container.

Typically, container manufacturers accommodate vacuum pressures by incorporating structures in the container sidewall. Container manufacturers commonly refer to these structures as vacuum panels. Traditionally, these paneled areas have been semi-rigid by design, unable to accommodate the high levels of vacuum pressures currently generated, particularly in lightweight containers.

Development of technology options to achieve an ideal balance of light-weighting and design flexibility are of great interest. According to the principles of the present teachings, an alternative vacuum absorbing capability is provided within both the container body and base. Traditional hot-fill containers accommodate nearly all vacuum forces within the body (or sidewall) of the container through deflection of the vacuum panels. These containers are typically provided with a rigid base structure that substantially prevents deflection thereof and thus tends to be heavier than the rest of the container.

In contrast, POWERFLEX technology, offered by the assignee of the present application, utilizes a lightweight base design to accommodate nearly all vacuum forces. However, in order to accommodate such a large amount of vacuum, the POWERFLEX base must be designed to invert, which requires a dramatic snap-through from an outwardly curved initial shape to an inwardly curved final shape. This typically requires that the sidewall of the container be sufficiently rigid to allow the base to activate under vacuum, thus requiring more weight and/or structure within the container sidewall. Neither the traditional technology nor POWERFLEX system offers the optimal balance of a thin light-weight container body and base that is capable of withstanding the necessary vacuum pressures.

Therefore, an object of the present teachings is to achieve the optimal balance of weight and vacuum performance of both the container body and base. To achieve this, in some embodiments, a hot-fill container is provided that comprises a lightweight, flexible base design that is easily moveable to accommodate vacuum, but does not require a dramatic inversion or snap-through, thus eliminating the need for a heavy sidewall. The flexible base design serves to complement vacuum absorbing capabilities within the container sidewall. Furthermore, an object of the present teachings is to define theoretical light weighting limits and explore alternative vacuum absorbing technologies that create additional structure under vacuum.

The container body and base of the present teachings can each be lightweight structures designed to accommodate vacuum forces either simultaneously or in sequence. In any event, the goal is for both the container body and base to absorb a significant percentage of the vacuum. By utilizing a lightweight base design to absorb a portion of the vacuum forces enables an overall light-weighting, design flexibility, and effective utilization of alternative vacuum absorbing capabilities on the container sidewall. It is therefore an object of the present teachings to provide such a container. It should be understood, however, that in some embodiments some principles of the present teachings, such as the base configurations, can be used separate from other principles, such as the sidewall configurations, or vice versa.

The present teachings provide for a plastic container including an upper portion, a base, a plurality of surface features, and a substantially cylindrical portion. The upper portion has a mouth defining an opening into the container. The base is movable to accommodate vacuum forces generated within the container thereby decreasing the volume of the container. The plurality of surface features are included with the base and are configured to accommodate vacuum forces. The substantially cylindrical portion extends between the upper portion and the base.

The present teachings further provide for a plastic container including an upper portion, a base, a plurality of adjacent equilateral triangular features, and a substantially cylindrical portion. The base is movable to accommodate vacuum forces generated within the container thereby decreasing the volume of the container. The plurality of adjacent triangular features protrude from the base and are configured to accommodate vacuum forces. The substantially cylindrical portion extends between the upper portion and the base.

The present teachings also provide for a plastic container including an upper portion, a base, a plurality of adjacent equilateral triangular features, and a substantially cylindrical portion. The upper portion has a mouth defining an opening into the container. The base is movable to accommodate vacuum forces generated within the container thereby decreasing the volume of the container. The plurality of adjacent equilateral triangular features protrude from about 50% of the base and are configured to accommodate vacuum forces. The triangular features are spaced apart from both a central pushup of the base and a wall of the base. The substantially cylindrical portion extends between the upper portion and the base. The triangular features are formed from a mold including a plurality of peaks and troughs corresponding to the equilateral triangular features. The peaks are aligned along a first plane and the troughs are aligned along a second plane extending parallel to the first plane.

The present teachings further provide for a polymeric container including an upper portion defining an opening to an interior volume of the container. A base is movable to accommodate vacuum forces generated within the container, thereby decreasing the volume of the container. A substan-

tially cylindrical sidewall extends between the upper portion and the base. A rigid, central pushup portion of the base is at an axial center of the base. A central longitudinal axis of the container extends through a center of the central pushup portion. A flexible diaphragm of the base extends outward from the central pushup portion.

Further areas of applicability will become apparent from the description provided herein. The description and specific examples in this summary are intended for purposes of illustration only and are not intended to limit the scope of the present disclosure.

DRAWINGS

The drawings described herein are for illustrative purposes only of selected embodiments and not all possible implementations, and are not intended to limit the scope of the present disclosure.

FIG. **1** is an elevational view of a plastic container according to the present teachings, the container as molded and empty.

FIG. **2** is an elevational view of the plastic container according to the present teachings, the container being filled and sealed.

FIG. **3** is a bottom perspective view of a portion of the plastic container of FIG. **1**.

FIG. **4** is a bottom perspective view of a portion of the plastic container of FIG. **2**.

FIG. **5** is a cross-sectional view of the plastic container, taken generally along line **5-5** of FIG. **3**.

FIG. **6** is a cross-sectional view of the plastic container, taken generally along line **6-6** of FIG. **4**.

FIG. **7** is a cross-sectional view of the plastic container, similar to FIG. **5**, according to some embodiments of the present teachings.

FIG. **8** is a cross-sectional view of the plastic container, similar to FIG. **6**, according to some embodiments of the present teachings.

FIG. **9** is a bottom view of an additional embodiment of the plastic container, the container as molded and empty.

FIG. **10** is a cross-sectional view of the plastic container, taken generally along line **10-10** of FIG. **9**.

FIG. **11** is a bottom view of the embodiment of the plastic container shown in FIG. **9**, the plastic container being filled and sealed.

FIG. **12** is a cross-sectional view of the plastic container, taken generally along line **12-12** of FIG. **11**.

FIG. **13** is a cross-sectional view of the plastic container, similar to FIGS. **5** and **7**, according to some embodiments of the present teachings.

FIG. **14** is a cross-sectional view of the plastic container, similar to FIGS. **6** and **8**, according to some embodiments of the present teachings.

FIG. **15** is a bottom view of the plastic container according to some embodiments of the present teachings.

FIG. **16** is a cross-sectional view of the plastic container, similar to FIGS. **5** and **7**, according to some embodiments of the present teachings.

FIG. **17** is a cross-sectional view of the plastic container, similar to FIGS. **6** and **8**, according to some embodiments of the present teachings.

FIG. **18** is a bottom view of the plastic container according to some embodiments of the present teachings.

FIG. **19** is a bottom view of the plastic container according to some embodiments of the present teachings.

FIG. **20** is a cross-sectional view of the plastic container of FIG. **19**.

FIG. **21** is a bottom view of the plastic container according to some embodiments of the present teachings.

FIG. **22** is a cross-sectional view of the plastic container of FIG. **21**.

FIG. **23** is an enlarged bottom view of the plastic container of FIG. **21**.

FIG. **24** is a bottom view of the plastic container according to some embodiments of the present teachings.

FIG. **25** is a cross-sectional view of the plastic container of FIG. **24**.

FIG. **26** is a bottom view of the plastic container according to some embodiments of the present teachings.

FIG. **27** is a cross-sectional view of the plastic container of FIG. **26**.

FIG. **28** is a graph illustrating the vacuum response versus displacement for the plastic container of FIG. **19**.

FIG. **29** is a graph illustrating the vacuum response versus displacement for the plastic container of FIG. **1**.

FIG. **30** is a graph illustrating the vacuum response versus displacement for the plastic container of FIG. **8**.

FIG. **31** is a cross-sectional view of a plastic container according to some embodiments of the present teachings.

FIG. **32** is a cross-sectional view of a plastic container according to some embodiments of the present teachings.

FIG. **33** is a bottom view of the plastic container according to some embodiments of the present teachings.

FIG. **34** is a cross-sectional view of the plastic container of FIG. **33** taken along line P_L-P_L of FIG. **33**.

FIG. **35** illustrates an exemplary triangular feature of an inversion ring of the plastic container of FIG. **33**.

FIG. **36** is a cross-sectional view of a mold for forming the plastic container of FIG. **33**.

FIG. **37** is an exterior plan view of another base according to the present teachings for a plastic container, such as the plastic container illustrated in FIG. **1**.

FIG. **38** is a cross-sectional view of the base of FIG. **37** in an as-blown position, the cross-sectional view taken along line **38-38** of FIG. **37**.

FIG. **39** is a perspective view of the base of FIG. **37**.

FIG. **40** is an exterior plan view of another base according to the present teachings for a plastic container, such as the plastic container of FIG. **1**.

FIG. **41** is a perspective view of the base of FIG. **40**.

Corresponding reference numerals indicate corresponding parts throughout the several views of the drawings.

DETAILED DESCRIPTION

Example embodiments will now be described more fully with reference to the accompanying drawings. Example embodiments are provided so that this disclosure will be thorough, and will fully convey the scope to those who are skilled in the art. Numerous specific details are set forth such as examples of specific components, devices, and methods, to provide a thorough understanding of embodiments of the present disclosure. It will be apparent to those skilled in the art that specific details need not be employed, that example embodiments may be embodied in many different forms and that neither should be construed to limit the scope of the disclosure.

The terminology used herein is for the purpose of describing particular example embodiments only and is not intended to be limiting. As used herein, the singular forms "a", "an" and "the" may be intended to include the plural forms as well, unless the context clearly indicates otherwise. The terms "comprises," "comprising," "including," and "having," are inclusive and therefore specify the presence of

stated features, integers, steps, operations, elements, and/or components, but do not preclude the presence or addition of one or more other features, integers, steps, operations, elements, components, and/or groups thereof. The method steps, processes, and operations described herein are not to be construed as necessarily requiring their performance in the particular order discussed or illustrated, unless specifically identified as an order of performance. It is also to be understood that additional or alternative steps may be employed.

As discussed above, to accommodate vacuum forces during cooling of the contents within a heat-set container, containers generally have a series of vacuum panels or ribs around their sidewall. Traditionally, these vacuum panels have been semi-rigid and incapable of preventing unwanted distortion elsewhere in the container, particularly in lightweight containers. However, in some vacuum panel-less containers, a combination of controlled deformation (i.e., in the base or closure) and vacuum resistance in the remainder of the container is required. As discussed herein, each of the above examples (i.e. traditional vacuum absorbing container having a lightweight and flexible sidewall with a heavy and rigid base, and POWERFLEX container having a lightweight and flexible base with a heavy and rigid sidewall) may not fully optimize a hot-fill container design. Moreover, the simple combination of the sidewall of the traditional vacuum absorbing container and the base of the POWERFLEX container would typically lead to a container having a sidewall that is not sufficiently rigid to withstand the snap-through from an outwardly curved initial shape to an inwardly curved final shape.

Accordingly, the present teachings provide a plastic container which enables its base portion under typical hot-fill process conditions to deform and move easily while maintaining a rigid structure (i.e., against internal vacuum) in the remainder of the container. As an example, in a 16 fl. oz. plastic container, the container typically should accommodate roughly 18-24 cc of volume displacement. In the present plastic container, the base portion accommodates a majority of this requirement. The remaining portions of the plastic container are easily able to accommodate the rest of this volume displacement without readily noticeable distortion. More particularly, traditional containers utilize a combination of bottle geometry and wall thickness to create a structure that can resist a portion of the vacuum, and movable sidewall panels, collapsible ribs, or moveable bases to absorb the remaining vacuum. This results in two elements of internal vacuum—residual and absorbed. The sum of the residual vacuum and the absorbed vacuum equals the total amount of vacuum that results from the combination of the liquid commodity and the headspace contracting during cooling in a rigid container.

Although alternative designs are available in the art, including those requiring the use of external activation devices on the filling line (as in the Graham ATP technology), the present teachings are able to achieve lighter hot fillable containers, without requiring an external activation device, by absorbing a higher percentage of the internal vacuum and/or volume in a controlled way while simultaneously providing sufficient structural integrity to maintain the desired bottle shape.

In some embodiments, the container according to the present teachings combines sidewall vacuum and/or volume compensation panels or collapsible ribs with a flexible base design resulting in a hybrid of previous technologies that results in a lighter weight container than could be achieved with either method individually.

The vacuum and/or volume compensation characteristics could be defined as:

X=the percentage of the total vacuum and/or volume that is absorbed by the sidewall panels, ribs and/or other vacuum and/or volume compensation features;

Y=the percentage of the total vacuum and/or volume that is absorbed by the base movement; and

Z=the residual vacuum and/or volume remaining in the container after the compensation achieved by the vacuum and/or volume compensation features in the sidewall and/or base.

In the case of the traditional vacuum compensation features (i.e. sidewall only or base only), the vacuum and/or volume compensation could be expressed as:

Z=10 to 90% of the total vacuum and/or volume; and

X OR Y=10 to 90% of the total vacuum and/or volume.

It should be appreciated from the foregoing that a conventional container could merely achieve a total of 90% of the total vacuum and/or volume.

However, according to the present teachings, a hot-fillable container is provided where the vacuum and/or volume compensation could be described as:

Z=0 to 25% of the total vacuum and/or volume;

X=10 to 90% of the total vacuum and/or volume; and

Y=10 to 90% of the total vacuum and/or volume.

As can be seen, according to these principles, the present teachings are operable to achieve vacuum absorption in both the base and the sidewall, thereby permitting, if desired, absorption of the entire internal vacuum. It should be appreciated that in some embodiments a slight remaining vacuum may be desired.

To accomplish the lightest possible container weight with respect to vacuum, the residual vacuum (Z) should be as close as possible to 0% of the total vacuum and the combined movements of the vacuum absorbing features would be designed to absorb basically 100% of the volume contraction that occurs inside of the container as the contents cool from the filling temperature to the point of maximum density under the required service conditions. At this point external forces such as top load or side load would result in a pressurization of the container that would help it to resist those external forces. This would result in a container weight that is dictated by the requirements of the handling and distribution system, not by the filling conditions.

In some embodiments, the present teachings provide a significantly round plastic container that does not ovalize below 5% total vacuum absorption that consists of a movable base and a movable sidewall at an average wall thickness less than 0.020". However, in some embodiments, the present teachings can provide a plastic container that comprises a base that absorbs between 10 and 90% of the total vacuum in conjunction with a sidewall that absorbs between 90 and 10% of the total vacuum absorbed. In some embodiments, the base and the sidewall can activate simultaneously. However, in some embodiments, the base and the sidewall can activate sequentially.

Still further, according to the present teachings, a significantly round plastic container is provided that provides a movable base and a movable sidewall that both activate simultaneously or sequentially at a vacuum level less than that of 5% of the total vacuum absorption of the container.

In a vacuum panel-less container, a combination of controlled deformation (i.e., in the base or closure) and vacuum resistance in the remainder of the container is required. Accordingly, the present teaching provides for a plastic container which enables its base portion under typical hot-fill process conditions to deform and move easily while

maintaining a rigid structure (i.e., against internal vacuum) in the remainder of the container.

As shown in FIGS. **1** and **2**, a plastic container **10** of the invention includes a finish **12**, a neck or an elongated neck **14**, a shoulder region **16**, a body portion **18**, and a base **20**. Those skilled in the art know and understand that the neck **14** can have an extremely short height, that is, becoming a short extension from the finish **12**, or an elongated neck as illustrated in the figures, extending between the finish **12** and the shoulder region **16**. The plastic container **10** has been designed to retain a commodity during a thermal process, typically a hot-fill process. For hot-fill bottling applications, bottlers generally fill the container **10** with a liquid or product at an elevated temperature between approximately 155° F. to 205° F. (approximately 68° C. to 96° C.) and seal the container **10** with a closure **28** before cooling. As the sealed container **10** cools, a slight vacuum, or negative pressure, forms inside causing the container **10**, in particular, the base **20** to change shape. In addition, the plastic container **10** may be suitable for other high-temperature pasteurization or retort filling processes, or other thermal processes as well.

The plastic container **10** of the present teaching is a blow molded, biaxially oriented container with a unitary construction from a single or multi-layer material. A well-known stretch-molding, heat-setting process for making the hot-fillable plastic container **10** generally involves the manufacture of a preform (not illustrated) of a polyester material, such as polyethylene terephthalate (PET), having a shape well known to those skilled in the art similar to a test-tube with a generally cylindrical cross section and a length typically approximately fifty percent (50%) that of the container height. A machine (not illustrated) places the preform heated to a temperature between approximately 190° F. to 250° F. (approximately 88° C. to 121° C.) into a mold cavity (not illustrated) having a shape similar to the plastic container **10**. The mold cavity is heated to a temperature between approximately 250° F. to 350° F. (approximately 121° C. to 177° C.). A stretch rod apparatus (not illustrated) stretches or extends the heated preform within the mold cavity to a length approximately that of the container thereby molecularly orienting the polyester material in an axial direction generally corresponding with a central longitudinal axis **50**. While the stretch rod extends the preform, air having a pressure between 300 PSI to 600 PSI (2.07 MPa to 4.14 MPa) assists in extending the preform in the axial direction and in expanding the preform in a circumferential or hoop direction thereby substantially conforming the polyester material to the shape of the mold cavity and further molecularly orienting the polyester material in a direction generally perpendicular to the axial direction, thus establishing the biaxial molecular orientation of the polyester material in most of the container. Typically, material within the finish **12** and a sub-portion of the base **20** are not substantially molecularly oriented. The pressurized air holds the mostly biaxial molecularly oriented polyester material against the mold cavity for a period of approximately two (2) to five (5) seconds before removal of the container from the mold cavity. To achieve appropriate material distribution within the base **20**, the inventors employ an additional stretch-molding step substantially as taught by U.S. Pat. No. 6,277,321 which is incorporated herein by reference.

Alternatively, other manufacturing methods using other conventional materials including, for example, high density polyethylene, polypropylene, polyethylene naphthalate (PEN), a PET/PEN blend or copolymer, and various multi-layer structures may be suitable for the manufacture of plastic container **10**. Those having ordinary skill in the art will readily know and understand plastic container **10** manufacturing method alternatives.

The finish **12** of the plastic container **10** includes a portion defining an aperture or mouth **22**, a threaded region **24**, and a support ring **26**. The aperture **22** allows the plastic container **10** to receive a commodity while the threaded region **24** provides a means for attachment of the similarly threaded closure or cap **28** (shown in FIG. **2**). Alternatives may include other suitable devices that engage the finish **12** of the plastic container **10**. Accordingly, the closure or cap **28** engages the finish **12** to preferably provide a hermetical seal of the plastic container **10**. The closure or cap **28** is preferably of a plastic or metal material conventional to the closure industry and suitable for subsequent thermal processing, including high temperature pasteurization and retort. The support ring **26** may be used to carry or orient the preform (the precursor to the plastic container **10**) (not shown) through and at various stages of manufacture. For example, the preform may be carried by the support ring **26**, the support ring **26** may be used to aid in positioning the preform in the mold, or an end consumer may use the support ring **26** to carry the plastic container **10** once manufactured.

The elongated neck **14** of the plastic container **10** in part enables the plastic container **10** to accommodate volume requirements. Integrally formed with the elongated neck **14** and extending downward therefrom is the shoulder region **16**. The shoulder region **16** merges into and provides a transition between the elongated neck **14** and the body portion **18**. The body portion **18** extends downward from the shoulder region **16** to the base **20** and includes sidewalls **30**. The specific construction of the base **20** of the container **10** allows the sidewalls **30** for the heat-set container **10** to not necessarily require additional vacuum panels or pinch grips and therefore, can be generally smooth and glass-like. However, a significantly lightweight container will likely include sidewalls having vacuum panels, ribbing, and/or pinch grips along with the base **20**.

The base **20** of the plastic container **10**, which extends inward from the body portion **18**, can comprise a chime **32**, a contact ring **34** and a central portion **36**. In some embodiments, the contact ring **34** is itself that portion of the base **20** that contacts a support surface **38** that in turn supports the container **10**. As such, the contact ring **34** may be a flat surface or a line of contact generally circumscribing, continuously or intermittently, the base **20**. The base **20** functions to close off the bottom portion of the plastic container **10** and, together with the elongated neck **14**, the shoulder region **16**, and the body portion **18**, to retain the commodity.

In some embodiments, the plastic container **10** is preferably heat-set according to the above-mentioned process or other conventional heat-set processes. In some embodiments, to accommodate vacuum forces while allowing for the omission of vacuum panels and pinch grips in the body portion **18** of the container **10**, the base **20** of the present teaching adopts a novel and innovative construction. Generally, the central portion **36** of the base **20** can comprise a central pushup **40** and an inversion ring **42**. The inversion ring **42** can include an upper portion **54** and a lower portion **58**. Additionally, the base **20** can include an upstanding circumferential wall or edge **44** that forms a transition between the inversion ring **42** and the contact ring **34**.

As shown in the figures, the central pushup **40**, when viewed in cross section, is generally in the shape of a truncated cone having a top surface **46** that is generally

parallel to the support surface **38**. Side surfaces **48**, which are generally planar in cross section, slope upward toward the central longitudinal axis **50** of the container **10**. The exact shape of the central pushup **40** can vary greatly depending on various design criteria. However, in general, the overall diameter of the central pushup **40** (that is, the truncated cone) is at most 30% of generally the overall diameter of the base **20**. The central pushup **40** is generally where the preform gate is captured in the mold. Located within the top surface **46** is the sub-portion of the base **20** which includes polymer material that is not substantially molecularly oriented.

In some embodiments as shown in FIGS. **3**, **5**, **7**, **10**, **13** and **16**, when initially formed, the inversion ring **42**, having a gradual radius, completely surrounds and circumscribes the central pushup **40**. As formed, the inversion ring **42** can protrude outwardly, below a plane where the base **20** would lie if it was flat. The transition between the central pushup **40** and the adjacent inversion ring **42** can be rapid in order to promote as much orientation as near the central pushup **40** as possible. This serves primarily to ensure a minimal wall thickness **66** for the inversion ring **42**, in particular at the lower portion **58** of the base **20**. In some embodiments, the wall thickness **66** of the lower portion **58** of the inversion ring **42** is between approximately 0.008 inch (0.20 mm) to approximately 0.025 inch (0.64 mm), and preferably between approximately 0.010 inch to approximately 0.014 inch (0.25 mm to 0.36 mm) for a container having, for example, an approximately 2.64-inch (67.06 mm) diameter base. Wall thickness **70** of top surface **46**, depending on precisely where one takes a measurement, can be 0.060 inch (1.52 mm) or more; however, wall thickness **70** of the top surface **46** quickly transitions to wall thickness **66** of the lower portion **58** of the inversion ring **42**. The wall thickness **66** of the inversion ring **42** must be relatively consistent and thin enough to allow the inversion ring **42** to be flexible and function properly. At a point along its circumventional shape, the inversion ring **42** may alternatively feature a small indentation, not illustrated but well known in the art, suitable for receiving a pawl that facilitates container rotation about the central longitudinal axis **50** during a labeling operation.

The circumferential wall or edge **44**, defining the transition between the contact ring **34** and the inversion ring **42** can be, in cross section, an upstanding substantially straight wall approximately 0.030 inch (0.76 mm) to approximately 0.325 inch (8.26 mm) in length. Preferably, for a 2.64-inch (67.06 mm) diameter base container, the circumferential wall **44** can measure between approximately 0.140 inch to approximately 0.145 inch (3.56 mm to 3.68 mm) in length. For a 5-inch (127 mm) diameter base container, the circumferential wall **44** could be as large as 0.325 inch (8.26 mm) in length. The circumferential wall or edge **44** can be generally at an angle **64** relative to the central longitudinal axis **50** of between approximately zero degree and approximately 20 degrees, and preferably approximately 15 degrees. Accordingly, the circumferential wall or edge **44** need not be exactly parallel to the central longitudinal axis **50**. The circumferential wall or edge **44** is a distinctly identifiable structure between the contact ring **34** and the inversion ring **42**. The circumferential wall or edge **44** provides strength to the transition between the contact ring **34** and the inversion ring **42**. In some embodiments, this transition must be abrupt in order to maximize the local strength as well as to form a geometrically rigid structure. The resulting localized strength increases the resistance to creasing in the base **20**. The contact ring **34**, for a 2.64-inch (67.06 mm) diameter base container, can have a wall thickness **68** of approximately 0.010 inch to approximately 0.016 inch (0.25 mm to 0.41 mm). In some embodiments, the wall thickness **68** is at least equal to, and more preferably is approximately ten percent, or more, than that of the wall thickness **66** of the lower portion **58** of the inversion ring **42**.

When initially formed, the central pushup **40** and the inversion ring **42** remain as described above and shown in FIGS. **1**, **3**, **5**, **7**, **10**, **13** and **16**. Accordingly, as molded, a dimension **52** measured between the upper portion **54** of the inversion ring **42** and the support surface **38** is greater than or equal to a dimension **56** measured between the lower portion **58** of the inversion ring **42** and the support surface **38**. Upon filling, the central portion **36** of the base **20** and the inversion ring **42** will slightly sag or deflect downward toward the support surface **38** under the temperature and weight of the product. As a result, the dimension **56** becomes almost zero, that is, the lower portion **58** of the inversion ring **42** is practically in contact with the support surface **38**. Upon filling, capping, sealing, and cooling of the container **10**, as shown in FIGS. **2**, **4**, **6**, **8**, **12**, **14** and **17**, vacuum related forces cause the central pushup **40** and the inversion ring **42** to rise or push upward thereby displacing volume. In this position, the central pushup **40** generally retains its truncated cone shape in cross section with the top surface **46** of the central pushup **40** remaining substantially parallel to the support surface **38**. The inversion ring **42** is incorporated into the central portion **36** of the base **20** and virtually disappears, becoming more conical in shape (see FIGS. **8**, **14** and **17**). Accordingly, upon capping, sealing, and cooling of the container **10**, the central portion **36** of the base **20** exhibits a substantially conical shape having surfaces **60** in cross section that are generally planar and slope upward toward the central longitudinal axis **50** of the container **10**, as shown in FIGS. **6**, **8**, **14** and **17**. This conical shape and the generally planar surfaces **60** are defined in part by an angle **62** of approximately 7° to approximately 23°, and more typically between approximately 10° and approximately 17°, relative to a horizontal plane or the support surface **38**. As the value of dimension **52** increases and the value of dimension **56** decreases, the potential displacement of volume within container **10** increases. Moreover, while planar surfaces **60** are substantially straight (particularly as illustrated in FIGS. **8** and **14**), those skilled in the art will realize that planar surfaces **60** will often have a somewhat rippled appearance. A typical 2.64-inch (67.06 mm) diameter base container, container **10** with base **20**, has an as molded base clearance dimension **72**, measured from the top surface **46** to the support surface **38**, with a value of approximately 0.500 inch (12.70 mm) to approximately 0.600 inch (15.24 mm) (see FIGS. **7**, **13** and **16**). When responding to vacuum related forces, base **20** has an as filled base clearance dimension **74**, measured from the top surface **46** to the support surface **38**, with a value of approximately 0.650 inch (16.51 mm) to approximately 0.900 inch (22.86 mm) (see FIGS. **8**, **14** and **17**). For smaller or larger containers, the value of the as molded base clearance dimension **72** and the value of the as filled base clearance dimension **74** may be proportionally different.

As set forth above, the difference in wall thickness between the base **20** and the body portion **18** of the container **10** is also of importance. The wall thickness of the body portion **18** must be large enough to allow the inversion ring **42** to flex properly. Depending on the geometry of the base **20** and the amount of force required to allow the inversion ring **42** to flex properly, that is, the ease of movement, the wall thickness of the body portion **18** must be at least 15%, on average, greater than the wall thickness of the base **20**.

Preferably, the wall thickness of the body portion **18** is between two (2) to three (3) times greater than the wall thickness **66** of the lower portion **58** of inversion ring **42**. A greater difference is required if the container must withstand higher forces either from the force required to initially cause the inversion ring **42** to flex or to accommodate additional applied forces once the base **20** movement has been completed.

In some embodiments, the above-described alternative hinges or hinge points may take the form of a series of indents, dimples, or other features that are operable to improve the response profile of the base **20** of the container **10**. Specifically, as illustrated in FIGS. **28-30**, in some embodiments the vacuum response profile of base **20** may define abrupt flexural responses that produce a segmented, non-continuous vacuum curve (see FIG. **29**) defining a pair of vertical sections **302**, **304**, indicative of abruptly reduced internal vacuum pressure. Although this response may be suitable for some embodiments, in other embodiments a more gradual and smooth vacuum curve may be desired (see FIGS. **28** and **30** which will be discussed herein). In this way, a gradual and smooth vacuum curve profile may provide opportunity to redesign the sidewall profile and/or vacuum panels to reduces the need for vacuum panels and/or reduce material wall thickness along the sidewall. Such arrangement can provide reduced container weight and improved design possibilities.

That is, as illustrated in FIGS. **16-27** and **33-36**, the inversion ring **42** may include a series of indents, dimples, or other features **102** formed therein and throughout. As shown (see FIGS. **16-20**), in some embodiments, the series of features **102** are generally circular in shape. However, it should be appreciated that features **102** can define any one of a number of shapes, configurations, arrangements, distributions, and profiles

With particular reference to FIGS. **16-27** and **33-36**, in some embodiments, the features **102** are generally spaced equidistantly apart from one another and arranged in a series of rows and columns that completely cover the inversion ring **42**. Similarly, the series of features **102** can generally and completely surround and circumscribe the central pushup **40** (see FIG. **18**). It is equally contemplated that the series of rows and columns of features **102** may be continuous or intermittent. The features **102**, when viewed in cross section, can be in the shape of a truncated or rounded cone having a lower most surface or point and side surfaces **104**. Side surfaces **104** are generally planar and slope inward toward the central longitudinal axis **50** of the container **10**. The exact shape of the features **102** can vary greatly depending on various design criteria. While the above-described geometry of the features **102** is preferred, it will be readily understood by a person of ordinary skill in the art that other geometrical arrangements are similarly contemplated.

With particular reference to FIGS. **19** and **20**, the features **102** are illustrated as a similarly shaped series of dimples spaced equidistantly apart from one another as a plurality of radial row or columns extending from the central pushup **40** on inversion ring **42**. Although illustrated as being inwardly directed within container **10**, it should be appreciated that features **102** can be outwardly directed in some embodiments. It should also be understood that the particular size, shape, and distribution of dimples can vary depending upon the vacuum curve performance desired and provides control over base flexibility and movement under vacuum providing smooth actuation. As particularly illustrated in FIG. **28**, it can be seen that under vacuum pressure load, base **20** and container **10**, employing the base of FIGS. **19** and **20**, produce a generally smooth and consistent vacuum curve defining a generally constant slope.

With particular reference to FIGS. **21-23**, the features **102** are illustrated as a similarly shaped series of triangularly intersecting dimples spaced equidistantly apart from one another as a plurality of row or columns extending from the central pushup **40** on ring **42**. Features **102** of the present embodiment are inwardly directed and define common boundaries with adjacent features **102** along edges of the inverted triangle. It should also be understood that the particular size, shape, and distribution of dimples can vary depending upon the vacuum curve performance desired and provides control over base flexibility and movement under vacuum providing smooth actuation.

With particular reference to FIGS. **24** and **25**, the features **102** are illustrated as a spider web of radially extending creases **400** spaced equidistantly apart from one another extending from the central pushup **40** on ring **42**. Creases **400** can be joined by a series of interconnecting creases **402**, such as arcuate creases, extending between adjacent creases **400** forming a series of concentrically spaced circumferential rings extending about pushup **40**. It should also be understood that the particular size, shape, and distribution of creases **400** and interconnecting creases **402** can vary depending upon the vacuum curve performance desired and provides control over base flexibility and movement under vacuum providing smooth actuation.

With particular reference to FIGS. **26** and **27**, the features **102** are illustrated as a similarly shaped series of circumferentially-extending creases **500** being spaced equidistantly apart from one another extending from the central pushup **40** on inversion ring **42**. Circumferential creases **500** can be joined by a series of radially-extending, interconnecting creases **502** extending between adjacent circumferential creases **500**. Circumferential creases **500** and radially-extending, interconnecting creases **502** together form a rotated brick design. It should be noted that radially-extending, interconnecting creases **502** can extending continuously from pushup **40** each as a single continuous crease or can be staggered to form the brick design. It should also be understood that the particular size, shape, and distribution of creases **500** and **502** can vary depending upon the vacuum curve performance desired and provides control over base flexibility and movement under vacuum providing smooth actuation.

With reference to FIGS. **33-36**, the features **102** can be a series of triangular features, which may be equilateral in which all sides **112** thereof have the same length J, isosceles in which only two sides **112** have the same length J, or scalene in which none of the sides **112** have the same length J. The triangular features **102** can be arranged in any suitable manner, such as in a plurality of rows and/or columns. Neighboring triangular features **102** can be adjacent to one another, such that they share sidewalls or boundaries as illustrated. The triangular features **102** can be configured such that centers **110** thereof protrude outward from the base **20**, as generally illustrated. The triangular features **102** are offset from both the wall **44** and the central pushup **40** of the base **20**. Any suitable offset can be provided. For example and as illustrated in FIG. **33**, an outermost edge **106** of the triangular features **102** can have a diameter of 67.78 mm or about 67.78 mm, and an innermost edge **108** of the triangular features **102** can occupy a diameter of 23.55 mm or about 23.55 mm as measured through the central longitudinal axis **50**. The base **20** can have an outermost diameter of 87.5 mm or about 87.5 mm, as measured through the central longitudinal axis **50**. The triangular features **102** can occupy any

suitable portion of the surface area of the base **20**, such as from about 30% to about 70%, about 50%, or 50% of the surface area of the base **20**. For example, the triangular features **102** can occupy or cover a surface area of the base **20** of 3,172 mm^2, or about 3,172 mm^2, out of a total surface area of 6,013 mm^2 or about 6,013 mm^2 of the base **20**. The triangular features **102** can be present on any suitable portion of the base **20**, such as at any suitable portion of the inversion ring **42** between the wall **44** and the side surfaces **48** of the central push up **40**, for example.

With reference to FIG. **34** for example, which illustrates the base **20** prior to the plastic container **10** being hot-filled, the inversion ring **42** including the triangular features **102** present thereon between the wall **44** and the side surfaces **48** of the central push up **40** can have a radius R of between about 10 mm and about 30 mm, such as about 20 mm, or 20.6 mm. The wall **44** can be angled inward towards the central longitudinal axis **50** at an angle D of 9.5°, or about 9.5°, relative to the sidewall **30**. The top surface **46** of the pushup **40** can have a diameter E as measured through the central longitudinal axis **50** of 10.13 mm or about 10.13 mm. The top surface **46** can be spaced apart from the support surface **38** to provide a base clearance F of 15.5 mm or about 15.5 mm. The inversion ring **42** can be spaced apart from the support surface **38** at a minimum distance G of 2.27 mm or about 2.27 mm. In other words, at a portion of the inversion ring **42** closest to the support surface **38** prior to the plastic container **10** being hot-filled, the inversion ring **42** is spaced apart from the support surface **38** at a distance of 2.27 mm or about 2.27 mm. As measured through the central longitudinal axis **50**, the contact ring **34** includes a diameter H of 67.41 mm or about 67.41 mm, which can decrease to 66.41 mm or about 66.41 mm after the plastic container **10** is hot-filled.

With reference to FIG. **35** for example, when the triangular features **102** are equilateral triangles each triangular feature **102** can have a height I of 3 mm or about 3 mm, each side **112** can have a suitable corresponding length J, and each triangular feature **102** can define a depth within the inversion ring **42** between the triangular features **102** at sides **112** of 1 mm or up to about 1 mm as measured from an outer surface of the inversion ring **42**. However, the triangular features **102** can each have any suitable height I and define any suitable depth, and the sides **112** can have any suitable length J. The height I, depth, and/or length J of each one of the triangular features **102** can be the same or different. The particular size, shape, number, and distribution of each one of the triangular features **102** can vary depending on the vacuum curve performance desired, and to provide control over flexibility of the base **20** and movement under vacuum to provide smooth actuation of the base **20**.

The triangular features **102** can be formed in any suitable manner, such as with mold **150** of FIG. **36**. The mold **150** includes a plurality of peaks **152** and troughs **154** formed therein to define triangular recesses that are configured to provide the base **20** with the triangular features **102**. Thus, neighboring peaks **152** can be spaced apart at a distance K of 3 mm or about 3 mm to provide the triangular features **102** with the height I of 3 mm or about 3 mm. The troughs **154** can be recessed within the mold **150** at a distance L from the peaks **152** of 1 mm or about 1 mm, thereby providing a blow mold ratio of 3:1 or about 3:1 width (or height) to depth of the triangular features **102**, which can be optimal in some applications. Each of the peaks **152** can be aligned along a first plane P_1, and each of the troughs **154** can be aligned along a second plane P_2. The first and second planes P_1 and P_2 can extend parallel to one another.

To form the plastic container **10** including the triangular features **102**, the portion of the base **20** to become the inversion ring **42** can be positioned against the mold **150**, such that the base **20** extends generally parallel to each of the first and second planes P_1 and P_2. When heated, the PET material from which the plastic container **10** may be formed extends towards the troughs **154**. The triangular recesses defined by the peaks **152** and troughs **154** project the triangular features **102** onto and into the inversion ring **42**, which is formed as a curved surface. The triangular features **102** can be formed in any other suitable manner as well.

As such, the above-described base designs cause initiation of movement and activation of the inversion ring **42** more easily by at least increasing the surface area of the base **20** and, in some embodiments, decreasing the material thickness in these areas. Additionally, the alternative hinges or hinge points also cause the inversion ring **42** to rise or push upward more easily, thereby displacing more volume. Accordingly, the alternative hinges or hinge points retain and improve the initiation and degree of response ease of the inversion ring **42** while optimizing the degree of volume displacement. The alternate hinges or hinge points provide for significant volume displacement while minimizing the amount of vacuum related forces necessary to cause movement of the inversion ring **42**. Accordingly, when container **10** includes the above-described alternative hinges or hinge points, and is under vacuum related forces, the inversion ring **42** initiates movement more easily and planar surfaces **60** can often achieve a generally larger angle **62** than what otherwise is likely, thereby displacing a greater amount of volume.

While not always necessary, in some embodiments base **20** can comprise three grooves **80** substantially parallel to side surfaces **48**. As illustrated in FIGS. **9** and **10**, grooves **80** are equally spaced about central pushup **40**. Grooves **80** have a substantially semicircular configuration, in cross section, with surfaces that smoothly blend with adjacent side surfaces **48**. Generally, for container **10** having a 2.64-inch (67.06 mm) diameter base, grooves **80** have a depth **82**, relative to side surfaces **48**, of approximately 0.118 inch (3.00 mm), typical for containers having a nominal capacity between 16 fl. oz and 20 fl. oz. The inventors anticipate, as an alternative to more traditional approaches, that the central pushup **40** having grooves **80** may be suitable for engaging a retractable spindle (not illustrated) for rotating container **10** about central longitudinal axis **50** during a label attachment process. While three (3) grooves **80** are shown, and is the preferred configuration, those skilled in the art will know and understand that some other number of grooves **80**, i.e., 2, 4, 5, or 6, may be appropriate for some container configurations.

As base **20**, with a relative wall thickness relationship as described above, responds to vacuum related forces, grooves **80** may help facilitate a progressive and uniform movement of the inversion ring **42**. Without grooves **80**, particularly if the wall thickness **66** is not uniform or consistent about the central longitudinal axis **50**, the inversion ring **42**, responding to vacuum related forces, may not move uniformly or may move in an inconsistent, twisted, or lopsided manner. Accordingly, with grooves **80**, radial portions **84** form (at least initially during movement) within the inversion ring **42** and extend generally adjacent to each groove **80** in a radial direction from the central longitudinal axis **50** (see FIG. **11**) becoming, in cross section, a substantially straight surface having angle **62** (see FIG. **12**). Said differently, when one views base **20** as illustrated in FIG. **11**, the formation of radial portions **84** appear as valley-like indentations within

the inversion ring **42**. Consequently, a second portion **86** of the inversion ring **42** between any two adjacent radial portions **84** retains (at least initially during movement) a somewhat rounded partially inverted shape (see FIG. **12**). In practice, the preferred embodiment illustrated in FIGS. **9** and **10** often assumes the shape configuration illustrated in FIGS. **11** and **12** as its final shape configuration. However, with additional vacuum related forces applied, the second portion **86** eventually straightens forming the generally conical shape having planar surfaces **60** sloping toward the central longitudinal axis **50** at angle **62** similar to that illustrated in FIG. **8**. Again, those skilled in the art know and understand that the planar surfaces **60** will likely become somewhat rippled in appearance. The exact nature of the planar surfaces **60** will depend on a number of other variables, for example, specific wall thickness relationships within the base **20** and the sidewalls **30**, specific container **10** proportions (i.e., diameter, height, capacity), specific hot-fill process conditions and others.

The plastic container **10** may include one or more horizontal ribs **602**. As shown in FIG. **31**, horizontal ribs **602** further include an upper wall **604** and a lower wall **606** separated by an inner curved wall **608**. Inner curved wall **608** is in part defined by a relatively sharp innermost radius r_1. In some embodiments, sharp innermost radius r_1 lies within the range of about 0.01 inches to about 0.03 inches. The relatively sharp innermost radius r_1 of inner curved wall **608** facilitates improved material flow during blow molding of the plastic container **10** thus enabling the formation of relatively deep horizontal ribs **602**.

Horizontal ribs **602** each further include an upper outer radius r_2 and a lower outer radius r_3. Preferably both the upper outer radius r_2 and the lower outer radius r**3** each lie within the range of about 0.07 inches to about 0.14 inches. The upper outer radius r_2 and the lower outer radius r_3 may be equal to each other or differ from one another. Preferably the sum of the upper outer radius r_2 and the lower outer radius r_3 will be equal to or greater than about 0.14 inches and less than about 0.28 inches.

As shown in FIG. **31**, horizontal ribs **602** further include an upper inner radius r_4 and a lower inner radius r_5. The upper inner radius r_4 and the lower inner radius r_5 each lie within the range of about 0.08 inches to about 0.11 inches. The upper inner radius r_4 and the lower inner radius r_5 may be equal to each other or differ from one another. Preferably the sum of the upper inner radius r_4 and the lower inner radius r_5 will be equal to or greater than about 0.16 inches and less than about 0.22 inches.

Horizontal ribs **602** have a rib depth RD of about 0.12 inches and a rib width RW of about 0.22 inches as measured from the upper extent of the upper outer radius r_2 and the lower extent of the lower outer radius r_3. As such, horizontal ribs **602** each have a rib width RW to rib depth RD ratio. The rib width RW to rib depth RD ratio is, in some embodiments, in the range of about 1.6 to about 2.0.

Horizontal ribs **602** are designed to achieve optimal performance with regard to vacuum absorption, top load strength and dent resistance. Horizontal ribs **602** are designed to compress slightly in a vertical direction to accommodate for and absorb vacuum forces resulting from hot-filling, capping and cooling of the container contents. Horizontal ribs **602** are designed to compress further when the filled container is exposed to excessive top load forces.

As shown in FIG. **31**, the above-described horizontal rib **602** radii, walls, depth and width in combination form a rib angle A. The rib angle A of an unfilled plastic container **10** may be about 58 degrees. After hot-filling, capping and cooling of the container contents, the resultant vacuum forces cause the rib angle A to reduce to about 55 degrees. This represents a reduction of the rib angle A of about 3 degrees as a result of vacuum forces present within the plastic container **10** representing a reduction in the rib angle A of about 5%. Preferably, the rib angle A will be reduced by at least about 3% and no more than about 8% as a result of vacuum forces.

After filling, it is common for the plastic container **10** to be bulk packed on pallets. Pallets are then stacked atop one another resulting in top load forces being applied to the plastic container **10** during storage and distribution. Thus, horizontal ribs **602** are designed so that the rib angle A may be further reduced to absorb top load forces. However, horizontal ribs **602** are designed so that the upper wall **604** and the lower wall **606** never come into contact with each other as a result of vacuum or top load forces. Instead horizontal ribs **602** are designed to allow the plastic container **10** to reach a state wherein the plastic container **10** is supported in part by the product inside when exposed to excessive top load forces thereby preventing permanent distortion of the plastic container **10**. In addition, this enables horizontal ribs **602** to rebound and return substantially to the same shape as before the top load forces were applied, once such top load forces are removed.

Horizontal lands **610** are generally flat in vertical cross-section as molded. When the plastic container **10** is subjected to vacuum and/or top load forces, horizontal lands **610** are designed to bulge slightly outward in vertical cross-section to aid the plastic container **10** in absorbing these forces in a uniform way.

It should be appreciated that ribs **602** may not be parallel to the base **20**, as illustrated in FIG. **32**. Stated differently, the ribs **602** may be arcuate in one or more directions about the periphery of the container **10** and the sidewall **30** of the container **10**. More specifically, the ribs **602** may be arced such that a center of the ribs **602** is arced upward toward the neck **18**. Such may be the case for all of the ribs **602** in the container **10** when viewed from the same side of the container **10**. However, the ribs **602** may be arched in a different, opposite, downward direction, such as toward a bottom of the container **10**. More specifically, a center of the ribs **602** may be closer to the base **20** than either of sides. In rotating the container **10** and following the ribs **602** for **360** degrees around the container **10**, the ribs **602** may have two (2) equally high, highest points, and two (2) equally low, lowest points.

With additional reference to FIGS. **37-39**, the present teachings include additional vacuum absorbing bases for polymeric hot-fill containers, such as but not limited to, the container **10**. An exemplary vacuum absorbing base for the container **10** is illustrated in FIGS. **37-39** at reference numeral **20**. With particular reference to FIG. **38**, the base **20** includes rigid, central pushup portion **40** arranged at a center of the base **20** such that the longitudinal axis **50** of the container **10** extends through a center of the rigid, central pushup portion **40**. An inversion ring/flexible outer diaphragm **42** is arranged between the rigid, central pushup portion **40** and sidewall **30** of the container **10**.

The central pushup portion **40** includes a top surface **46**, which is furthest from contact ring **34** of the base **20**, which is configured to support the container **10** upright on any suitable support surface, such as support surface **38**. At a center of the top surface **46** is a gate portion **46'** through which the longitudinal axis **50** extends. Extending outward from the top surface **46**, away from the longitudinal axis **50**, is a side surface **48** of the central pushup portion **40**. The side

surface **48** completely surrounds the longitudinal axis **50**. The side surface **48** extends to the flexible outer diaphragm **42**.

The flexible outer diaphragm **42** includes an upper portion **54** and a lower portion **58** at opposite ends thereof. The upper portion **54** is the portion of the flexible outer diaphragm **42** that is furthest from the contact ring **34** and the support surface **38** that the container **10** is seated on. The lower portion **58** is the portion of the flexible outer diaphragm **42** that is closest to the contact ring **34** and the support surface **38**. The flexible outer diaphragm **42** transitions to the side surface **48** of the central pushup portion **40** at the lower portion **58**, and thus the lower portion **58** also serves as a transition point between the central pushup portion **40** and the flexible outer diaphragm **42**. Between the upper portion **54** and the lower portion **58**, the flexible outer diaphragm **42** is curved so as to be convex relative to an exterior of the base **20** in the as-blown position of FIG. **38**. The flexible outer diaphragm **42** can also be straight, concave, s-shaped, or have any other suitable shape. The flexible outer diaphragm **42** is connected to the contact ring **34** by an upstanding circumferential wall/edge **44**.

FIG. **38** illustrates the base **20** in an as-blown position, prior to the container **10** being filled with a hot-fill product. After the container **10** is filled and capped, the base **20** moves inward into the container **10** as the product cools in a manner similar to that described above with respect to the other vacuum absorbing bases according to the present teachings. Specifically, the rigid central pushup portion **40** moves upward along the longitudinal axis **50** towards the aperture or mouth **22** of the container **10**. The central pushup portion **40** is rigid, and thus neither the top surface **46** nor the side surface **48** flexes as the central pushup portion **40** moves into the container **10**. The flexible outer diaphragm **42** is flexible at the upper portion **54**, at the lower portion **58**, and between the upper and lower portions **54** and **58**. Thus as the base **20** moves inward in response to vacuum within the container **10**, the flexible outer diaphragm **42** flexes to accommodate movement of the base **20** into the container **10**.

To facilitate movement of the base **20** into the container **10**, the flexible outer diaphragm **42** may include a plurality of surface features **102**. The surface features **102** are generally arranged in columns extending along the flexible outer diaphragm **42** between the upper portion **54** and the lower portion **58**. Some of the features **102** can also be arranged at a portion of the side surface **48** proximate to the lower portion **58**. The features **102** may be any suitable surface features configured to facilitate flexion of the base **20**. For example and as illustrated in FIGS. **37-39**, the features **102** can be circular "dimples" or triangles extending either into or out of the container **10**. The base **20** may further include a plurality of base ribs **120** extending along the flexible outer diaphragm **42** between the upper and lower portions **54** and **58**. The base ribs **120** may extend into, or protrude from, the base **20**. The base ribs **120** can be arranged in any suitable manner, such as with one base rib **120** arranged between neighboring features **120**.

The base **20** may further include surface features in the form of outer ribs **122** arranged along the upstanding circumferential wall **44**. The outer ribs **122** can be arranged to protrude outward from the wall **44** towards the central longitudinal axis **50** as illustrated, or can be arranged to extend into the wall **44** away from the central longitudinal axis **50**. As illustrated in FIGS. **37** and **39**, the base **20** may further include center ribs **124**. The center ribs **124** are arranged at the side surface **48** of the central pushup portion **40**, and may protrude into, or extend from, the side surface **48**. FIGS. **40** and **41** illustrate the base **20** without ribs **124**, ribs **122**, ribs **120**, and/or dimples **102**, which are thus optional.

The base **20** of FIGS. **37-41** is particularly configured and dimensioned to provide numerous advantages. With reference to FIG. **38** for example, the side surface **48** is angled outward from the longitudinal axis **50** at a draft angle M of 30°-35°. For example, the draft angle M can be 33°, or about 33°. Draft angle N measured through the longitudinal axis **50** between opposing portions of the side surface **48** is 60°-70°, such as about 66°. The draft angles M and N provide numerous advantages, such as improved mold release during manufacture of the base **20**, which permits higher base mold temperatures as compared to conventional vacuum absorbing bases. For example, angles M and N permit base mold temperatures of 170° F.-200° F., which is 20° F.-40° F. higher than conventional vacuum absorbing bases. Higher base mold temperatures advantageously provide enhanced base crystallinity and thermal stability (which increases strength and definition of the base **20**), and improved forming definition. Increasing the strength of the base **20** advantageously allows less material to be used in the base **20**, reduces thickness of the base **20**, and reduces the weight of the base **20**. The increased strength of the base **20** allows the base **20** to better resist any deformations caused by fill pressure, which improves base retention and minimizes rollout, and absorbs internal vacuum caused by hot filling and subsequent cooling.

In one exemplary embodiment, the base **20** has a maximum outer diameter 0 of 2.7 inches, or about 2.7 inches. The central pushup portion **40** has a diameter P measured across the longitudinal axis **50** between opposing lower portions **58** of 1.4 inches, or about 1.4 inches. Diameter Q measured across the longitudinal axis **50** between opposing upper portions **54** is 2.3 inches, or about 2.3 inches. As explained above, the lower portion **58** is the transition point between the central pushup portion **40** and the flexible outer diaphragm **42**. The lower portion/transition point **58** is arranged generally halfway between the longitudinal axis **50** and the sidewall **30** of the container **10**. The lower portion/transition point **58** is the portion of the flexible outer diaphragm **42** closest to the support surface **38**.

The rigid central pushup portion **40** advantageously resists downward movement and deformation of the base **20** under hot-fill pressures, which improves base clearance of the base **20**. In the as-blown position of FIG. **39**, the top surface **46** is spaced apart from the support surface **38**, which extends across the contact ring **34** when the base **20** is seated on the support surface **38**, at a distance R measured from the gate **46'** of 0.5 inches, or about 0.5 inches. The upper portion **54** is spaced apart from the support surface **38** at a distance S of 0.24 inches, or about 0.24 inches. The lower portion **58** is spaced apart from the support surface **38** at a distance T, which is 0.07 inches to 0.09 inches, such as 0.08 inches or about 0.08 inches.

The central pushup portion **40** has an actual surface area of 18.5 cm^2, or about 18.5 cm^2. The flexible outer diaphragm **42** has an actual surface area of 22.7 cm^2, or about 22.7 cm^2. Thus the surface area of the flexible outer diaphragm **42** is about 20%-25%, such as 23%, greater than the surface area of the central pushup portion **40**.

As illustrated in FIG. **38**, the base **20** can have a width, as measured along a line "W" extending from upper portion **54** to top surface **46**, of about 0.96 inches. The base **20** can have a depth of about 0.31 inches, as measured along line "D" extending between the line "W" and lower portion **58**. The

ratio of the width to the depth is in a range of 0.28 to 0.36, or about 0.32. This width to depth ratio enables improved control over the uniformity and thickness of material at the flexible diaphragm **42** during blow molding.

The foregoing description of the embodiments has been provided for purposes of illustration and description. It is not intended to be exhaustive or to limit the invention. Individual elements or features of a particular embodiment are generally not limited to that particular embodiment, but, where applicable, are interchangeable and can be used in a selected embodiment, even if not specifically shown or described. The same may also be varied in many ways. Such variations are not to be regarded as a departure from the invention, and all such modifications are intended to be included within the scope of the invention.

What is claimed is:

1. A polymeric container comprising:

an upper portion defining an opening to an interior volume of the container;

a base movable to accommodate vacuum forces generated within the container thereby decreasing the volume of the container;

a substantially cylindrical sidewall extending between the upper portion and the base;

a rigid, central pushup portion of the base at an axial center of the base, a central longitudinal axis of the container extends through a center of the central pushup portion;

a flexible diaphragm of the base extending outward from the central pushup portion; and

a side surface of the central pushup portion extending outward and away from the longitudinal axis of the container to the flexible diaphragm at a draft angle of 30° to 35° relative to the longitudinal axis;

wherein the side surface of the central pushup portion transitions to the flexible diaphragm at a lowermost portion of the base, with respect to portions of the base that are inward of a contact ring of the base the lowermost portion of the base is furthest from the upper portion of the container.

2. The polymeric container of claim **1**, wherein the draft angle is about 33°.

3. The polymeric container of claim **1**, wherein the base is molded at a temperature of 170° F. to 200° F.

4. The polymeric container of claim **1**, wherein the flexible diaphragm is curved convex relative to an outer surface of the base.

5. The polymeric container of claim **1**, wherein the side surface of the central pushup portion transitions to the flexible diaphragm halfway between the central longitudinal axis of the container and an outer diameter of the container.

6. The polymeric container of claim **1**, wherein the lowermost portion is halfway between the central longitudinal axis of the container and an outer diameter of the container.

7. The polymeric container of claim **1**, wherein the lowermost portion of the base is configured such that when the contact ring of the polymeric container is seated on a planar support surface, the lowermost portion is spaced apart from the planar support surface by about 0.07 inches to about 0.09 inches.

8. The polymeric container of claim **1**, wherein the lowermost portion of the base is configured such that when the contact ring of the polymeric container is seated on a planar support surface, the lowermost portion of the base is spaced apart from the planar support surface by about 0.08 inches.

9. The polymeric container of claim **1**, wherein the flexible diaphragm has an actual surface area that is about 20% to about 25% greater than an actual surface area of the rigid central pushup portion.

10. The polymeric container of claim **1**, wherein the flexible diaphragm has an actual surface area that is 23% greater than an actual surface area of the rigid central pushup portion.

11. The polymeric container of claim **1**, wherein the flexible diaphragm includes a plurality of surface features configured to facilitate flexion of the flexible diaphragm in response to vacuum forces within the container.

12. The polymeric container of claim **11**, wherein the surface features are configured as at least one of circular dimples and triangles.

13. The polymeric container of claim **12**, wherein the surface features are arranged in columns extending radially away from the longitudinal axis of the container; and

wherein the base further includes base ribs extending radially away from the longitudinal axis, at least one base rib is arranged between two neighboring columns of surface features.

14. The polymeric container of claim **1**, wherein the side surface of the central pushup portion is circular and surrounds the longitudinal axis.

15. The polymeric container of claim **1**, wherein the side surface of the central pushup portion includes a plurality of center ribs.

16. The polymeric container of claim **1**, wherein the base has a width to depth ratio of 0.28 to 0.36.

17. The polymeric container of claim **16**, wherein the base has a width of about 0.96 inches and a depth of about 0.31 inches.

18. A polymeric container comprising:

an upper portion defining an opening to an interior volume of the container;

a base movable to accommodate vacuum forces generated within the container thereby decreasing the volume of the container;

a substantially cylindrical sidewall extending between the upper portion and the base;

a rigid, central pushup portion of the base at an axial center of the base, a central longitudinal axis of the container extends through a center of the central pushup portion; and

a flexible diaphragm of the base extending outward from the central pushup portion;

wherein the flexible diaphragm has an actual surface area that is about 20% to about 25% greater than an actual surface area of the rigid central pushup portion.

19. The polymeric container of claim **18**, wherein the actual surface area of the flexible diaphragm is about 23% greater than the actual surface area of the rigid central pushup portion.

20. The polymeric container of claim **18**, further comprising:

a side surface of the central pushup portion extending outward and away from the longitudinal axis of the container to the flexible diaphragm at a draft angle relative to the longitudinal axis that is greater than 30° and less than 35°.

21. The polymeric container of claim **18**, wherein the flexible diaphragm is curved convex relative to an outer surface of the base.

22. The polymeric container of claim **18**, wherein the side surface of the central pushup portion transitions to the

flexible diaphragm halfway between the central longitudinal axis of the container and an outer diameter of the container.

23. The polymeric container of claim **18**, wherein the side surface of the central pushup portion transitions to the flexible diaphragm at a lowermost portion of the base, with respect to portions of the base that are inward of a contact ring of the base the lowermost portion of the base is furthest from the upper portion of the container.

24. The polymeric container of claim **23**, wherein the lowermost portion is halfway between the central longitudinal axis of the container and an outer diameter of the container.

25. The polymeric container of claim **23**, wherein the lowermost portion of the base is configured such that when the contact ring of the polymeric container is seated on a planar support surface, the lowermost portion is spaced apart from the planar support surface by about 0.07 inches to about 0.09 inches.

26. The polymeric container of claim **18**, wherein the flexible diaphragm includes a plurality of surface features configured to facilitate flexion of the flexible diaphragm in response to vacuum forces within the container.

27. The polymeric container of claim **18**, wherein the rigid, central push-up portion includes a plurality of center ribs.

28. The polymeric container of claim **18**, wherein the base has a width to depth ratio of 0.28 to 0.36.

29. The polymeric container of claim **18**, wherein the base has a width of about 0.96 inches and a depth of about 0.31 inches.

30. A polymeric container comprising:

an upper portion defining an opening to an interior volume of the container;

a base movable to accommodate vacuum forces generated within the container thereby decreasing the volume of the container;

a substantially cylindrical sidewall extending between the upper portion and the base;

a rigid, central pushup portion of the base at an axial center of the base, a central longitudinal axis of the container extends through a center of the central pushup portion; and

a flexible diaphragm of the base extending outward from the central pushup portion;

wherein the central pushup portion transitions to the flexible diaphragm halfway between the central longitudinal axis of the container and an outer diameter of the container.

31. The polymeric container of claim **30**, wherein the central pushup portion transitions to the flexible diaphragm at a lowermost portion of the base, with respect to portions of the base that are inward of a contact ring of the base the lowermost portion of the base is furthest from the upper portion of the container.

32. The polymeric container of claim **31**, wherein the lowermost portion is halfway between the central longitudinal axis of the container and the outer diameter of the container.

33. The polymeric container of claim **31**, wherein the lowermost portion of the base is configured such that when the contact ring of the polymeric container is seated on a planar support surface, the lowermost portion is spaced apart from the planar support surface by about 0.07 inches to about 0.09 inches.

34. The polymeric container of claim **30**, further comprising:

a side surface of the central pushup portion extending outward and away from the longitudinal axis of the container to the flexible diaphragm at a draft angle of greater than 30° and less than 35° relative to the longitudinal axis.

35. The polymeric container of claim **30**, wherein the flexible diaphragm is curved convex relative to an outer surface of the base.

36. The polymeric container of claim **30**, wherein the flexible diaphragm has an actual surface area that is 23% greater than an actual surface area of the rigid central pushup portion.

37. The polymeric container of claim **30**, wherein the flexible diaphragm includes a plurality of surface features configured to facilitate flexion of the flexible diaphragm in response to vacuum forces within the container.

38. The polymeric container of claim **30**, wherein the rigid, central push-up portion includes a plurality of center ribs.

39. The polymeric container of claim **30**, wherein the base has a width to depth ratio of 0.28 to 0.36.

40. The polymeric container of claim **30**, wherein the base has a width of about 0.96 inches and a depth of about 0.31 inches.

* * * * *