B. E. MORELAND.

ADVERTISING DEVICE.

APPLICATION FILED MAR. 3, 1917.

1,238,177. Patented Aug. 28, 1917.

Fig. 1.

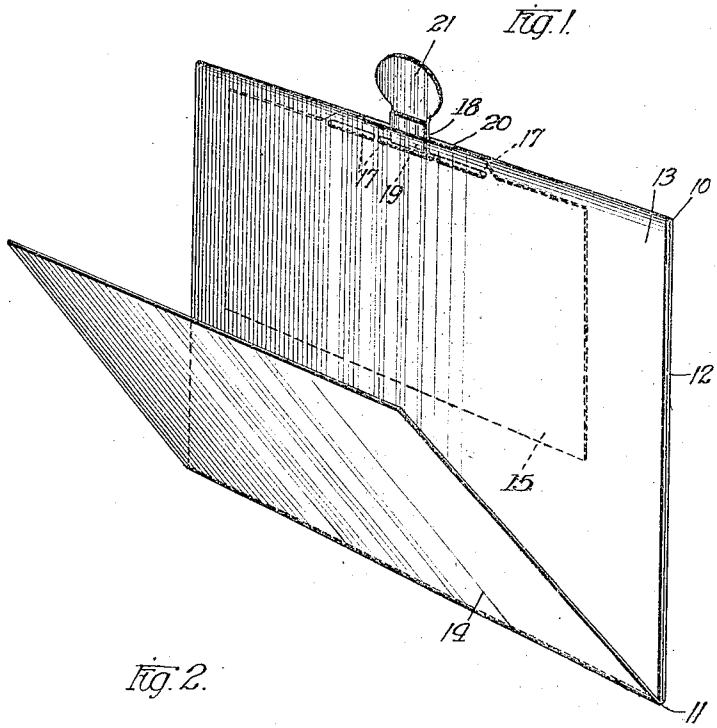

Fig. 3.

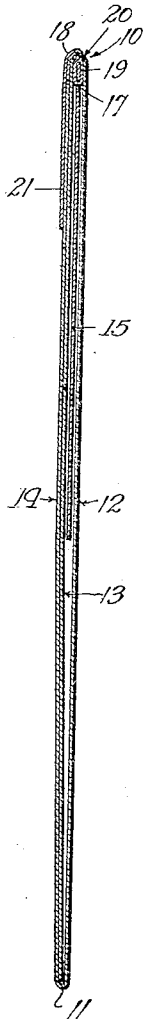

Fig. 2.

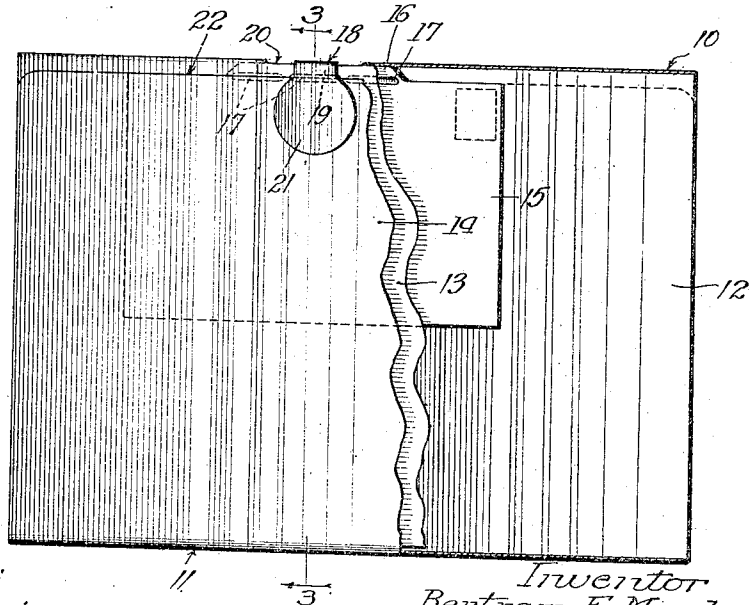

Witnesses:
Robert H. Weir
Arthur W. Parlson

Inventor
Bertram E. Moreland
James R. Offield. Atty.

UNITED STATES PATENT OFFICE.

BERTRAM E. MORELAND, OF CHICAGO, ILLINOIS, ASSIGNOR TO THE MORELAND ADVERTISING COMPANY, OF CHICAGO, ILLINOIS, A CORPORATION OF ILLINOIS.

ADVERTISING DEVICE.

1,238,177. Specification of Letters Patent. **Patented Aug. 28, 1917.**

Application filed March 3, 1917. Serial No. 152,202.

To all whom it may concern:

Be it known that I, BERTRAM E. MORELAND, a citizen of the United States, and a resident of Chicago, in the county of Cook and State of Illinois, have invented certain new and useful Improvements in Advertising Devices, of which the following is a specification.

My invention relates to advertising devices, particularly to that class in which a sheet of comparatively heavy paper has a communication or advertisement written thereon and is then folded to form a mailing inclosure or envelop and which also supports and conceals a return postal card.

Advertising devices of this class have been made (see my Letters Patent No. 1,204,584, of November 14, 1916) in which a gummed strip or paster extends through a slot in one of the folding edges of the sheet to serve at its inner end to support the return card and to serve at its outer end for sealing the folded sheet. With this arrangement, the return card, after opening of the inclosure, is removed by tearing the inner end of the paster so that a part of the paster remains on the card, this giving the card an unsightly appearance. Furthermore, the paster is only of a single thickness where it folds over the edge of the folded sheet, and it becomes worn during passage through the mails and oftentimes torn before the communication reaches its destination.

The object of my invention is to provide a more practical and efficient means for supporting the return card and for strengthening the supporting paster. This I preferably obtain by providing an extension or tab on the card separated from the card body by a line of perforations so that it can be readily torn away, and looping the inner end of a paster through one of the perforations, the paster loop being of sufficient length to provide double walls where it passes through the slot and is folded. With this construction the paster resists wear and tear during transit through the mails and when the communication is opened the tab is torn from the card and takes with it the paster end so that the card has its natural neat appearance.

The various features of my invention are embodied in a structure disclosed on the accompanying drawing, in which drawing—

Figure 1 is a perspective view showing the sheet just before final folding and sealing thereof.

Fig. 2 is a side elevational view of the sealed communication with parts broken away, and

Fig. 3 is an enlarged sectional view on plane 3—3, Fig. 2.

In the arrangement shown, a rectangular sheet of comparatively heavy paper is creased along the lines 10 and 11 to form the middle and end sections 12, 13 and 14, advertising or other communication printing appearing on the inside of the sections, and the sheet being closed by folding down the top section 13 and folding up the lower section 14, thus forming a mailing envelop or inclosure for the communication. The return card 15 is usually of ordinary postal card size and in accordance with my invention this card has the extension or tab 16 at its upper edge separated from the card body by perforations 17 which enable the tab to be readily torn from the card. A gummed band or paster 18 has its inner end inserted through one of the perforations and folded to bring its gummed surfaces together to form the loop 19 whereby the paster is secured to the card. Before folding the communication sheet the outer end of the paster is inserted through the slot 20 in the folding line 10, and then after the card sections are folded together, such outer end of the paster is brought downwardly and pasted against the outer section 14, the end of the paster being preferably enlarged, as indicated at 21. When forming the loop 19 a sufficient length is folded to provide a double wall or thickness where the paster extends through the slot 20 and where the paster is folded over to bring its end 21 into sealing engagement with the folded sheet. The paster has therefore double strength at this point and will resist wear during passage through the mails and will not tear. Preferably the section 14 of the sheet is of slightly less width than the other sections so that when folded its edge 22 will be below the folding line 10, and the fold for the loop 19 is of such length that the double thickness of the paster will extend only as far as the edge 22. Such double thickness between the folding line 10 and the edge 22 will prevent the paster from bending sharply around the edge 22 and wearing or cutting of the paster at that point. The envelop can readily be

opened by tearing the single thickness of paster along the edge 22. After opening and unfolding the return card with the paster stub thereon is withdrawn and the tab 16 and the paster stub removed by tearing along the perforations 17. The return card is then of ordinary and neat appearance. If the return card is torn from the tab while passing through the mails the tab 16 serves as a locking member to hold the sections of the device together.

Having described my invention, I desire to obtain the following claims by Letters Patent:

1. A device of the class described comprising a sheet of paper folded to form a mailing envelop and having a slit, a return card having a tab separated from the card body by a line of perforations, and a sealing paster secured at its inner end to said tab and having its outer end extended through said slit to be folded over against the outer folded section of the sheet to seal the envelop, said perforations adapting said tab to be readily torn from the card body after opening of the envelop and said tab preventing the unfolding of the mailing envelop in the event of accidental separation of the card.

2. A device of the class described comprising a sheet of paper for receiving a printed communication on its inner face and for being folded to form a mailing envelop and having a slit, a return card for the envelop, a tab on said return card separated from the card body by a line of perforations and serving as a locking bar, a sealing paster looped at its inner end through one of said perforations and having its outer end extended through said slit to be folded over and secured to the outer folded section of the sheet to seal the envelop.

3. A device of the class described comprising a sheet of paper for receiving printed communication on its inner face and to be folded to form a mailing envelop and having a slit, a return card having a tab separated from the card body by a line of perforations, a paster having its inner end inserted through one of said perforations and folded over with its gummed surfaces secured together to form a supporting loop for the card, the outer end of said paster extending through said slit to be folded over and secured to the outer folded section of the envelop to seal the envelop, said loop being of sufficient length to provide double thickness for the paster where it passes through the slit and where it is folded into sealing position, said perforations enabling the tab and loop end of the paster to be readily removed from the card body after the envelop has been opened and said tab preventing the unfolding of the mailing envelop in the event of the accidental separation of the card.

In witness whereof I hereunto subscribe my name this 27th day of February, A. D. 1917.

BERTRAM E. MORELAND.

Copies of this patent may be obtained for five cents each, by addressing the "Commissioner of Patents, Washington, D. C."