May 24, 1938. J. H. NICHOLSON 2,118,618

WRINGER MOP

Filed Nov. 23, 1936

Fig. 1

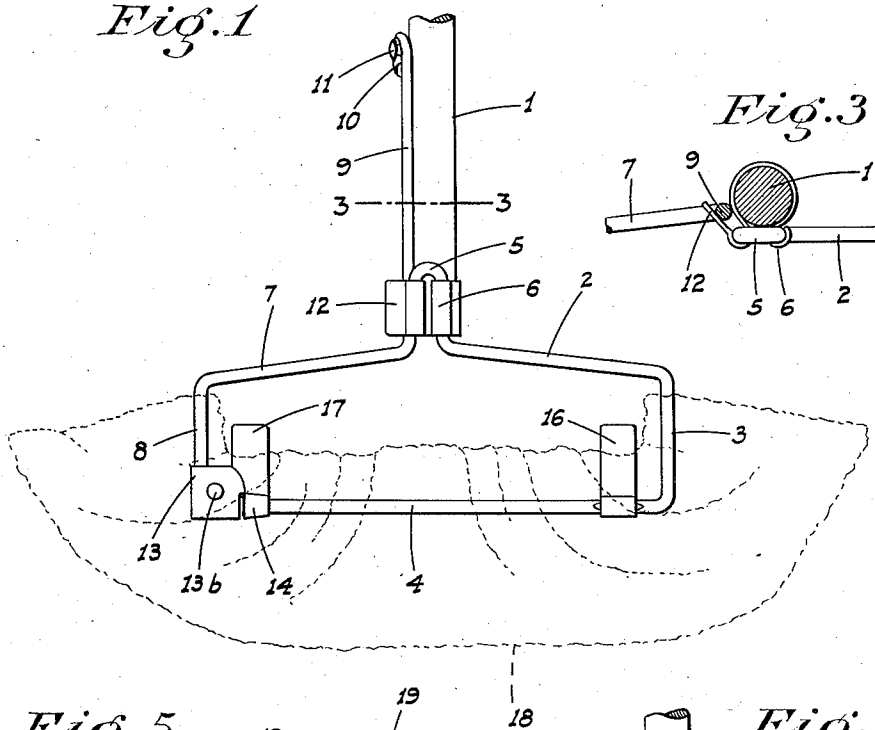

Fig. 3

Fig. 5

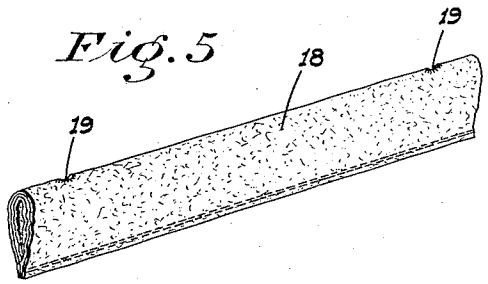

Fig. 2

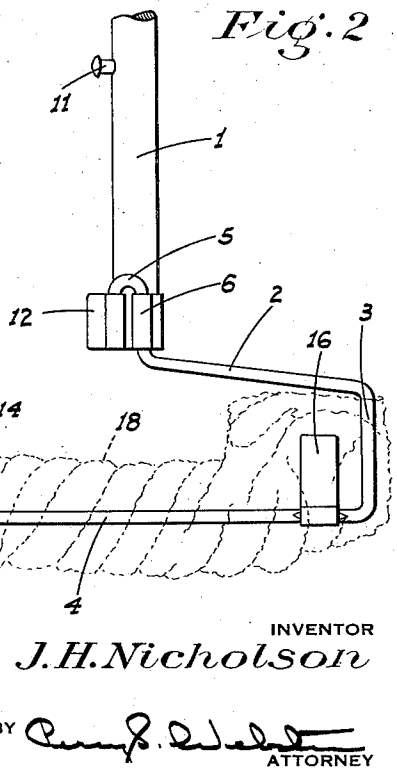

Fig. 4

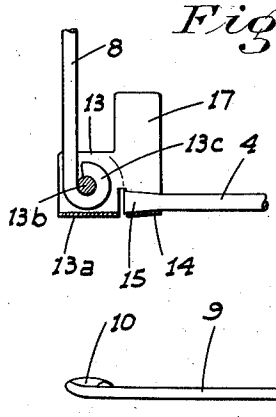

INVENTOR

J. H. Nicholson

BY

ATTORNEY

Patented May 24, 1938 2,118,618

UNITED STATES PATENT OFFICE

2,118,618

WRINGER MOP

James Henry Nicholson, San Francisco, Calif.

Application November 23, 1936, Serial No. 112,251

6 Claims. (Cl. 15—120)

This invention relates generally to mops and, in particular, is directed to an improved wringer mop.

The prinicipal object of my invention is to provide a wringer mop in which the mop holder comprises a minimum of parts and yet is so constructed that the mop cloth may be quickly and easily wrung.

An additional object of my invention is to provide an improved form of mop cloth and one especially designed for use in connection with my device.

A further object of the invention is to produce a simple and inexpensive device and yet one which will be exceedingly effective for the purpose for which it is designed.

These objects I accomplish by means of such structure and relative arrangement of parts as will fully appear by a perusal of the following specification and claims.

In the drawing similar characters of reference indicate corresponding parts in the several views:

Fig. 1 is a front elevation of the device; the mop holder and cloth being in position for use.

Fig. 2 is a front elevation of the device with the mop holder shown in wringing position.

Fig. 3 is a fragmentary transverse section on line 3—3 of Fig. 1.

Fig. 4 is a fragmentary elevation, partly in section, of the rotatably mounted, swivel connection which comprises an element of the mop holder.

Fig. 5 is a perspective view of my improved form of mop cloth.

Referring now more particularly to the characters of reference on the drawing, my improved wringer mop comprises a relatively long handle 1 having the mop holder secured to its lower end; the mop holder including a fixed frame portion and a movable frame portion, both being of relatively heavy rod bent to shape.

The fixed frame portion comprises a laterally projecting arm 2, disposed substantially radial to handle 1, a downwardly extending arm section 3 disposed substantially parallel to handle 1, and a bottom rod 4 extending from the outer end of arm 3 transversely of the handle and disposed substantially symmetrical to the axial plane thereof. The inner end of arm 2 is secured to the handle by means of a U-shaped member 5 upstanding from said end of the arm, and a clip 6 encircling the handle and engaging said member.

The movable frame portion of the mop holder comprises a laterally projecting arm 7 and a depending arm 8 corresponding to arms 2 and 3 but disposed on the other side of the handle 1. The inner end of arm 7 is formed with a normally upwardly projecting extension 9 parallel to and engaging against the adjacent side of handle 1.

The upper end of extension 9 is bent to form an eye 10 which removably engages on a headed, laterally extending pin 11 on handle 1. A wing 12 is formed as an integral part of clip 6 and is disposed so as to frictionally engage the extension 9 from the backside of the clip when the latter is in normal position, as illustrated in Fig. 1.

The adjacent ends of rod 4 and arm 8 are secured together in the following manner: A unit comprising spaced side plates 13 connected by a bottom plate 13*a* and having a pin 13*b* extending between said plates and through an eye 13*c* on the end of arm 8 forms a pivotal connection with said arm, while an integral tapered sleeve 14 engages about an enlarged head 15 on the adjacent end of rod 4 and provides a swivel connection therewith.

A fixed prong 16 is mounted on the rod 4 adjacent arm 3; said prong projecting upwardly. Another like prong 17 is formed integral with the plates 13 and also projects upwardly when the movable frame portion is disposed in ordinary position, as in Fig. 1.

The mop cloth, indicated at 18, is made of a plurality of sheets of material, such as toweling, sewn together in tubular form; the cloth having an opening 19 through the side adjacent each end. This mop cloth is normally disposed on rod 4 with prongs 16 and 17 projecting through openings 19.

Use

My improved mop, after use, is wrung in the following manner:

The extension 9 is disengaged from pin 11 and wing 12 and the movable portion of the frame is then swung outward until arm 8 is axially alined with rod 4, as shown in Fig. 2; the pin 13*b* being the pivotal point. In such position, the arm 7 is substantially parallel to handle 1 and forms with extension 9 what is, in effect, a crank; the extension serving as the crank handle.

By grasping the extension and moving the same with a cranking motion, arm 7 rotates, which in turn rotates the swivel connection and the projecting prong 17. As prong 16 is fixed on rod 4, the mop cloth, through which the prongs project, is soon twisted tightly about the rod 4 and effectively wrung.

When the wringing is complete, the towel cloth

is unwound by a cranking movement in the other direction and the movable frame portion returned to its normal position.

To remove or mount the cloth on the holder, the movable frame portion is disposed in an open position, so that the cloth may be slid along said portion and into or out of position on the main supporting arm 4.

From the foregoing description it will be readily seen that I have produced such a device as substantially fulfills the objects of the invention as set forth herein.

While this specification sets forth in detail the present and preferred construction of the device, still in practice such deviations from such detail may be restored to as do not form a departure from the spirit of the invention, as defined by the appended claims.

Having thus described my invention, what I claim as new and useful and desire to secure by Letters Patent is:

1. In a mop, a handle, a mop holder including a substantially horizontal rod, a fixed supporting arm extending from one end of the rod to rigid connection with the handle, an upstanding prong fixed on the rod adjacent said one end, another supporting arm ordinarily extending from adjacent the other end of the rod to releasable connection with the handle, another ordinarily upstanding prong rotatably mounted on the rod adjacent said other end, and means connecting the other prong and the adjacent end of the other arm to permit said other arm, when released from the handle, to be rotated about the rod as an axis and thereby rotating said other prong.

2. A device as in claim 1 characterized by said means mounting said other arm for pivotal movement when released from the handle to a position with the adjacent ends of said arm and the rod in axial alinement; the said arm being shaped to serve as a crank when in such position.

3. In a mop, a handle, a mop holder including a substantially horizontal rod, a fixed supporting arm extending from one end of the rod to rigid connection with the handle, an upstanding prong fixed on the rod adjacent said one end, another supporting arm ordinarily extending from adjacent the other end of the rod to releasable connection with the handle, a pivotal connection on the end of said other arm adjacent the rod, swivel means securing said pivotal connection to the adjacent end of the rod, said pivotal connection being arranged to permit said other arm when released from the handle to swing outward until the adjacent ends of the rod and said other arm are in axial alinement, and an ordinarily upstanding prong mounted in fixed relation with said swivel connection; said other arm being shaped so as to serve as a crank when swung outward.

4. In a mop, a handle, a mop holder including a substantially horizontal rod, a fixed supporting arm extending from one end of the rod to rigid connection with the handle, an upstanding prong fixed on the rod adjacent said one end, another prong turnable on said rod adjacent its other end, another arm ordinarily projecting upward from adjacent the other end of the rod to adjacent the handle, means included with said other prong pivotally mounting said other arm on the rod for outward swinging movement to a position in axial alinement with the rod, and rotatable relative thereto, an extension projecting from the upper end of said other arm adjacent the handle up the same and parallel thereto, and means to releasably secure the extension to the handle.

5. A mop holder including a substantially horizontal rod, a handle above and rigidly attached to the rod, an upwardly projecting radial prong fixed on the rod adjacent one end thereof, another radial prong rotatably mounted on the rod adjacent the other end and ordinarily projecting upward, and a manual element operatively connected to said other prong for rotating the same.

6. A mop holder including a substantially horizontal rod, a handle above and rigidly attached to the rod, an upwardly projecting radial prong fixed on the rod adjacent one end thereof, another radial prong rotatably mounted on the rod adjacent the other end, a manual element operatively connected to said other prong for rotating the same, and means to releasably connect said element with the handle in position to hold said other prong in an upwardly projecting direction.

JAMES HENRY NICHOLSON.