Office de la Propriété Intellectuelle du Canada
Un organisme d'Industrie Canada

Canadian Intellectual Property Office
An agency of Industry Canada

CA 2174772 C 2002/05/14

(11)(21) 2 174 772

(12) BREVET CANADIEN
CANADIAN PATENT

(13) C

(86) Date de dépôt PCT/PCT Filing Date: 1995/02/01
(87) Date publication PCT/PCT Publication Date: 1995/08/10
(45) Date de délivrance/Issue Date: 2002/05/14
(85) Entrée phase nationale/National Entry: 1996/04/22
(86) N° demande PCT/PCT Application No.: US 1995/001329
(87) N° publication PCT/PCT Publication No.: 1995/021316
(30) Priorité/Priority: 1994/02/01 (08/189,802(CON)) US

(51) Cl.Int.^{6}/Int.Cl.^{6} E06B 11/08

(72) Inventeur/Inventor:
Hering, Martin, US

(73) Propriétaire/Owner:
Hering, Martin, US

(74) Agent: BORDEN LADNER GERVAIS LLP

(54) Titre : DISPOSITIF DE SIGNALISATION DESTINE A UN TOURNIQUET ET SON MODE D'UTILISATION
(54) Title: INDICIA DEVICE FOR TURNSTILE AND METHOD OF USE

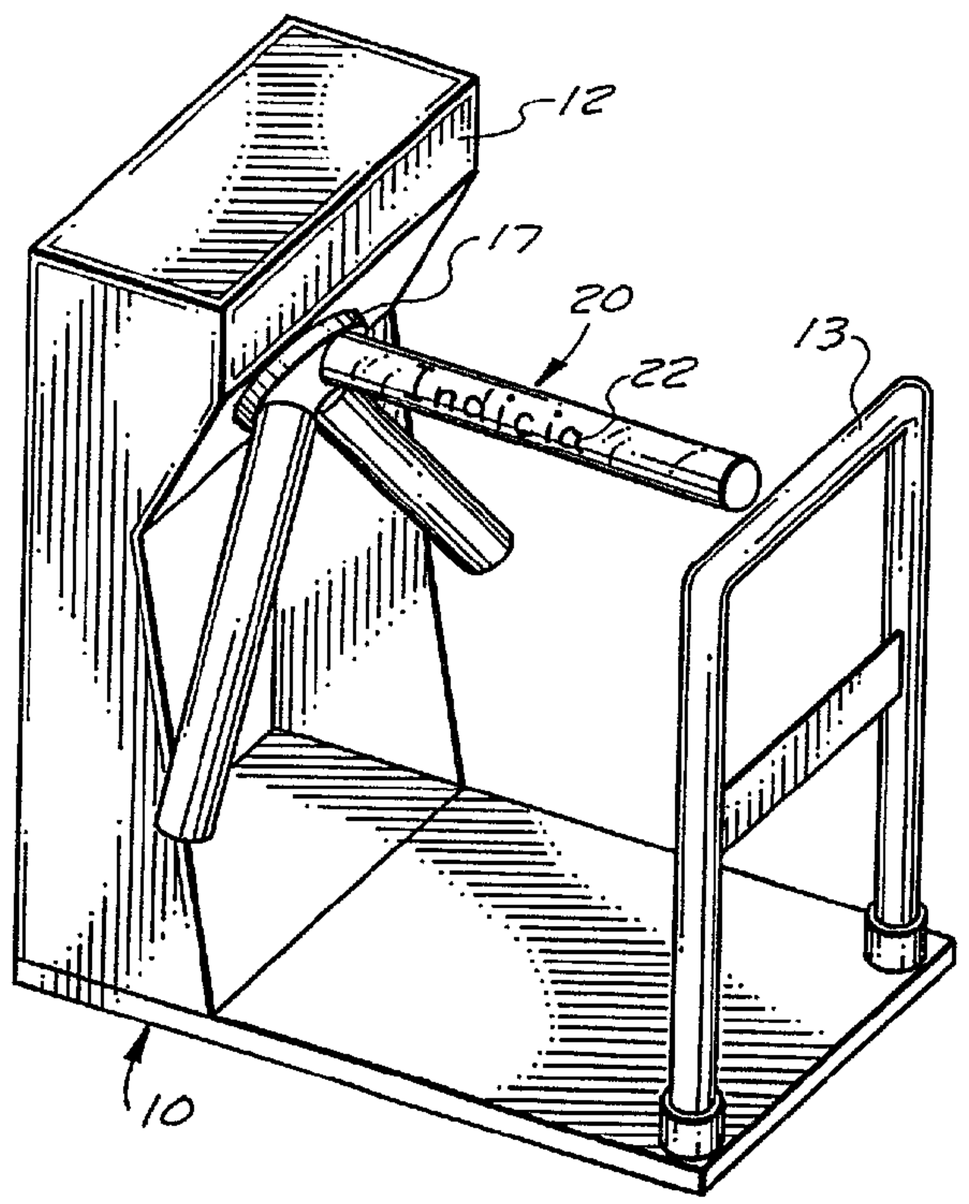

(57) Abrégé/Abstract:
A novel indicia device and a novel turnstile incorporating such device are both provided herein. The indicia device includes a tubular sleeve containing indicia and receivable about the arm, the tubular sleeve including an arm-receiving end and an opposing free end. Coupling means are provided for coupling the sleeve to the arm. The turnstile for carrying indicia includes a housing. An arm is rotatably carried by the housing, the arm having an arm-proximal end which is operable with, and is carried within, the housing, and an arm-distal end extending into a passageway which is adjacent to the housing for blocking passage of a person therethrough. A cover is slidably-disposed on the arm-distal end which is separated from the arm-proximal end for positioning within the passageway. Indicia is carried by the cover, the indicia being positioned for viewing by a person moving through the passageway.

ABSTRACT

A novel indicia device and a novel turnstile incorporating such device are both provided herein. The indicia device includes a tubular sleeve containing indicia and receivable about the arm, the tubular sleeve including an arm-receiving end and an opposing free end. Coupling means are provided for coupling the sleeve to the arm. The turnstile for carrying indicia includes a housing. An arm is rotatably carried by the housing, the arm having an arm-proximal end which is operable with, and is carried within, the housing, and an arm-distal end extending into a passageway which is adjacent to the housing for blocking passage of a person therethrough. A cover is slidably-disposed on the arm-distal end which is separated from the arm-proximal end for positioning within the passageway. Indicia is carried by the cover, the indicia being positioned for viewing by a person moving through the passageway.

(a) TITLE OF THE INVENTION

INDICIA DEVICE FOR TURNSTILE AND METHOD OF USE

(b) TECHNICAL FIELD TO WHICH THE INVENTION RELATES

This invention relates to methods and devices for displaying indicia. More particularly, the present invention relates to advertising on turnstiles. In a further and more specific aspect, the present invention concerns an apparatus containing visual information which is mounted on the arms of turnstile.

(c) BACKGROUND ART

Access to public as well as many private facilities is often controlled by devices conventionally referred to as "turnstiles". Turnstiles consist of a housing which is placed in an accessway to define a narrow passageway. This passageway is controlled by an arm extending thereacross. In order to move through the passageway, the arm of the turnstile must be moved aside. Typically, turnstiles have a revolving plate which is mounted in the housing from which a number of arms extend. An individual moves into the arm presently blocking the passageway, and moves it downwardly and away, thereby rotating the rotating plate. The individual is now free to progress through the passageway, with a subsequent arm rotating upwardly behind the individual to block the passageway from following individuals.

Turnstiles work well to control the flow of a crowd and/or charge and/or collect admission. However, they also use a large amount of space which could be used for other purposes. Specifically, at the present time, space is at a premium for advertisements. Advertisements generate a large volume of revenue in public event facilities, and are very much an integral segment of our society. Advertisements inform as well as entice individuals. High visibility locations in which to advertise are continually being sought, with prime location subject to a great deal of competition between advertisers.

Advertisements are presented in a wide variety of ways, the most common of which are placing posters in a case or simply tacking a poster to a wall. These are

traditional and well-established methods. However, these methods are limited by the amount of wall space which is available. Recently, video monitors have been used to provide a plurality of ever-changing advertisements. This method, while very effective, is also very expensive. Generally-speaking, advertisements are prevalent throughout society, with most available space already allocated for advertisements. While there may be some space available, it is generally not highly desirable, being out of the way or less visible than preferred.

Turnstiles occupy a position which is highly trafficked, since everyone must pass through the turnstiles, and are highly visible since most people look at the turnstiles as they pass through. Conventional turnstiles, however, do not take advantage of their premier location, and while they perform their blocking functions admirably, they take up advertising space, and more importantly, they take the eyes of people off wall advertisements as people concentrate on passing the turnstile.

(d) DESCRIPTION OF THE INVENTION

It would be highly advantageous, therefore, to remedy the foregoing and other deficiencies inherent in the prior art.

Accordingly, it is an object of one broad aspect of the present invention to provide a new and improved barrier device, e.g., a turnstile.

An object of a second broad aspect of the present invention is to provide an indicia device for use on a conventional turnstile.

An object of a third broad aspect of the present invention is to provide a method of advertising on a barrier device, e.g., a turnstile.

An object of a fourth broad aspect of the present invention is to provide a relatively-inexpensive and highly-effective method of advertising.

An object of a fifth broad aspect of the present invention is to provide a relatively-inexpensive indicia device for use on barrier devices, e.g., turnstiles.

An object of a sixth broad aspect of the present invention is to provide an indicia device which is easily installable on a substantially-any turnstile apparatus.

An object of a seventh broad aspect of the present invention is to provide an indicia device in which the indicia may be readily changed.

An object of an eighth broad aspect of the present invention is to provide an indicia device which can be readily attached with alteration to a barrier device, e.g., a turnstile and with conventional tools.

An object of a ninth broad aspect of the present invention is to provide an indicia device which can be constructed of conventional materials using conventional techniques.

An object of a tenth broad aspect of the present invention is to provide an indicia device which can be constructed in a variety of configurations to meet the criteria of an individual user.

By one broad aspect of this invention, a device is provided for displaying indicia on a barrier device having an arm with a free end, the device comprising a tubular sleeve containing indicia and receivable about the arm, the tubular sleeve including an arm-receiving end and an opposing free end, and coupling means for coupling the sleeve to the arm.

By a second broad aspect of this invention, a device is provided for displaying indicia on a barrier device having an arm with a free end, the device comprising a tubular sleeve containing indicia and receivable about the arm, the tubular sleeve including an arm-receiving end and an opposing free end, and coupling means for coupling the sleeve to the arm, the coupling means including a collar which is configured adjustably and securely to engage the arm, and an attachment member for attaching the arm-receiving end of the tubular sleeve to the collar.

By one variant of these first two broad aspects of this invention, the barrier device comprising a turnstile.

By a third broad aspect of this invention, an indicia device is provided for displaying indicia on a turnstile having an arm with a free end, the indicia device comprising a tubular sleeve having indicia and receivable about the arm, the tubular sleeve including a first end and a second end opposing the first end, a first collar which is configured adjustably and securely to couple to the arm, and adjustably and securely to engage the first end of the tubular sleeve, and a second collar which is configured

adjustably and securely to couple to the arm, and adjustably and securely to engage the second end of the tubular sleeve.

By a first variant of this third broad aspect of the invention, the tubular sleeve is transparent, and the indicia is carried on a sheet which is inserted into the tubular sleeve.

By a second variant of this third broad aspect of the invention and/or the above variant thereof, the collar includes an arm-securing portion for coupling the collar to the arm, a sleeve-securing portion for securing the tubular sleeve to the collar, and a bore extending through both the arm-securing portion and the sleeve-securing portion for receiving the arm.

By a first variation of this variant, the arm-securing portion is secured to the arm by set screws extending through the arm-securing portion into the bore. By a second variation of this variant, the sleeve-securing portion includes an inner portion which is receivable within the arm-receiving end of the tubular sleeve, and an outer portion which is engageable with the arm-receiving end of the tubular sleeve.

By a third variant of this third broad aspect of the invention, and/or the above variants and/or variations thereof, the attachment member is a screw extending through the tubular sleeve proximate the arm-securing end into the inner portion.

By a fourth variant of this third broad aspect of the invention, and/or the above variants and/or variations thereof, the collar further includes seal means for sealing the collar to the tubular sleeve

By a fifth variant of this third broad aspect of the invention, and/or the above variants and/or variations thereof, the indicia device further includes an end cap closing the free end of the tubular sleeve, a spacer extending centrally from the end cap into the free end of the tubular sleeve, and a bore which is formed in the spacer for receiving the free end of the arm.

By a first variation thereof, the spacer is coupled to the arm by a set screw extending through the spacer to engage the arm.

By a fourth broad aspect of this invention, an indicia device is provided for displaying indicia on a turnstile, the indicia device comprising an arm having an end which is adapted to be couplable to the turnstile, and an opposing end, a tubular sleeve

having indicia, the tubular sleeve being receivable about the arm and including a first end and a second end opposing the first end, a first collar which is configured to couple to the arm securely, and securely to engage the first end of the tubular sleeve, and a second collar which is configured adjustably and securely to couple to the arm, and adjustably and securely to engage the second end of the tubular sleeve.

By a first variant of the third and/or fourth aspects of this invention, the first collar includes an arm-securing portion for coupling the first collar to the arm, a sleeve-securing portion for securing the first end of the tubular sleeve to the first collar, and a bore extending through both the arm-securing portion and the sleeve-securing portion for receiving the arm.

By a second variant of the third and/or fourth aspects of this invention, and/or the above variant thereof, the first collar is fixedly attached to the arm-proximate end and includes a shoulder abutting the first end of the tubular sleeve.

By a third variant of the third and/or fourth aspects of this invention and/or the above variants thereof, the second collar includes a shoulder abutting the second end of the tubular sleeve, the second collar being adjustably movable toward the first collar securely to press the tubular sleeve therebetween.

By a fourth variant of the third and/or fourth aspects of this invention, and/or the above variants, the second collar includes an arm-securing portion for coupling the second collar to the arm, a sleeve-securing portion for securing the second end of the tubular sleeve to the collar, and a bore extending both through both the arm-securing portion and the sleeve-securing portion for receiving the arm. By a first variation thereof, the sleeve-securing portion is adjustable toward the first collar to compress the tubular sleeve between the first collar and the second collar.

By a fifth variant of the third and/or fourth aspects of this invention, and/or the above variants, the sleeve-securing portion includes an outer, generally-cylindrical surface having a diameter which is adjustably expandable and contractible, and means for expanding and contracting the diameter of that outer, generally-cylindrical surface.

By a first variation thereof, the means for expanding and contracting the diameter of the outer surface includes a split which is formed in the sleeve-securing portion and

a wedge for widening and narrowing the split. By a second variation thereof, the wedge comprises projections which are adjustably extendible through the sleeve-securing portion to engage the arm-securing portion.

By a sixth variant of the third and/or fourth aspects of this invention, and/or the above variants, the tubular sleeve is transparent, and the indicia is carried on a sheet which is inserted into the tubular sleeve.

By a seventh variant of the third and/or fourth aspects of this invention, and/or the above variants, the indicia device further includes threading on the opposing end of the arm and threading within the bore of the second collar for engaging the threading on the opposing end.

By a fifth aspect of this invention, a barrier device is provided for carrying indicia, the barrier device comprising a housing, an arm having a free end, which is rotatably carried by the housing, a tubular sleeve containing indicia covering the arm, the tubular sleeve including an arm-receiving end and an opposing free end, and coupling means for coupling the sleeve to the arm.

By one variant of this fifth aspect of this invention, the tubular sleeve is transparent, and the indicia is carried on a sheet which is inserted into the tubular sleeve.

By a sixth aspect of this invention, a turnstile is provided comprising a housing, an arm which is rotatably carried by the housing, the arm having an arm-proximal end which is operable with, and is carried within, the housing, and an arm-distal end extending into a passageway which is adjacent to the housing for blocking passage of a person therethrough, a cover which is slidably disposed on the arm-distal end and which is separated from the arm-proximal end for positioning within the passageway, and indicia which is carried by the cover, the indicia being positioned for viewing by the person moving through the passageway.

By a seventh aspect of this invention, a turnstile is provided for carrying indicia, the turnstile comprising a housing, an arm which is rotatably carried by the housing, the arm having an arm-proximal end which is operable with, and is carried within, the housing, and an arm-distal end extending into a passageway which is adjacent to the housing, a tubular sleeve which is carried by the arm-distal end and which is separated

from the arm-proximal end for positioning within the passageway, the tubular sleeve having a bore receiving the arm therein, and indicia which are carried by the sleeve, the indicia being positioned for viewing by persons moving through the passageway.

By an eighth aspect of this invention, a turnstile is provided comprising a housing, a plurality of turnstile arms, each of the plurality of arms being rotatably carried by the housing for sequentially extending one of the plurality of turnstile arms into a passageway which is adjacent to the housing for blocking passage of a person moving therethrough, each of the plurality of arms having an arm-proximal end which is operable with, and carried within, the housing, and each such arm having an arm-distal end for extending into the passageway adjacent to the housing for blocking passage of a person therethrough, a cover which is slidably-disposed on the arm-distal end and which is separated from the arm-proximal end for positioning within the passageway on the arm-distal end, the cover being separated from the arm-proximal end for positioning within the passageway, and indicia which are carried by each cover, the indicia being positioned on a respective arm-distal end for viewing by the person moving through the passageway as one of the plurality of turnstile arms extends into the passageway.

By a first variant of these sixth, seventh and eighth aspects of this invention, the turnstile further includes a sheet having the indicia thereon, the sheet being inserted within the cover for viewing the indicia therethrough.

By a second variant of these sixth, seventh and eighth aspects of this invention, the turnstile further includes a transparent portion for viewing the indicia thereon, the sheet being inserted within the cover for viewing the indicia therethrough.

By a third variant of these sixth, seventh and eighth aspects of this invention, the turnstile further includes a transparent tubular sleeve.

By a fourth variant of these sixth, seventh and eighth aspects of this invention, the turnstile cover comprises a transparent tubular sleeve.

By a fifth variant of these sixth, seventh and eighth aspects of this invention, and/or the above variants thereof, the turnstile further includes coupling means for coupling the cover to the arm.

By a sixth variant of these sixth, seventh and eighth aspects of this invention, and/or the above variants thereof, the turnstile further includes coupling means which are carried by each turnstile arm, the coupling means including a collar which is configured adjustably and securely to engage the arm.

By a first variation of that variant, the coupling means comprises a collar which is configured adjustably and securely to engage the arm, and an attachment member for attaching the covering to the collar.

By a second variation of that variant, the coupling means comprises a compression ring which is configured adjustably to engage the arm, a collar for receiving the tubular sleeve, and biasing means which are carried by the collar, the biasing means being engageable with the compression ring for moving the ring from a first position, wherein the arm is loosely received by the ring, to a second position, wherein the ring is removably secured to the arm, thus securing the sleeve to the arm.

By a third variation of that variant, the biasing means comprises the collar having threaded holes which are spaced about the periphery of the collar, and set screws which are adjustable within the threaded holes for extending from the collar to the ring for biasing against the ring and thus placing the ring into frictional contact with the arm.

By a fourth variation of that variant, the collar includes an arm-securing portion for coupling the collar to the arm, a cover-securing portion for securing the cover to the collar, and a bore extending through both the arm-securing portion and the cover-securing portion for receiving the arm.

By a seventh variant of these sixth, seventh and eighth aspects of this invention, and/or the above variants thereof, the turnstile further includes an end cap closing the free end of the tubular sleeve, a spacer extending centrally from the end cap into the free end of the tubular sleeve, and a bore which is formed in the spacer for receiving the free end of the arm.

By a ninth aspect of this invention, a turnstile indicia device is provided which is useful with a turnstile arm having an arm proximal end which is operable with, and is carried within, a turnstile housing, and an arm distal end extending into a passageway for blocking passage of a person moving therethrough, the device comprising a cover for

attaching to the turnstile arm-distal end and which is separated from the arm proximal end, the arm-distal end thereby extending the cover into the passageway, indicia carried by the cover, the indicia being positioned for viewing by the person moving through the passageway, and coupling means for attaching the cover to the turnstile arm, the coupling means including a collar which is configured adjustably and securely to engage the turnstile arm, the collar having an arm-securing portion for coupling the collar to the arm and a cover-securing portion for securing the cover to the collar.

By one variant of this ninth aspect of this invention, the turnstile device further includes a sheet having the indicia thereon, the sheet being inserted within the cover for viewing the indicia therethrough.

By a second variant of this ninth aspect of this invention, the cover includes a transparent portion for viewing the indicia therethrough.

By a third variant of this ninth aspect of this invention, the cover comprises a transparent tubular sleeve.

By a tenth aspect of this invention, a method is provided for displaying indicia on a barrier device having an arm with a free end, the method comprising the steps of providing a collar which is configured adjustably and securely to engage the arm, providing a tubular sleeve containing indicia and receivable about the arm, the tubular sleeve including an arm-receiving end and an opposing free end, securing the collar onto the arm, covering the arm with the tubular sleeve, and securing the arm-receiving end of the tubular sleeve to the collar.

By a tenth aspect of this invention, a method is provided for displaying indicia on a turnstile having an arm with a free end, the method comprising the steps of providing a collar which is configured adjustably and securely to engage the arm, providing a tubular sleeve containing indicia and receivable about the arm, the tubular sleeve including an arm-receiving end and an opposing free end, securing the collar onto the arm, and covering the arm with the tubular sleeve, and securing the arm-receiving end of the tubular sleeve to the collar.

By one variant of this tenth aspect of the invention, the method further includes the step of supporting the free end of the tubular sleeve with a spacer having a bore, and

carrying the spacer within the free end of the tubular sleeve for receiving the free end of the arm.

By a second variant of this tenth aspect of the invention, the step of covering the arm includes inserting a sheet containing indicia into the tubular sleeve.

Briefly, in accordance with a preferred embodiment of a broad aspect of the present invention an indicia device is provided for displaying indicia on a barrier device, e.g., a turnstile having an arm with a free end. The indicia device includes a tubular sleeve containing indicia which is receivable about the arm. The tubular sleeve includes an arm-receiving end and an opposing free end. The indicia device also includes coupling means for coupling the sleeve to the arm.

The coupling means includes a collar which is configured adjustably and securely to engage the arm, and an attachment member for attaching the arm-receiving end of the tubular sleeve to the collar. The collar includes an arm-securing portion for securing the tubular sleeve to the collar and a bore extending through the arm-securing portion and the sleeve-securing portion for receiving the arm.

Also provided is seal means for sealing the collar to the tubular sleeve, an end cap closing the free end of the tubular sleeve, a spacer extending centrally from the end cap into the free end of the tubular sleeve and a bore which is formed in the spacer for receiving the free end of the arm.

The tubular sleeve is transparent, and the indicia is carried on a sheet which is inserted into the tubular sleeve.

(e) DESCRIPTION OF THE FIGURES

In the accompanying drawings,

Fig. 1 is a perspective view illustrating a turnstile device;

Fig. 2 is a perspective view illustrating an indicia device constructed in accordance with the teachings of an embodiment of an aspect of the present invention as it would appear installed on the turnstile device of Fig. 1;

Fig. 3 is an isometric view of the indicia device of Fig. 2;

Fig. 4 is an exploded view of the indicia device of Figs. 2 and 3;

Fig. 5 is an isometric view of an alternate embodiment of an indicia device; and

Fig. 6 is an exploded view of the indicia device of Fig. 5.

(f) AT LEAST ONE MODE FOR CARRYING OUT THE INVENTION

Turning now to the drawings in which like reference characters indicate corresponding elements throughout the several views, attention is first directed to Fig. 1 which illustrates a turnstile device generally designated 10 consisting of a housing 12 opposed by an obstruction 13. Housing 12 and obstruction 13 define a passageway therebetween, alternately blocked by one of three arms 14, each arm 14 having a free end 15. Arms 14 extend from a plate 17 which is rotatably mounted on housing 12 such that only one of the three arms 14 extends across the passageway at any given time. As an individual moves through the passageway, the arm blocking the passageway is rotated out of the way allowing an individual to pass through. As the arm is moved, another arm rotates up behind the individual, to be in the blocking position, again blocking the passageway.

Set forth for purposes of orientation and reference in connection with the ensuing detailed description of an embodiment of an aspect of the instant invention, the foregoing brief description of turnstile 10 is intended to be generally-representative of typical, commercially-available turnstiles. Details which are not specifically illustrated and described will be readily understood and appreciated by those skilled in the art.

With reference to Fig. 2, turnstile 10 is illustrated with a plurality of indicia devices, generally designated 20, which are installed on arms 14. Indicia device 20 encloses arm 14, and contains visual information or indicia 22. Indicia 22 is preferably positioned so as to be in proper orientation for viewing when arm 14 is in the blocking position. Identical or diverse indicia may be carried by individual indicia devices 20. If diverse indicia are employed between separate indicia device 20, each diverse indicia would be viewed as the appropriate arm rotates to the blocking position.

Still referring to Fig. 2, three separate indicia devices 20 are shown installed on three separate arms 14. One skilled in the art will understand that each arm need not be covered. Furthermore, a turnstile device may have more than three or less than three

arms. One skilled in the art will understand that substantially any turnstile device having arms may be improved by the installation of one or more indicia devices 20.

Indicia device 20 is a generally-tubular sleeve which is configured to fit over, and enclose, arm 14, as can be seen in Fig. 3. Indicia device 20 consists of a tubular sleeve 23 having an arm-receiving end 24 and a free end 25. Arm-receiving end 24 is closed by a collar 27 which is configured to receive arm 14 therethrough, and free end 25 is closed by an end cap 28. With additional reference to Fig. 4, collar 27 includes a sleeve-securing portion having an outer portion 29 which includes a sleeve-securing portion having an outer portion 29 and an inner portion 30, and an arm-securing portion 32. Outer portion 30 is substantially-equivalent to the diameter of an inner surface 34 of tubular sleeve 23, and is received in tubular sleeve 23 at arm-receiving end 24. A groove 35 is circumscribed around the periphery of intermediate member 30 and contains a seal ring 37 which engages inner surface 34, thereby sealing tubular sleeve 23. This is to prevent moisture or other detrimental materials from entering tubular sleeve 23 and damaging indicia 22. Arm-securing portion 32 extends into arm-receiving end 24 and has a diameter which is less than the diameter of inner surface 34 and therefore is spaced from inner surface 34. A bore 38 is formed centrally through collar 27, extending through outer portion 29, inner portion 30, and arm-securing portion 32. Bore 38 has a diameter which is sufficient to receive arm 14 therethrough. Set screws 39 extend through arm-securing portion 32, into bore 38 and engage arm 14, securely fixing collar 27 to arm 14. In this embodiment of an aspect of the present invention, two set screws are employed, which are separated by approximately 90 degrees. Threaded holes 40 are formed around the outer edge of inner portion 30, and align with corresponding holes 42 which are formed through tubular sleeve 23 proximate to arm-receiving end 24. Screws (not shown) extend through holes 42 and thread into threaded holes 40, thereby securely holding tubular sleeve 23 onto collar 27, and thereby, onto arm 14.

Still referring to Fig. 4, end cap 28 has a diameter which is substantially equivalent to outer surface 33 of tubular sleeve 23 and is fixed to free end 25. In this embodiment of an aspect of the present invention, end cap 28 is bonded to free end 25 using an adhesive, but substantially any method may be employed securely to attach end

cap 28 to free end 25. A spacer 43 is coupled centrally to the inside of end cap 28 and is configured to extend into tubular sleeve 23 at free end 25. Spacer 43 is coupled to end cap 28 by attachment members, e.g., screws 44, extending through end cap 28 into spacer 43. One skilled in the art will appreciate that an adhesive or other attachment means may be used to fix spacer 43 to end cap 28. Spacer 43 is positioned centrally within tubular sleeve 23 at free end 25, and has a diameter which is less than the diameter of inner surface 34, thereby creating a space between spacer 43 and inner surface 34. A sheet 45 of material carrying indicia 22 is rolled into a tube with indicia 22 visible on the outer surface thereof, and is inserted into tubular sleeve 23. When properly positioned, sheet 45 preferably extends from collar 27 to end cap 28, with its outer surface pressing against inner surface 34. It will be understood that a shorter sheet may be inserted which would not extend from collar 27 to end cap 28. However this is not preferred since this would permit viewing of the interior of tubular sleeve 23.

Tubular sleeve 23 is preferably constructed of a transparent material, through which indicia 22 is visible. Substantially any clear material may be employed for tubular sleeve 23; however, it must be strong enough to withstand repeated contact by individuals passing through the passageway. The preferred material for tubular sleeve 23 is a cast acrylic, an extruded acrylic or an extruded polycarbonate. One skilled in the art will understand that, while a transparent tubular sleeve 23 containing a sheet 45 is preferred, a tubular sleeve may be employed having indicia directly thereon. Collar 27, and spacer 43, may be constructed of substantially any material, e.g., metal or plastic, but the specifically-preferred materials are nylon, polyvinyl chloride, or DELRIN$_{TM}$. End cap 28 may be made of the same materials, but for purely aesthetic reasons polycarbonate is preferred, since it can be produced in a variety of colour options.

Indicia device 20 is easily installed on arm 14 of turnstile 10 without altering the turnstile and without using specialized tools, by first sliding collar 27 onto arm 14 such that arm extends through bore 38. Set screws 39 are tightened, engaging arm 14 and securing collar 27 thereto. Sheet 45 may be formed of substantially any material which can be rolled, and onto which indicia can be placed, e.g., paper, synthetic plastics materials, photographic paper, metal foils, etc. Tubular sleeve 23 containing sheet 45

is received about arm 14 and is coupled to collar 27 by inserting screws (not shown) through holes 42 into threaded holes 40. Due to the length of tubular sleeve 23, in order to insure spacing of free end 25 from arm 14, and to stabilize it for contact with individuals passing through the passageway, spacer 43 includes a bore 47 extending therethrough which receives free end 15 of arm 14, thereby positioning and securing free end 25. In this manner, indicia 22 is visible through, and is protected by, tubular sleeve 23. Furthermore, sheet 45 may be easily changed by removing tubular sleeve 23 from collar 27 and replacing sheet 45.

Reference is now made to Figs. 5 and 6 which illustrate an alternate embodiment of an indicia device incorporating the teachings of an embodiment of an aspect of the present invention and generally designated by the reference character 50. Indicia device 50 is generally similar to previously-described embodiment 20 of an aspect of the present invention and is similarly configured to fit over, and enclose, arm 14 to display indicia 51. Indicia device 50 consists of a tubular sleeve 52 having an arm-receiving end 53 and a free end 54. Arm-receiving end 53 is closed by a collar 55 which is configured to receive arm 14 therethrough, and free end 54 is closed by an end cap 57. With additional reference to Fig. 6, collar 55 includes an arm-securing portion 58 and a sleeve-securing portion having an outer portion 59, and an inner portion 60. Inner portion 60 has a diameter which is substantially-equivalent to the diameter of an inner surface 62 of tubular sleeve 52, and is received in tubular sleeve 52 at arm-receiving end 53. Outer portion 59 has a diameter which is substantially-equivalent to the diameter of an outer surface 63 of tubular sleeve 52 and engages arm-receiving end 53. A groove 64 is circumscribed around the periphery of inner portion 60 and contains a seal ring 65 which engages inner surface 62 thereby sealing tubular sleeve 52. As with the previous embodiment of an aspect of the present invention, this is to prevent moisture or other detrimental materials from entering tubular sleeve 52 and damaging indicia 51. Arm-securing portion 58 has a diameter which is less than the diameter of inner surface 62 and extends outwardly from outer member 59, away from tubular sleeve 52. A bore 67 is formed centrally through collar 55, extending through arm-securing portion 58, outer portion 59, and inner portion 60. Bore 67 has a diameter which is sufficient to receive

arm 14 therethrough. Set screws 68 extend through arm-securing portion 58, into bore 67 and engage arm 14, thereby securely fixing collar 55 to arm 14. In this embodiment of an aspect of the present invention, two set screws are employed, which are separated from one another by 90 degrees. Threaded holes 69 are formed around the outer edge of inner portion 60 and align with corresponding holes 70 which are formed through tubular sleeve 52 at arm-receiving end 53. Screws (not shown) extend through holes 70 and thread into threaded holes 69, thereby securely holding tubular sleeve 52 onto collar 55 and, thereby, onto arm 14.

Still referred to Fig. 6, end cap 57 includes an inner portion 72 having a diameter which is substantially-equivalent to the diameter of inner surface 62, and an outer portion 73 having a diameter which is substantially equivalent to the diameter of outer surface 63. A spacer 74 may be formed integrally with, or secured to, inner portion 72 and is positioned centrally within tubular sleeve 52 at free end 54. Spacer 74 has a diameter which is less than the diameter of inner surface 62, thereby creating a space between spacer 74 and inner surface 62. A bore 75 extends through spacer 74 terminating at end cap 57. Bore 75 has a diameter which is sufficient to receive free end 15 of arm 14 therein. Set screws 77 extend through spacer 74 into bore 75 and engage arm 14, thereby securely fixing spacer 74 to arm 14. In this embodiment of an aspect of the present invention, inner portion 72 of end cap 57 is received within free end 54 and has a groove 78 circumscribed about its periphery. Groove 78 contains a seal ring 79 which engages inner surface 62 thereby sealing tubular sleeve 52. As with the previous embodiment of an aspect of the present invention, a sheet 80 of material carrying indicia 51 is rolled into a tube with the indicia visible on the outer surface thereof, and is inserted into tubular sleeve 52. When properly positioned, sheet 80 preferably extends from collar 55 to end cap 57, with its outer surface pressing against inner surface 62. It will be understood that a shorter sheet may be inserted which would not extend from collar 55 to end cap 57. However, this is not preferred since this would permit viewing of the interior of the interior of tubular sleeve 52.

Indicia device 50 is easily installed on arm 14 of turnstile 10 and without using specialized tools, by first sliding collar 55 onto arm 14 extends through bore 67. Sheet

80 of material containing indicia 51 is rolled and inserted into tubular sleeve 52 in the proper orientation. Sheet 80 may be formed of substantially any material which can be rolled, and onto which indicia can be placed, e.g., paper, synthetic plastics material, photographic paper, metal foils, etc. Tubular sleeve 52 containing sheet 80 is received about arm 14 and is coupled to collar 55 by inserting screws (not shown) through holes 70 into threaded holes 69. Spacer 74 and end cap 57 are then positioned with free end 15 of arm 14 received within spacer 74. Set screws 77 are tightened, engaging free end 15 and securing end cap 57 to arm 14. Tubular sleeve 52 is moved outwardly, towards end cap 57 until outer portion 58 engages free end 54 of tubular sleeve 52. Collar 55 is moved outward toward end cap 57, until outer portion 59 engages arm-receiving end 53 of tubular sleeve 52. Set screws 68 are tightened, engaging arm 14 and securing collar 55 thereto. In this manner, tubular sleeve 52 is securely retained between collar 55 and end cap 57 and indicia 51 is visible through and protected by tubular sleeve 52. Furthermore, sheet 80 may be easily changed.

The present invention in its various aspects is capable of being exploited on substantially any barrier device having an arm with a free end, e.g., a turnstile apparatus. The present invention in its various aspects is particularly appropriate for use on turnstile apparatus which is used in public areas.

CLAIMS

1. An indicia device for displaying indicia on a barrier device having an arm with a free end, said indicia device comprising:

a tubular sleeve containing indicia and receivable about said arm, said tubular sleeve including an arm-receiving end and an opposing free end; and

coupling means for coupling said sleeve to said arm.

2. An indicia device for displaying indicia on a barrier device having an arm with a free end, said indicia device comprising:

a tubular sleeve containing indicia and receivable about said arm, said tubular sleeve including an arm-receiving end and an opposing free end; and

coupling means for coupling said sleeve to said arm, said coupling means including a collar which is configured adjustably and securely to engage said arm, and an attachment member for attaching said arm-receiving end of said tubular sleeve to said collar.

3. The indicia device as claimed in claim 1 or claim 2 wherein said barrier device comprising a turnstile.

4. An indicia device for displaying indicia on a turnstile having an arm with a free end, said indicia device comprising:

a tubular sleeve having indicia and receivable about said arm, said tubular sleeve including a first end and a second end opposing said first end;

a first collar which is configured adjustably and securely to couple to said arm, and adjustably and securely to engage said first end of said tubular sleeve; and

a second collar which is configured adjustably and securely to couple to said arm, and adjustably and securely to engage said second end of said tubular sleeve.

5. An indicia device as claimed in any one of claims 1 to 4, wherein said tubular sleeve is transparent, and wherein said indicia is carried on a sheet which is inserted into said tubular sleeve.

6. An indicia device as claimed in any one of claims 2 to 5, wherein said first collar includes:

an arm-securing portion for coupling said first collar to said arm;

a sleeve-securing portion for securing said tubular sleeve to said first collar; and

a bore extending through both said arm-securing portion and said sleeve-securing portion for receiving said arm.

7. An indicia device as claimed in claim 6, wherein said arm-securing portion is secured to said arm by set screws extending through said arm-securing portion into said bore.

8. An indicia device as claimed in claim 6 or claim 7, wherein said sleeve-securing portion includes:

an inner portion which is receivable within said arm-receiving end of said tubular sleeve; and

an outer portion which is engageable with said arm-receiving end of said tubular sleeve.

9. An indicia device as claimed in any one of claims 2, 3 and 5 to 8, wherein said attachment member is a screw extending through said tubular sleeve proximate said arm-securing end into said inner portion.

10. An indicia device as claimed in any one of claims 2, 3 and 5 to 9, wherein said first collar further includes seal means for sealing said collar to said tubular sleeve.

11. An indicia device as claimed in claims 1 to 10, further including:

an end cap closing said free end of said tubular sleeve;

a spacer extending centrally from said end cap into said free end of said tubular sleeve; and

a bore which is formed in said spacer for receiving said free end of said arm,

12. An indicia device as claimed in claim 9, wherein said spacer is coupled to said arm by a set screw extending through said spacer to engage said arm.

13. An indicia device for displaying indicia on a turnstile, said indicia device comprising:

an arm having an end which is adapted to be couplable to a said turnstile, and an opposing end;

a tubular sleeve having indicia, said tubular sleeve being receivable about said arm and including a first end and a second end opposing said first end;

a first collar which is configured to couple securely to said arm, and securely to engage said first end of said tubular sleeve; and

a second collar which is configured adjustably and securely to couple to said arm, and adjustably and securely to engage said second end of said tubular sleeve.

14. An indicia device as claimed in claim 4 or claim 13, wherein said first collar includes:

an arm-securing portion for coupling said first collar to said arm;

a sleeve-securing portion for securing said first end of said tubular sleeve to said first collar; and

a bore extending through both said arm-securing portion and said sleeve-securing portion for receiving said arm.

15. An indicia device as claimed in claim 4, claim 13 or claim 14, wherein said first collar is fixedly attached to said arm proximate to said first end and includes a shoulder abutting said first end of said tubular sleeve.

16. An indicia device as claimed in any one of claim 4, or claims 13 to 15, wherein said second collar includes a shoulder abutting said second end of said tubular sleeve, said second collar being adjustably movable toward said first collar securely to press said tubular sleeve therebetween.

17. An indicia device as claimed in any one of claim 4, or claims 13 to 15, wherein said second collar includes:

an arm-securing portion for coupling said second collar to said arm;

a sleeve-securing portion for securing said second end of said tubular sleeve to said collar; and

a bore extending both through said arm-securing portion and said sleeve-securing portion for receiving said arm.

18. An indicia device as claimed in claim 17, wherein said sleeve-securing portion is adjustable toward said first collar to compress said tubular sleeve between said first collar and said second collar.

19. An indicia device as claimed in any one of claims 14 to 18, wherein said sleeve-securing portion includes:

an outer, generally-cylindrical surface having a diameter which is adjustably expandable and contractible; and

means for expanding and contracting said diameter of said outer, generally-cylindrical surface.

20. An indicia device as claimed in claim 19, wherein said means for expanding and contracting said diameter of said outer, generally-cylindrical surface includes a split

which is formed in said sleeve-securing portion and a wedge for widening and narrowing said split.

21. An indicia device as claimed in claim 20, wherein said wedge comprises projections which are adjustably-extendible through said sleeve-securing portion to engage said arm-securing portion.

22. An indicia device as claimed in any one of claims 13 to 21, wherein said tubular sleeve is transparent, and wherein said indicia is carried on a sheet which is inserted into said tubular sleeve.

23. An indicia device as claimed in any one of claim 4, claim 5, or claims 13 to 22, further including threading on said opposing end of said arm and threading within said bore of said second collar for engaging said threading on said opposing end.

24. A barrier device for carrying indicia, said barrier device comprising:

a housing;

an arm having a free end, which is rotatably carried by said housing;

a tubular sleeve containing indicia covering said arm, said tubular sleeve including an arm-receiving end and an opposing free end; and

coupling means for coupling said sleeve to said arm.

25. A barrier device as claimed in claim 24, wherein said tubular sleeve is transparent, and wherein said indicia is carried on a sheet which is inserted into said tubular sleeve.

26. A turnstile comprising:

a housing;

an arm which is rotatably carried by said housing, said arm having an arm-proximal end which is operable with, and is carried within, said housing, and an arm-distal end extending into a passageway which is adjacent said housing for blocking passage of a person therethrough;

a cover which is slidably disposed on said arm-distal end and which is separated from said arm-proximal end for positioning within the passageway; and

indicia which is carried by said cover, said indicia being positioned for viewing by said person moving through the passageway.

27. A turnstile for carrying indicia, said turnstile comprising:

a housing;

an arm which is rotatably carried by said housing, said arm having an arm-proximal end which is operable with, and is carried within, said housing, and an arm-distal end extending into a passageway adjacent to said housing;

a tubular sleeve which is carried by said arm-distal end and which is separated form said arm-proximal end for positioning within said passageway, said tubular sleeve having a bore receiving said arm therein; and

indicia which are carried by said sleeve, said indicia being positioned for viewing by persons moving through said passageway.

28. A turnstile comprising:

a housing;

a plurality of turnstile arms, each of said plurality of arms being rotatably carried by said housing for sequentially extending one of said plurality of turnstile arms into a passageway which is adjacent to said housing for blocking passage of a person moving therethrough, each of said plurality of arms having an arm-proximal end which is operable with, and carried within, said housing, and each of said plurality of arms having an arm-distal end for extending into said passageway adjacent to said housing for blocking passage of a person therethrough;

a cover which is slidably-disposed on said arm-distal end and which is separated from said arm-proximal end for positioning within said passageway on said arm-distal end, said cover being separated from said arm-proximal end for positioning within said passageway; and

indicia which are carried by each cover, wherein said indicia are positioned on a respective arm-distal end for viewing by said person moving through said passageway as one of said plurality of turnstile arms extends into said passageway.

29. The turnstile according to claim 26, claim 27 or claim 28, further comprising a sheet having the indicia thereon, said sheet being inserted within said cover for viewing said indicia therethrough.

30. The turnstile according to claim 26, claim 27 or claim 28, further comprising a transparent portion for viewing said indicia therethrough.

31. The turnstile according to claim 26, claim 27 or claim 28, wherein said cover comprises a transparent tubular sleeve.

32. The turnstile according to claim 26, claim 27 or claim 28, wherein said cover comprises a transparent tubular sleeve including a transparent portion through which said indicia is viewed.

33. The turnstile according to any one of claims 26 to 32, further comprising coupling means for coupling said cover to said arm.

34. The turnstile according to any one of claims 26 to 32, further comprising coupling means which are carried by each turnstile arm, said coupling means including a collar which is configured adjustably and securely to engage said arm.

35. The turnstile according to claim 33 or claim 34, wherein said coupling means comprises:

a collar which is configured adjustably and securely to engage said arm; and

an attachment member for attaching said covering to said collar.

36. The turnstile according to claim 34 or claim 35, wherein said coupling means comprises:

a compression ring which is configured adjustably to engage said arm;

a collar for receiving said tubular sleeve; and

biasing means which are carried by said collar, said biasing means being engageable with said compression ring for moving said ring from a first position, wherein said arm is loosely received by said ring, to a second position, wherein said ring is removably secured to said arm, thus securing the sleeve to said arm.

37. The turnstile according to claim 36, wherein said biasing means comprises said collar having threaded holes which are spaced about the periphery of said collar, and set screws which are adjustable within said threaded holes for extending from said collar to said ring for biasing against said ring and thus placing said ring into frictional contact with said arm.

38. The turnstile according to claim 36 claim 37, wherein said collar includes:

an arm-securing portion for coupling said collar to said arm;

a cover-securing portion for securing said cover to said collar; and

a bore extending through both said arm-securing portion and said cover-securing portion for receiving the arm.

39. A turnstile as claimed in claims 26 to 38, further including:

an end cap closing said free end of said tubular sleeve;

a spacer extending centrally from said end cap into said free end of said tubular sleeve; and

a bore which is formed in said spacer for receiving said free end of said arm.

40. A turnstile indicia device which is useful with a turnstile arm having an arm-proximal end which is operable with, and is carried within, a turnstile housing, and an arm distal end extending into a passageway for blocking passage of a person moving therethrough, said device comprising:

a cover for attaching to said turnstile arm distal end and which is separated from said arm proximal end, said arm distal end thereby extending said cover into the passageway;

indicia carried by said cover, said indicia being positioned for viewing by said person moving through the passageway; and

coupling means for attaching said cover to said turnstile arm, said coupling means including a collar which is configured adjustably and securely to engage said turnstile arm, said collar having an arm-securing portion for coupling said collar to said arm and a cover-securing portion for securing said cover to said collar.

41. The turnstile device according to claim 40, further comprising a sheet having said indicia thereon, said sheet being inserted within said cover for viewing the said indicia therethrough.

42. The turnstile device according to claim 40 or claim 41, wherein said cover includes a transparent portion for viewing the indicia therethrough.

43. The turnstile device according to claim 40 or claim 41, wherein said cover comprises a transparent tubular sleeve.

44. A method of displaying indicia on a barrier device having an arm with a free end, said method comprising the steps of:

providing a collar which is configured adjustably and securely to engage said arm;

providing a tubular sleeve containing indicia and receivable about said arm, said tubular sleeve including an arm-receiving end and an opposing free end;

securing said collar onto said arm;

covering said arm with said tubular sleeve; and

securing said arm-receiving end of said tubular sleeve to said collar.

45. A method of displaying indicia on a turnstile having an arm with a free end, said method comprising the steps of:

providing a collar which is configured adjustably and securely to engage said arm;

providing a tubular sleeve containing indicia and receivable about said arm, said arm, said tubular sleeve including an arm-receiving end and an opposing free end;

securing said collar onto said arm;

covering said arm with said tubular sleeve; and

securing said arm-receiving end of said tubular sleeve to said collar.

46. A method as claimed in claim 44 or claim 45 further including the step of supporting said free end of said tubular sleeve with a spacer having a bore, and carrying said spacer within said free end of said tubular sleeve for receiving said free end of said arm.

47. A method as claimed in any one of claim 44, claim 45 or claim 46, wherein said step of covering said arm includes inserting a sheet containing indicia into said tubular sleeve.

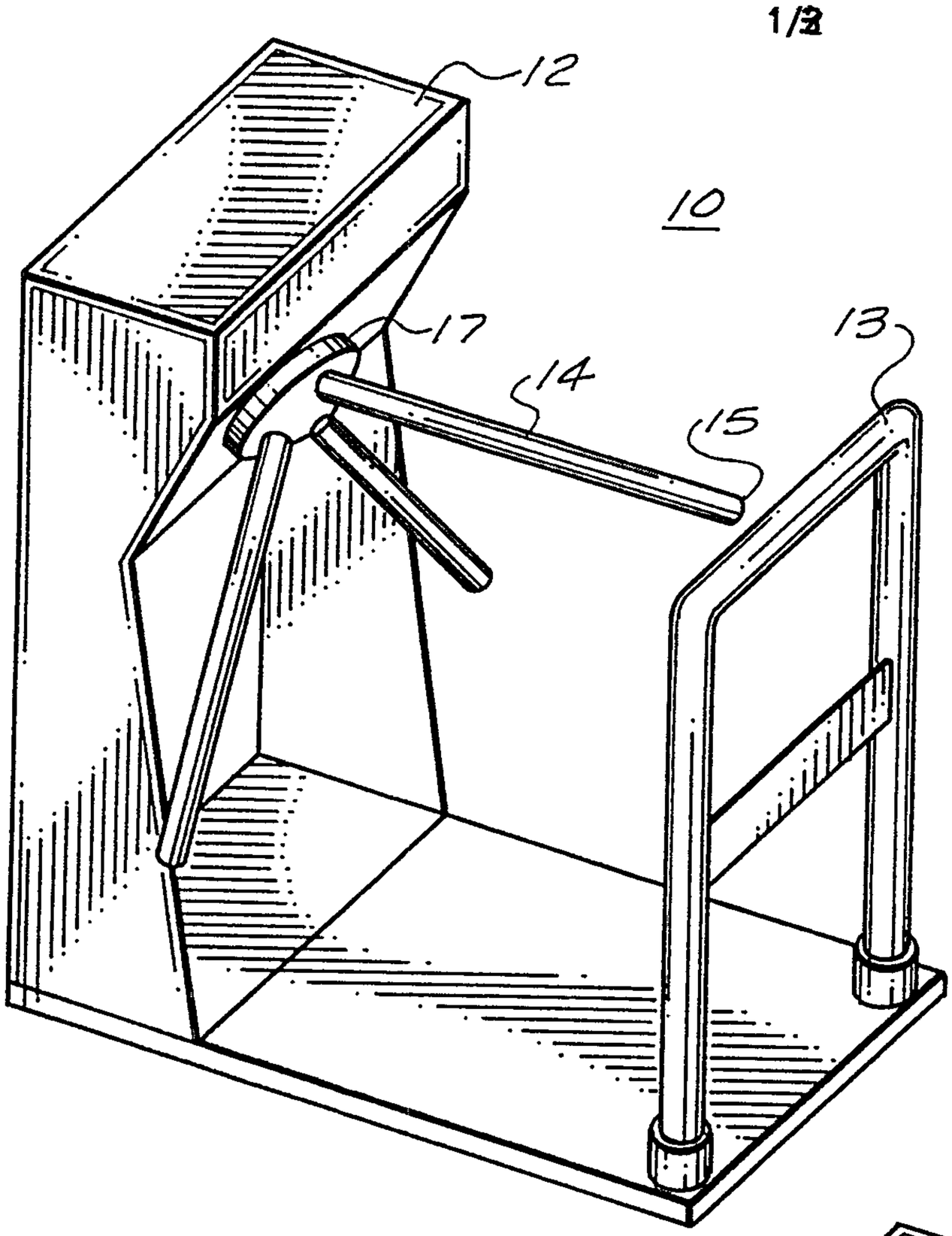

FIG. 1

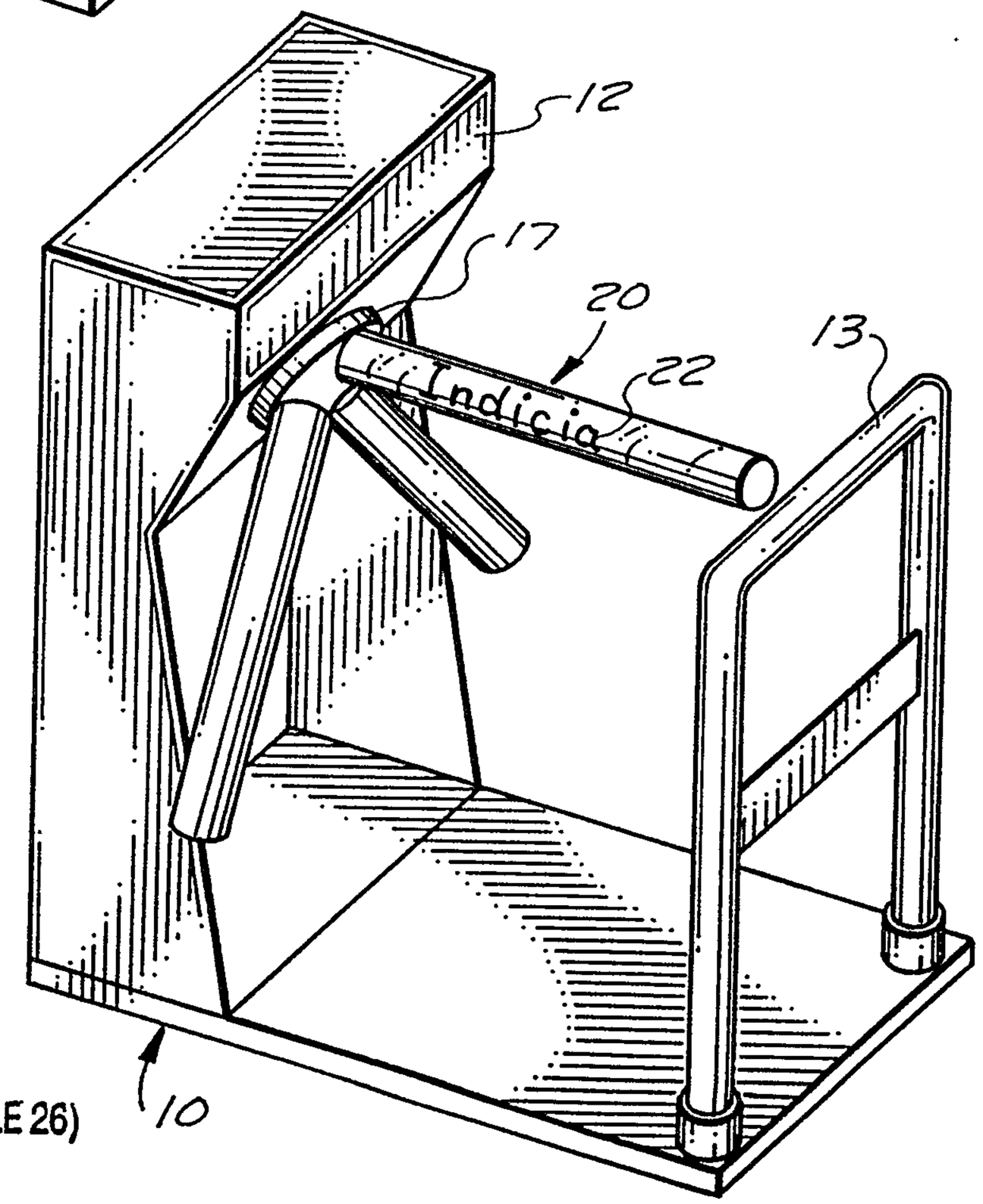

FIG. 2

FIG. 3

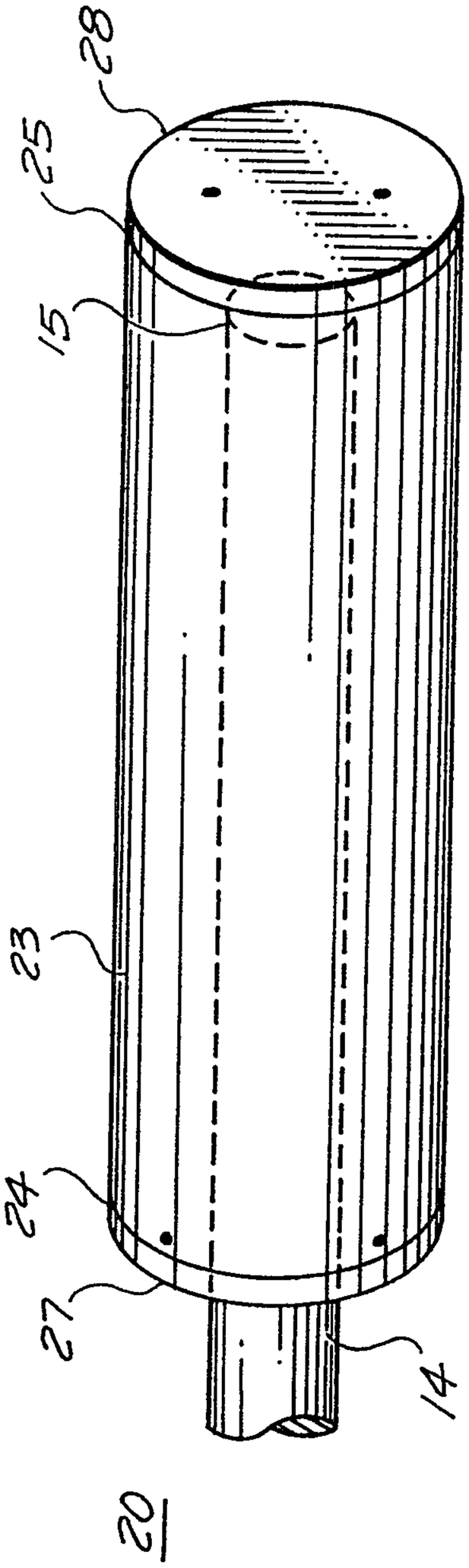
28
25
15
27
24
23
14
20

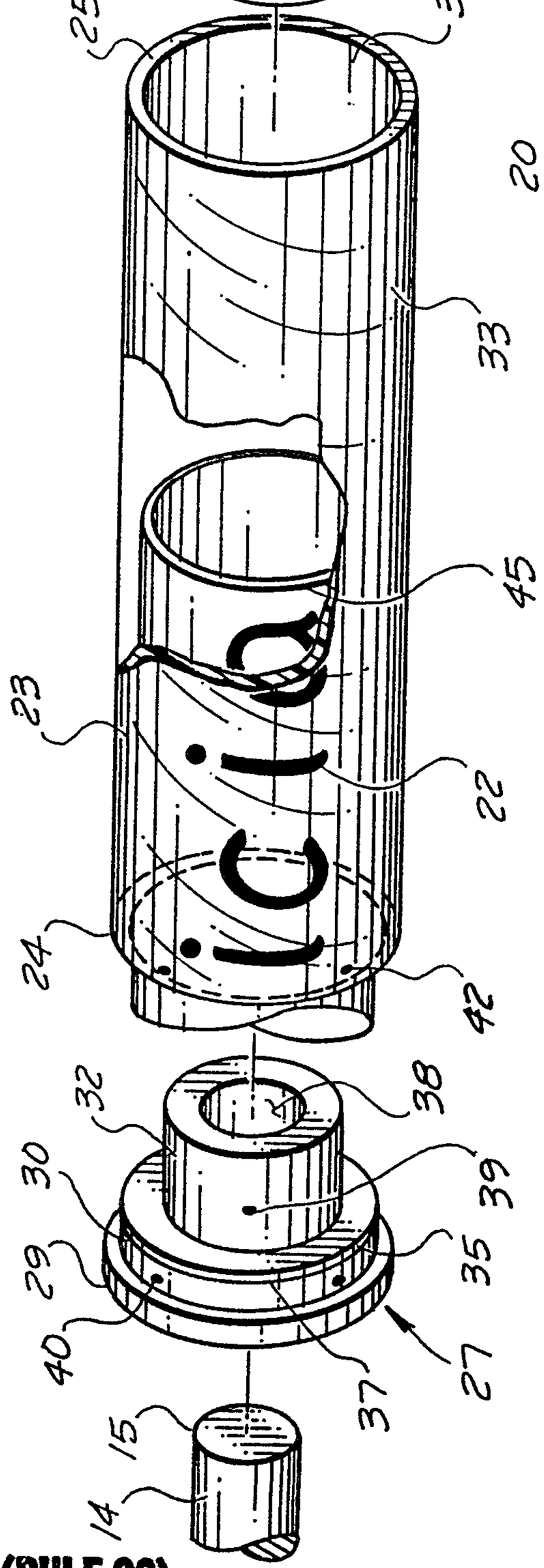
44
28
47
43
25
34
33
20
45
23
22
24
42
32
38
30
39
29
35
40
37
27
15
14

FIG. 4

AMENDED SHEET

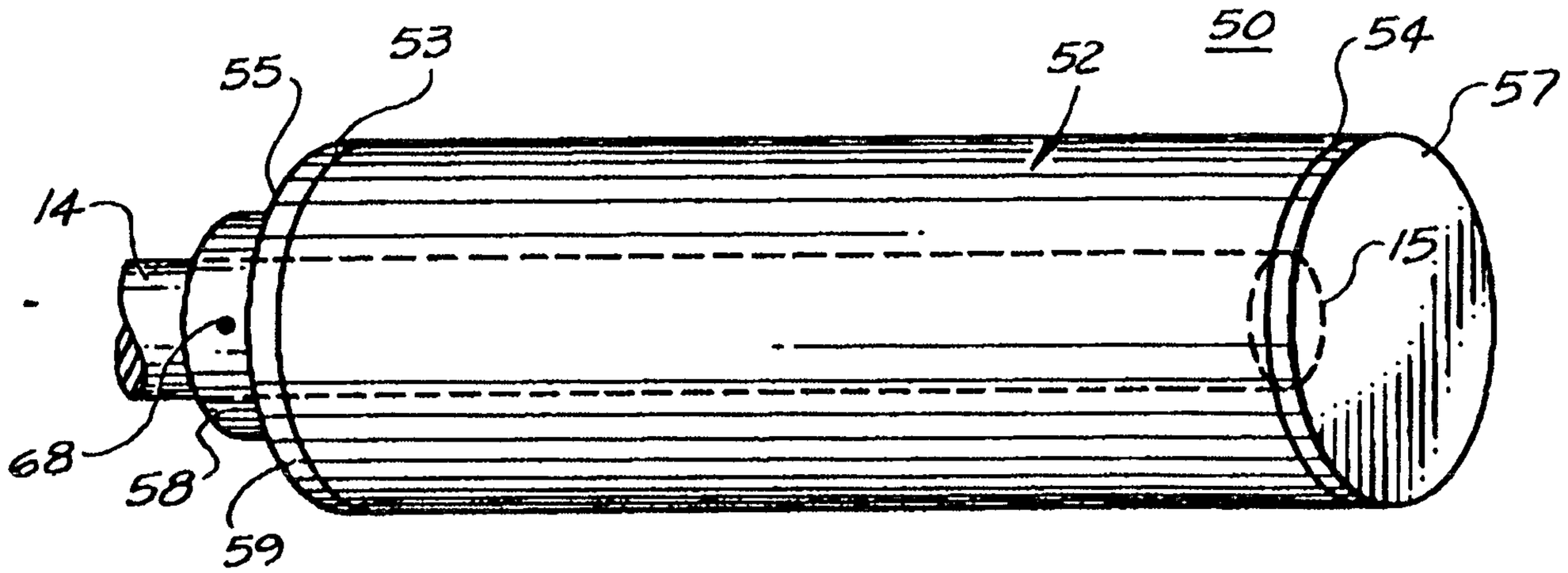

FIG. 5

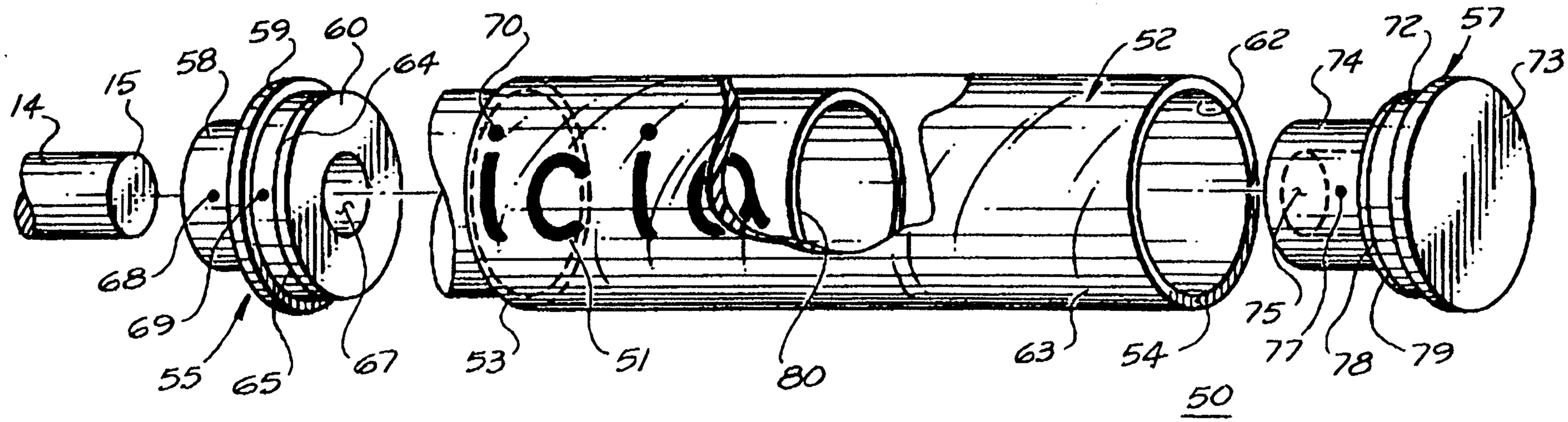

FIG. 6

1174772
3/3

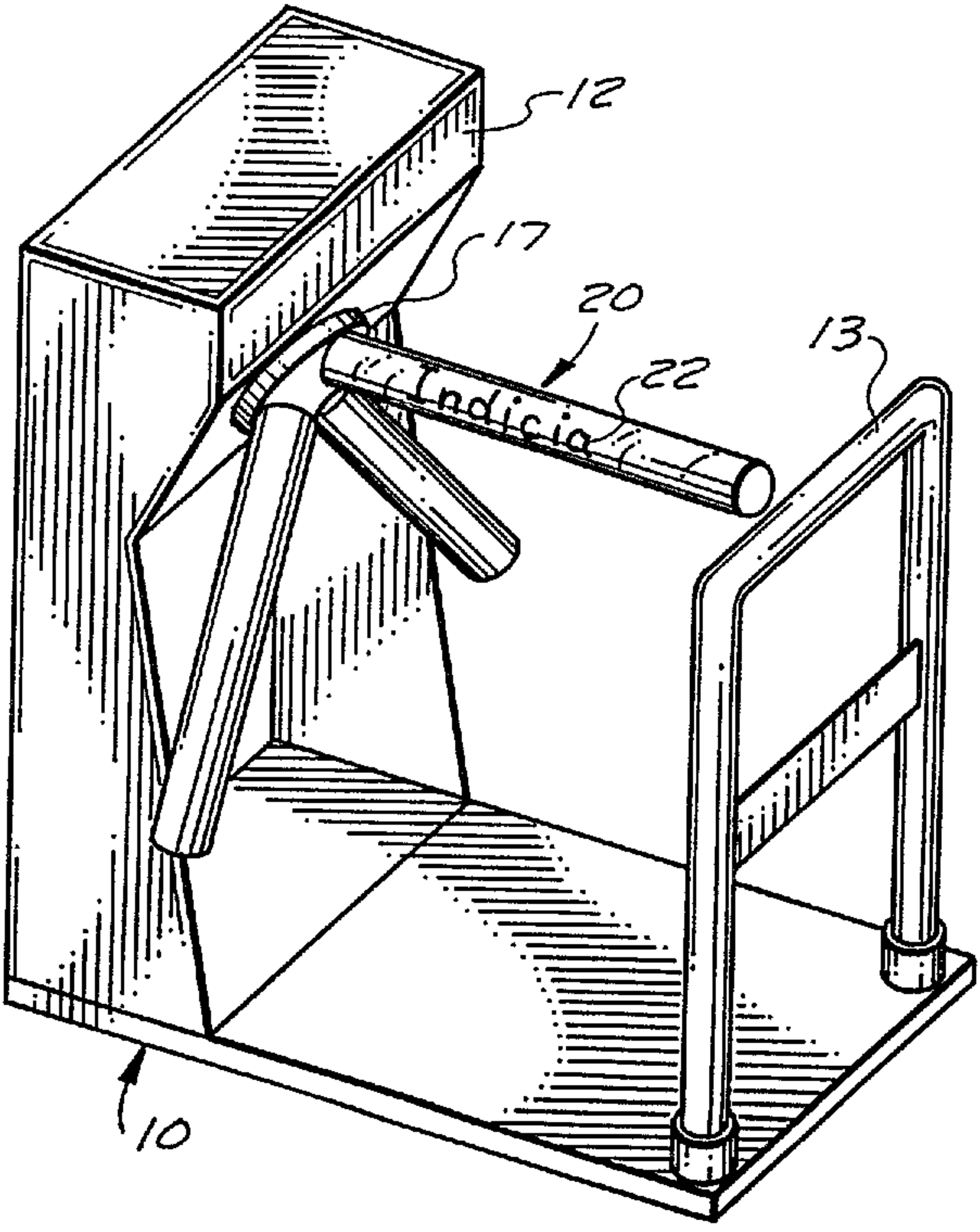
12
17
20
13
22
Indicia
10