United States Patent [19]

Ariyama et al.

[11] **3,811,821**

[45] **May 21, 1974**

[54] **POWDER IMAGE FIXING DEVICE FOR XEROGRAPHIC COPYING APPARATUS AND METHOD**

[75] Inventors: **Kenzo Ariyama; Shigeru Muramatsu; Ryoichi Namiki,** all of Tokyo, Japan

[73] Assignee: **Ricoh Co., Ltd.,** Tokyo, Japan

[22] Filed: **Nov. 28, 1972**

[21] Appl. No.: **310,130**

[30] **Foreign Application Priority Data**

Dec. 3, 1971 Japan 46-98054
Dec. 3, 1971 Japan 46-98055

[52] **U.S. Cl.** **432/8,** 432/60, 432/228
[51] **Int. Cl.** **F27b 9/28**
[58] **Field of Search** 432/59, 60, 227, 228, 8

[56] **References Cited**

UNITED STATES PATENTS

3,449,548	6/1969	Adamek et al.	432/60
3,539,161	11/1970	Byrne	432/228
3,716,221	2/1973	Gorka	432/228

Primary Examiner—John J. Camby
Attorney, Agent, or Firm—Cooper, Dunham, Clark, Griffin & Moran

[57] **ABSTRACT**

A device comprising a heating, and fixing roller and a pressing roller, the heating and fixing roller having a peripheral surface to which powder of a powder image formed on a recording sheet by a xerographic method is hard to adhere and the pressing roller having a peripheral surface to which the powder readily adheres. The recording sheet is passed between the two rollers so that the powder image on the recording sheet may be fixed.

14 Claims, 5 Drawing Figures

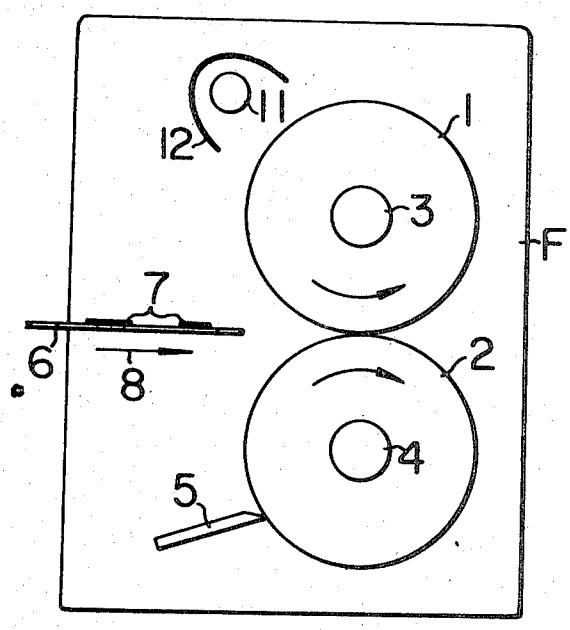

FIG. 1

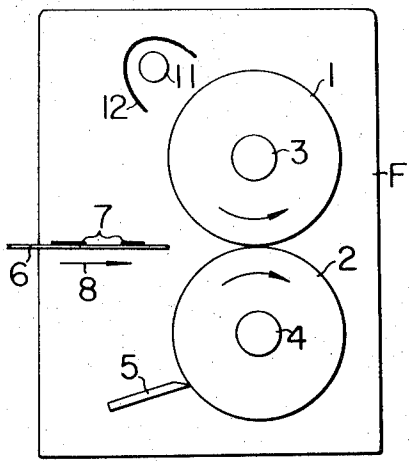

FIG. 2

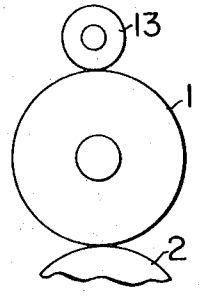

FIG. 4

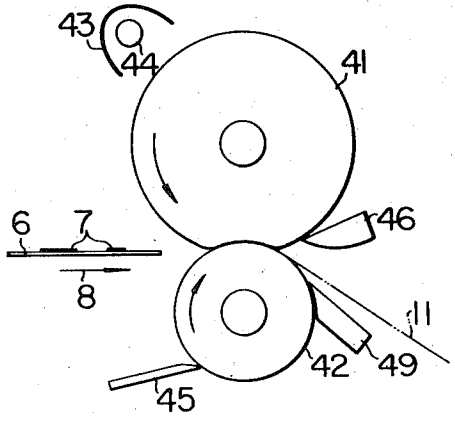

FIG. 3

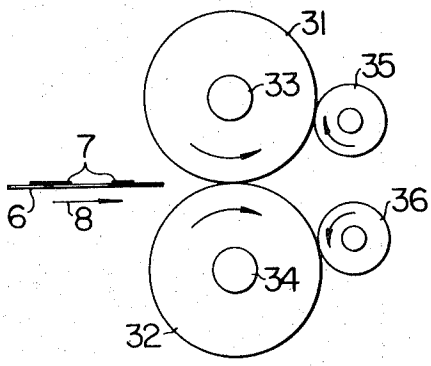

FIG. 5

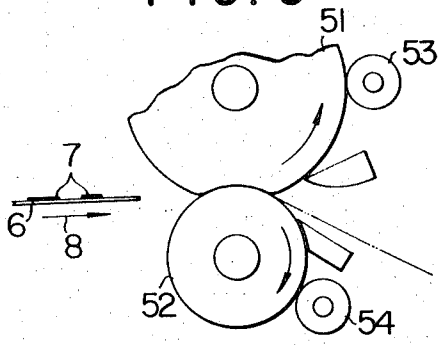

POWDER IMAGE FIXING DEVICE FOR XEROGRAPHIC COPYING APPARATUS AND METHOD

BACKGROUND OF THE INVENTION

In an electrophotographic printing method known in the art as a xerographic method, a positively charged electrostatic latent image is formed on the periphery of a drum coated with selenium, and dark powder generally referred to as a toner which is a fusible material is negatively charged and caused to adhere to the charged regions of the latent image to provide a toner or powder image. After being transferred to a recording sheet, the powder image on the recording sheet is heated and fixed by a heating and fixing method generally consisting in passing the recording sheet between a heated fixing roller and a pressing roller maintained in pressing engagement with the fixing roller so that the powder of the powder image on the recording sheet may be fused and caused to adhere to the sheet.

Some disadvantages are associated with this method. The periphery of the fixing roller which is brought into contact with the powder image tends to soil recording sheets by forming offset thereon from the powder previously adhering to the roller. When the temperature of the fixing roller is not sufficiently high, non-fused powder itself tends to soil the recording sheets by adhering thereto and forming offset thereon; when the temperature of the fixing roller is too high, fused powder tensd to soil the recording sheets by adhering thereto to form offset thereon. It is thus required to select, for the fixing roller, a suitable material to which a toner is hard to adhere and to suitably control the temperature at which fixing is carried out, in order to prevent the forming of offset on recording sheets. However, difficulty is encountered in effecting control of fixing temperature.

Another disadvantage is that recording sheets tend to be wound on the fixing roller. In order to prevent this phenomenon, it is desirable that means be provided for causing the leading end of each recording sheet to move away from the fixing roller, in addition to preventing offset from being formed on each recording sheet by powder adhering to the fixing roller.

SUMMARY OF THE INVENTION

This invention relates to a device for fusing and fixing, by means of at least one heating roller, a powder image on a recording sheet formed by electrographic printing method.

An object of the invention is to provide a powder image fixing device comprising a fixing roller of a material hard to form offset and a pressing roller of a material easy to form offset, the small quantity of powder adhering to the periphery of the fixing roller being caused to be transferred to the pressing roller when no recording sheet is present between the two rollers whereby the periphery of the fixing roller can be maintained free from powder at all times and soiling of recording sheets can be precluded.

Another object of the invention is to provide a powder image fixing device in which the fixing roller brought into direct contact with powder images is made of a material of relatively high resilience to which powder is hard to adhere, the pressing roller has a diameter slightly smaller than that of the fixing roller and is made of a relatively hard material, and a small depression is caused to be formed in a portion of the periphery of the fixing roller which is brought into contact with the pressing roller to facilitate peeling off of each recording sheet of its own accord from the periphery of the fixing roller.

According to the invention, there is provided a powder image fixing device comprising a fixing roller made of a material to which the powder of powder images is hard to adhere and a pressing roller made of a material to which the powder readily adheres, so as to maintain the fixing roller free from powder at all times to preclude soiling of recording sheets.

According to the invention, there is provided a powder image fixing device comprising a fixing roller made of a resilient material to which the powder of powder images is hard to adhere and a pressing roller made of a relatively hard material to which the powder readily adheres, the pressing roller having a diameter smaller than that of the fixing roller and the two rollers being arranged such that a small depression is formed on the periphery of the fixing roller when brought into contact with the periphery of the pressing roller whereby each recording sheet can be readily peeled off from the fixing roller without being wound thereon and adhesion of powder to the periphery of the fixing roller can be precluded.

BRIEF DESCRIPTION OF THE DRAWINGS

The drawings are side views showing in schematic form various embodiments of the present invention.

FIG. 1 is a schematic side view of the powder image fixing device in its most basic form according to the invention;

FIG. 2 is a fragmentary schematic side view of the device using a heater roller for effecting heating of the fixing roller;

FIG. 3 is a schematic side view of the device having a plurality of cleaning rollers for the fixing roller and the pressing roller respectively;

FIG. 4 is a schematic side view of the device in which the fixing roller is made of a resilient material and the pressing roller is made of a relatively hard material; and

FIG. 5 is a schematic side view of the device shown in FIG. 4 to which a plurality of cleaning rollers are provided.

DESCRIPTION OF PREFERRED EMBODIMENTS

A fixing roller 1 rotatably supported by suitable means by a frame F is maintained in contact with a pressing roller 2 which presses against roller 1, rollers 1 and 2 rotating in the direction of respective arrows. Well known rod-shaped heaters 3 and 4 are disposed in rollers 1 and 2 respectively.

Fixing roller 1 is made of silicone rubber or other material to which powder of a developing agent is hard to adhere while pressing roller 2 is made of metal or other material to which the powder readily adheres, the former having a certain degree of resilience and the latter being hard.

A blade 5 has its forward end maintained in contact with the periphery of pressing roller 2 to scrape off impurities adhering thereto. A recording sheet 6 formed thereon with a powder image 7 (toner image) by a well-known xerographic method is moved in the direction of an arrow 8 and passed between two rollers 1 and 2.

Even if fixing roller 1 is made of a material to which the powder is hard to adhere, the powder of powder image 7 on recording sheet 6 may inadvertently adhere to the periphery of the fixing roller. However, since rollers 1 and 2 are brought into contact with each other at their peripheries after recording sheet 6 has passed between them, the toner or powder remaining on the periphery of fixing roller 1 is transferred and adheres to the periphery of pressing roller 2 to which it readily adheres. Thus, pressing roller 2 concurrently serves as a cleaning roller for fixing roller 1 and need to use cleaning means which has hitherto been provided for fixing roller 1 is eliminated. Without the cleaning means, fixing roller 1 can be maintained free from powder on its periphery at all times.

Two rollers 1 and 2 can be heated by providing a heater 11 and a reflector 12 near the periphery of fixing roller 1, or a heater roller 13 can be maintained in engagement with the periphery of the fixing roller as shown in FIG. 2 to heat fixing roller 1 directly and pressing roller 2 indirectly, by eliminating heaters 3 and 4.

FIG. 3 shows another embodiment comprising a fixing roller 31 and a pressing roller 32 maintained in pressing engagement with each other and rotating in the directions of respective arrows, heaters 33 and 34 being built in rollers 31 and 32 respectively. Two rollers 31 and 32 are made of silicone rubber or other resilient material to which powder is hard to adhere, and cleaning rollers 35 and 36 made of aluminum or other hard material to which powder readily adheres are maintained in pressing engagement with rollers 31 and 32 respectively.

When recording sheet 6 is passed between rollers 31 and 32, a quantity of powder remains on the peripheries of rollers 31 and 32 but is soon transferred and adheres to cleaning rollers 35 and 36 to which powder readily adheres. Thus, fixing roller 31 and pressing roller 32 are maintained free from powder at all times and formation of offset on recording sheets by fixing roller 31 can be precluded. Once powder adheres to the peripheries of cleaning rollers 35 and 36, the efficiency of cleaning rollers is increased because the ease with which powder adheres to the cleaning rollers is increased with each increment of powder adhering thereto. The cleaning rollers increase their size with use but they are effective to perform cleaning of fixing roller 31 and pressing roller 32 in spite of increased adhesion of powder thereto.

In FIG. 4, there is shown an embodiment comprising a fixing roller 41 made of a resilient material to which powder of the powder image on a recording sheet is hard to adhere and a pressing roller 42 made of a hard material. Roller 42 has a diameter smaller than that of roller 41, so that the periphery of roller 42 bites into the periphery of roller 41 when they are maintained in pressing engagement with each other while rotating in the directions of respective arrows. The periphery of fixing roller 41 is heated by a heater 44 provided with a reflector 43 or by heater roller 13 shown in FIG. 2. Pressing roller 42 is made of aluminum or other metal to which powder readily adheres, and a blade 45 has its forward end maintained in engagement with the periphery of pressing roller 42 to scrape off impurities from the periphery of pressing roller 42. Recording sheet 6 formed thereon with powder image 7 is fed in the direction of arrow 8 by feed means (not shown) and passed between the two rollers 41 and 42. Pick-off claws 46 and 49 are disposed near the peripheries of rollers 41 and 42 and on the exit side of the path of recording sheet 6 between the two rollers 41 and 42 to pick off a recording sheet which might otherwise stick to the periphery of either roller 41 or 42.

In order to preclude adhesion of powder to fixing roller 41, it is required to apply silicone oil to its periphery or to clean the periphery by means of a cleaning roller. When a quantity of powder of powder image 7 adheres to fixing roller 41, powder is naturally transferred and adheres to pressing roller 42 because it is hard to adhere to roller 41 but readily adheres to roller 42. As a result, fixing roller 41 is maintained clean and free from powder at all times, and the tendency of recording a sheet to be wound thereon inadvertently can be precluded.

When recording sheet 6 is discharged from the contact portions of rollers 41 and 42, it is curved by a recess formed in roller 41 and its leading end moves in a direction along an imaginary line 11, so that recording sheet 6 frees itself from fixing roller 41 of its own accord.

In one example, fixing roller 41 made of silicone rubber and having a diameter of 50ϕ was heated to 160° to 180°C, and pressing roller 42 made of iron and having a diameter of 30ϕ was heated to 135° to 155°C. When recording sheet 6 was fed to rollers 41 and 42 at a rate of 10 cm/sec, it was possible to obtain good fixing of the powder image without powder adhering to roller 41 and without recording sheet 6 being wound inadvertently on roller 41.

FIG. 5 shows another embodiment comprising a fixing roller 51 made of a material to which powder is hard to adhere and a pressing roller made of a material to which powder is hard or slightly hard to adhere. Cleaning rollers 53 and 54 made of metal or other hard material to which powder readily adheres are kept in pressing engagement with rollers 51 and 52 respectively. Powder adhering to fixing roller 51 and pressing roller 52 is transferred and adheres to cleaning rollers 53 and 54, so that rollers 51 and 52 can be kept clean and free from powder at all times. With an increase in the quantity of powder adhering to cleaning rollers 53 and 54, the efficiency of cleaning rollers increases because each increment of powder increases the tackiness of the peripheries of cleaning rollers.

If the cleaning rollers 35, 36, 54 and 55 shown in FIG. 3 or FIG. 5 are heated to a degree such that the powder adhering to their peripheries becomes tacky, cleaning efficiency can be increased. A heater may be provided in each cleaning roller or each cleaning roller may be heated from outside for heating the cleaning rollers.

What is claimed is:

1. A powder image fixing device comprising a fixing roller having a resilient periphery with a surface to which powder of a powder image formed on a recording sheet is hard to adhere, a pressing roller having a hard periphery with a surface to which the powder readily adheres and maintained in pressing engagement with said fixing roller, means for heating at least the fixing roller, and means for feeding recording sheets each having a powder image formed thereon between said fixing roller and said pressing roller such that the powder image bearing surface of each recording sheet is

brought into contact with the periphery of the fixing roller.

2. A device as set forth in claim 1 wherein the periphey of said fixing roller is made of silicone rubber.

3. A device as set forth in claim 1 wherein the periphery of said pressing roller is made of metal with a bare metal surface maintained in pressing engagement with said fixing roller.

4. A device as set forth in claim 1 further comprising a cleaning roller having a periphery to which powder easily adheres and maintained in pressing engagement with said fixing roller.

5. A device as set forth in claim 1 further comprising a cleaning roller having a periphery to which powder readily adheres and maintained in pressing engagement with said pressing roller.

6. A powder image fixing device comprising a fixing roller having a resilient periphery with a surface to which powder of a powder image formed on a recording sheet is hard to adhere, a pressing roller having a hard periphery with a surface to which the powder readily adheres and maintained in pressing engagement with said fixing roller, said pressing roller pressing said fixing roller to a degree such that the periphery of the latter is slightly depressed, means for heating at least the fixing roller, and means for feeding recording sheets each having a powder image formed thereon between said fixing roller and said pressing roller such that the powder image bearing surface of each recording sheet is brought into contact with the periphery of the fixing roller.

7. A device as set forth in claim 6 wherein said fixing roller is made of silicone rubber and said pressing roller is made of metal with a bare metal surface maintained in pressing engagement with said fixing roller.

8. A device as set forth in claim 6 further comprising a cleaning roller having a periphery to which the powder readily adheres and maintained in pressing engagement with at least said pressing roller.

9. A device as set forth in claim 4, including means for heating said cleaning roller maintained in pressing engagement with said fixing roller, to effect heating of said cleaning roller to a degree such that the powder adhering thereto becomes tacky.

10. A device as set forth in claim 5, including means for heating said cleaning roller maintained in pressing engagement with said pressing roller, to effect heating of said cleaning roller to a degree such that the powder adhering thereto becomes tacky.

11. A device as set forth in claim 8, including means for heating said cleaning roller maintained in pressing engagement with said pressing roller, to effect heating of said cleaning roller to a degree such that the powder adhering thereto becomes tacky.

12. In a powder image fixing device, in combination,

a. a fixing roller having a resilient surface to which powder of a powder image is substantially nonadherent;
b. means for heating said fixing roller;
c. a pressing roller maintained in pressing engagement with said fixing roller for cooperating therewith in fixing a powder image on a recording sheet which is passed between the fixing and pressing rollers with the powder image facing the fixing roller; and
d. a cleaning roller having a hard surface to which the powder is readily adherent, maintained in pressing engagement with said fixing roller.

13. A method of fixing a powder image on a recording sheet, comprising advancing the recording sheet between first and second rollers with the image in facing relation to the first roller while maintaining said rollers in pressing engagement and while heating said sheet for fixing the image, said first roller having a resilient surface resistant to pickup of powder from the image and said second roller having a hard surface preferentially receptive to powder from the image, and thereafter rotating the rollers with their surfaces in direct pressing engagement with each other while maintaining said second roller surface preferentially receptive to powder as aforesaid, for effecting transfer to said second roller surface of any powder transferred to said first roller surface from said image.

14. A method according to claim 13, wherein said second roller surface is a bare metal surface and is brought into direct contact with said first roller surface for transfer of powder therefrom as aforesaid.

* * * * *