Oct. 9, 1951 L. NEWMAN 2,571,054

SWITCH PLATE FOR ELECTRICAL SWITCHES

Filed Oct. 22, 1949

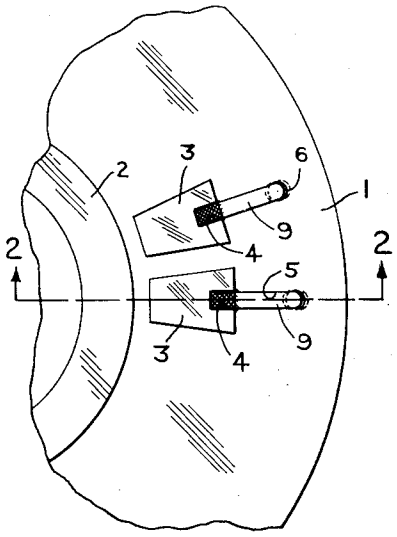

FIG. 1

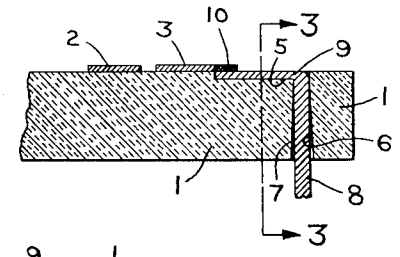

FIG. 2

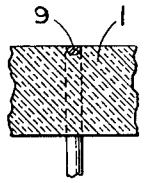

FIG. 3

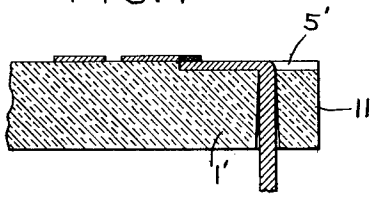

FIG. 5

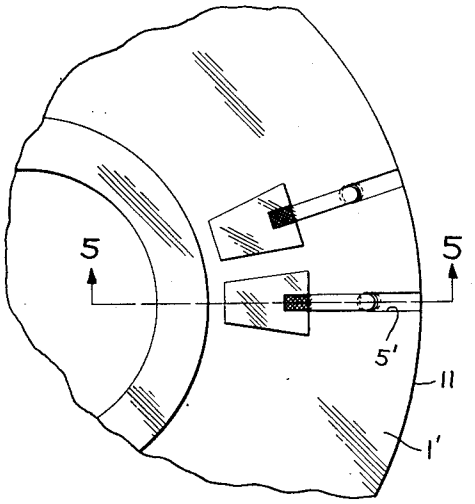

FIG. 4

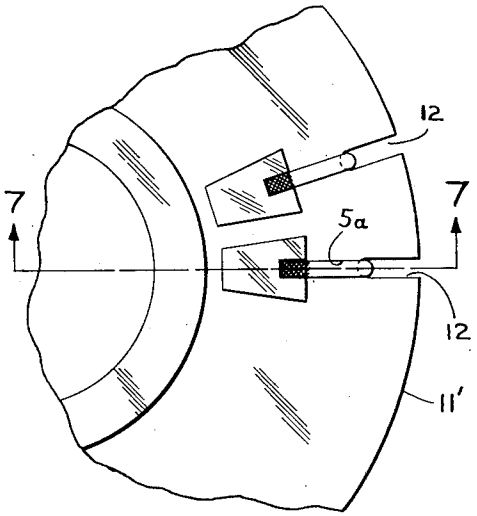

FIG. 6

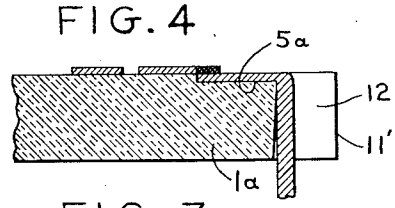

FIG. 7

LEWIS NEWMAN
INVENTOR.

BY [signature]
attorney

Patented Oct. 9, 1951

2,571,054

UNITED STATES PATENT OFFICE

2,571,054

SWITCH PLATE FOR ELECTRICAL SWITCHES

Lewis Newman, Harrison, N. J., assignor to The Daven Company, Newark, N. J., a corporation of New Jersey

Application October 22, 1949, Serial No. 122,979

7 Claims. (Cl. 200—166)

1

This invention relates to switch plates or panels used in electrical transmission control and, more particularly to such elements adaptable for use in various types of transducers employed in the electrical communications field.

Heretofore it has been the practice, in constructing switch plates of attenuators, potentiometers and various other analogous instruments to attach the contacts to the insulation carrying body by riveting, by upset sleeves or various other mechanical methods requiring labor in so mounting the contacts and requiring also relatively heavy contact pieces.

It is an object of the present invention to provide a switch plate wherein the contacts are deposited on the insulation carrying body by an electrolytic or electro-chemical process, thereby materially reducing the cost of the switch plate by reducing labor required in its construction and also by reducing the quantity of the relatively precious metal employed in making the contacts, and to provide a novel and relatively inexpensive, neat appearing practical manner of connecting the wire terminals to the contacts.

With these and other objects in view, as may appear from the accompanying specification, the invention consists of various features of construction and combination of parts, which will be first described in connection with the accompanying drawings, showing a switch plate for electrical switches of a preferred form embodying the invention, and the features forming the invention will be specifically pointed out in the claims.

In the drawings:

Figure 1 is a fragmentary top plan of a switch plate made in accordance with the present invention.

Figure 2 is a vertical section taken on the line 2—2 of Figure 1.

Figure 3 is a cross section taken on the line 3—3 of Figure 2.

Figure 4 is a top plan of a modified form of the invention.

Figure 5 is a vertical section taken on the line 5—5 of Figure 4.

Figure 6 is a fragmentary top plan of still another modified form of the invention.

Figure 7 is a cross section taken on the line 7—7 of Figure 6.

Referring more particularly to the drawings, the improved switch plate shown in Figures 1 to 3, inclusive, of the drawings includes a carrying plate 1 which is formed of any suitable insulating material which has an arcuate con-

2

tact 2 and a plurality of individual contacts 3 formed thereon by electro-chemical or electrolytic plating. Any of the approved methods of electrolytically depositing the metal of the contacts upon the insulation carrying body 1, such as that disclosed in prior Patent 1,563,731, issued December 1, 1925, may be employed. By so depositing the metal of the contacts upon the carrying plate 1 of insulation a relatively thin layer of the metal may be deposited, and since the metal so used is usually a relatively precious metal cost of production of the switch plate may thus be materially reduced, not only by reducing the amount of metal used for the contacts but also by greatly reducing the amount of labor required for connecting the contacts to the carrying plate of insulation.

The contacts 3 are provided with recesses 4 extending inwardly thereinto from one side thereof and the carrying plate or body 1 is provided with radial grooves 5 cut therein, the inner ends of which extend directly below the recesses 4 formed in the contacts 3. In Figures 1 to 3 of the drawings the outer ends of the grooves 5 terminate at the openings 6 which extend transversely through the carrying plate 1. As clearly shown in Figure 2 of the drawings, the openings 6 increase in cross sectional area from their points of communication with the grooves 5 to their opposite ends. This increase in cross sectional area is provided with angling the inner walls 7 of the openings. The openings 6 are so made to facilitate the insertion therethrough of the connecting wires 8. The connecting wires 8 have transversely extending portions 9 which fit in the grooves 5 and extend into the portion of the grooves directly beneath the recesses 4. The connecting wires 8 are soldered to the contacts 3 by a deposit of solder shown at 10 in Figure 2 of the drawings. The deposit 10 of solder is flattened or smoothed so that its outer surface lies flush with or substantially flush with the outer surfaces of the contacts 3, and the solder filling the recesses 4 and contacting the wires 8 form firm electrical conducting connection between the wires 8 and the contacts 3. If it is so desired, the angular sections 9 of the wires 8 may be flattened as shown in Figure 3 of the drawings so as to present flat upper surfaces outwardly, or they may be left round and the grooves 5 cut sufficiently deep to prevent the angled sections 9 from projecting beyond the face of the plate 1.

In the modified form shown in Figure 4 of the drawings, the construction of the switch plates

is identical, excepting only that the grooves 5' extend all the way out to the edge 11 of the plate 1 of insulation.

In the modified form shown in Figures 6 and 7 of the drawings, the only difference in the construction between that shown and described in Figures 1 to 3 of the drawings is that the openings which extend transversely through the plate 1a of insulation are in the form of slots 12 which extend radially from the outer ends of the grooves 5a to the edge 11' of the plate 1a.

It will be understood that the invention is not to be limited to the specific construction or arrangement of parts shown, but that they may be widely modified within the invention defined by the claims.

What is claimed is:

1. In an electrical switch, an insulation contact carrying plate, a plurality of individual metal contacts electrolytically deposited on said carrying plate, certain of said contacts having recesses extending thereinto from one edge thereof, said carrying plate having grooves therein corresponding to and extending beneath the recesses of the recessed contacts, and connection wires in said grooves extending into the grooves below said recesses and soldered to said contacts.

2. In an electrical switch, an insulation contact carrying plate, a plurality of individual metal contacts on said carrying plate, certain of said contacts having recesses extending thereinto from one edge thereof, said carrying plate having grooves therein corresponding to and extending beneath the recesses of said recessed contacts, and connection wires in said grooves extending beneath said recesses and soldered to said contact, said carrying plate having transverse openings therethrough communicating with said grooves, and said connecting wires extending through said transverse openings.

3. In an electrical switch, an insulation contact carrying plate, a plurality of individual metal contacts on said carrying plate, certain of said contacts having recesses extending thereinto from one edge thereof, said carrying plate having grooves therein corresponding to and extending beneath the recesses of said recessed contacts, and connection wires in said grooves extending beneath said recesses and soldered to said contacts, said carrying plate having transverse openings therethrough communicating with said grooves, and said connecting wires extending through said transverse openings, the portions of said connecting wires lying in said grooves having their outermost portions substantially flush with the face of said contact carrying plate.

4. In an electrical switch, an insulation contact carrying plate, a plurality of individual metal contacts on said carrying plate, certain of said contacts having recesses extending thereinto from one edge thereof, said carrying plate having grooves therein corresponding to and extending beneath the recesses of said recessed contacts, and connection wires in said grooves extending beneath said recesses and soldered to said contact, said carrying plate having transverse openings therethrough communicating with said grooves, and said connecting wires extending through said transverse openings, said transverse openings gradually increasing in cross sectional area from their points of communication with said grooves to their opposite ends.

5. In an electrical switch, an insulation contact carrying plate, a plurality of individual metal contacts electrolytically deposited on said carrying plate, certain of said contacts having recesses extending thereinto from one edge thereof, said carrying plate having grooves therein corresponding to and extending beneath the recesses of the recessed contacts and connection wires in said grooves extending into the grooves below said recesses and soldered to said contacts, said contact carrying plate having transverse openings extending therethrough and communicating with said grooves, said connecting wires extending through said transverse openings, the portions of said connecting wires lying in said grooves having their outermost portions substantially flush with the adjacent flat surface of said contact carrying plate, the solder forming the soldered joint between said contacts and wires being flattened on the outer surfaces and flush with the outer surfaces of the contacts.

6. In an electrical switch, an insulation contact carrying plate, a plurality of individual metal contacts electrolytically deposited on said carrying plate, certain of said contacts having recesses extending thereinto from one edge thereof, said carrying plate having grooves therein corresponding to and extending beneath the recesses of the recessed contacts, and connection wires in said grooves extending into the grooves below said recesses and soldered to said contacts, said carrying plate having transverse slots cut therethrough communicating with the grooves and opening out through the edge of said carrying plate, said connecting wires extending through said slots.

7. In an electrical switch, an insulation contact carrying plate, a plurality of individual metal contacts electrolytically deposited on said carrying plate, certain of said contacts having recesses extending thereinto from one edge thereof, said carrying plate having grooves therein corresponding to and extending beneath the recesses of the recessed contacts, and connection wires in said grooves extending into the grooves below said recesses and soldered to said contacts, said carrying plate having transverse slots cut therethrough communicating with the grooves and opening out through the edge of said carrying plate, said connecting wires extending through said slots, said transverse slots having their inner walls inclined whereby the slots gradually increase in cross sectional area from their points of communication with said grooves to their opposite ends.

LEWIS NEWMAN.

REFERENCES CITED

The following references are of record in the file of this patent:

UNITED STATES PATENTS

Number	Name	Date
1,505,003	Zint	Aug. 13, 1924
2,066,511	Arlt	Jan. 5, 1937
2,210,842	Schellenger	Aug. 6, 1940