Oct. 26, 1954 M. J. SHNITZLER ET AL 2,692,674

BLADE DISPENSING MAGAZINE

Original Filed Oct. 15, 1948 3 Sheets-Sheet 1

Fig. 1

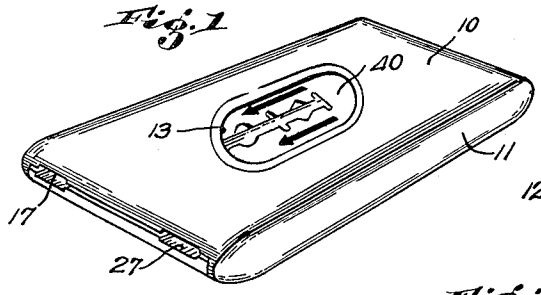

Fig. 2

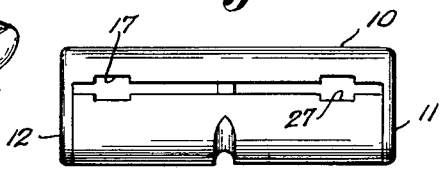

Fig. 3

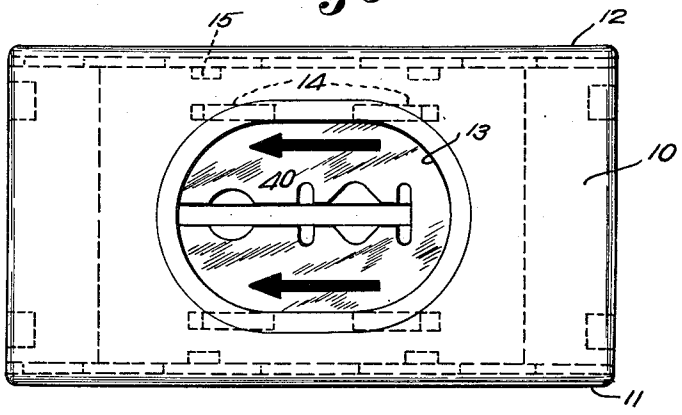

Fig. 4

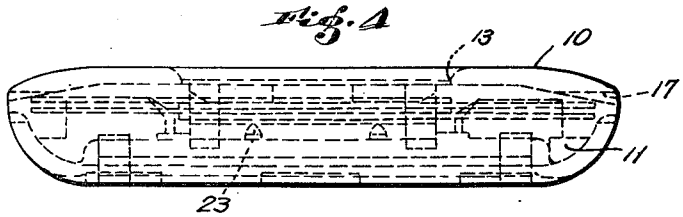

Fig. 5

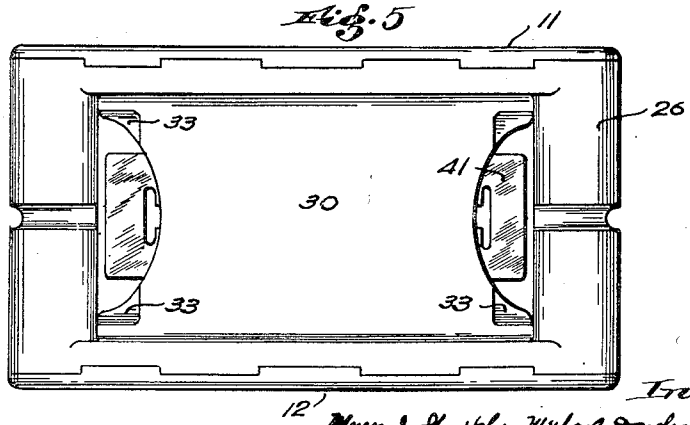

Inventors
Meyer J. Shnitzler, Michael Douglas Benedict Jr.
& Ralph Abrams By Philip Colman
Atty.

Oct. 26, 1954 M. J. SHNITZLER ET AL 2,692,674

BLADE DISPENSING MAGAZINE

Original Filed Oct. 15, 1948 3 Sheets-Sheet 2

Fig. 6

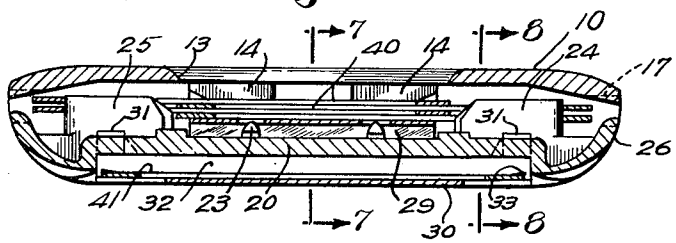

Fig. 7

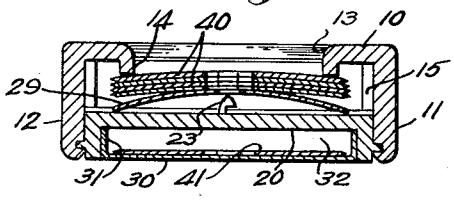

Fig. 8

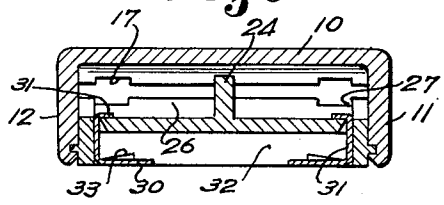

Fig. 9

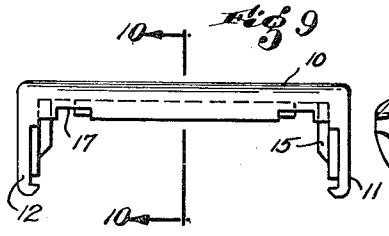

Fig. 10

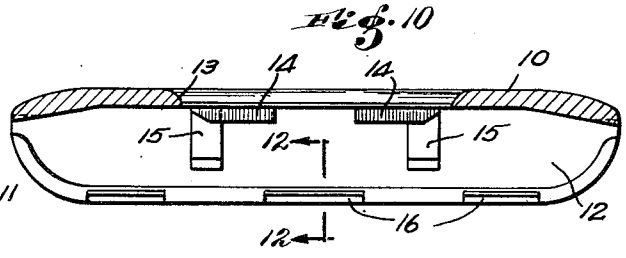

Fig. 11

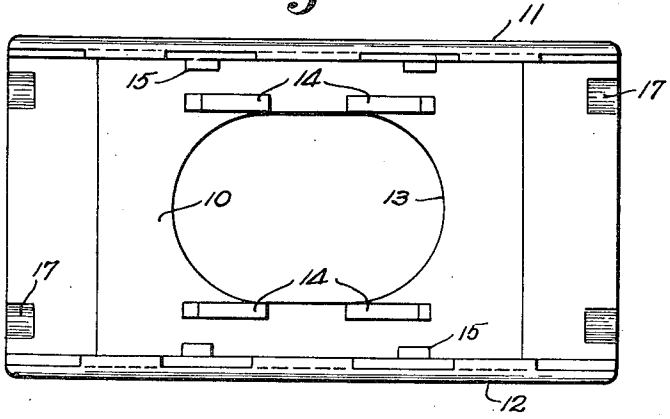

Fig. 12

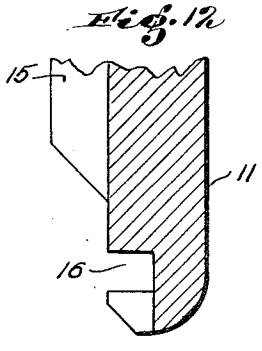

Inventors
Meyer J. Shnitzler, Michael Douglas Benedict Jr.
& Ralph Abrams. By Philip Colman
Atty.

Oct. 26, 1954 M. J. SHNITZLER ET AL 2,692,674

BLADE DISPENSING MAGAZINE

Original Filed Oct. 15, 1948 3 Sheets-Sheet 3

Fig. 13

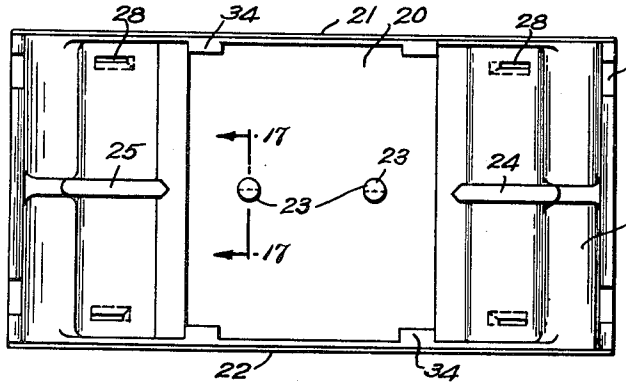

Fig. 17

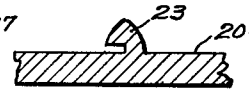

Fig. 18

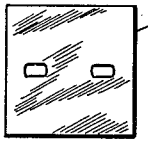

Fig. 19

Fig. 14

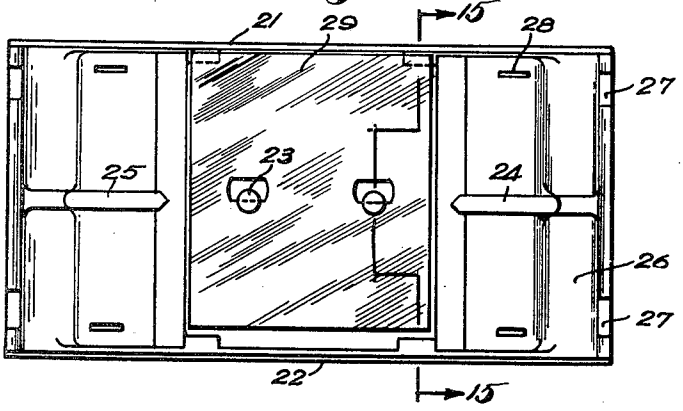

Fig. 15

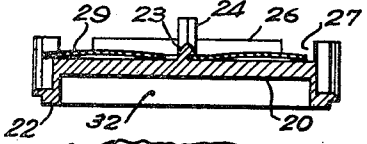

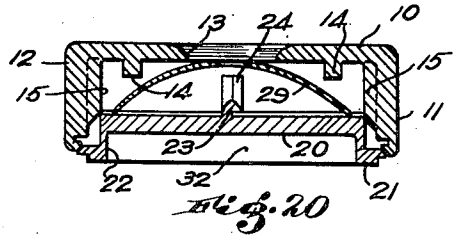

Fig. 20

Fig. 16

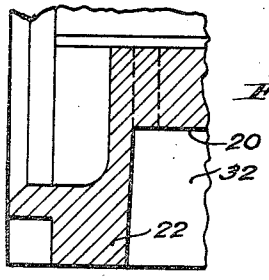

Inventors
Meyer J. Shnitzler, Michael Douglas Benedict Jr.
& Ralph Abrams. By Philip Colman
Atty.

Patented Oct. 26, 1954

2,692,674

UNITED STATES PATENT OFFICE

2,692,674

BLADE DISPENSING MAGAZINE

Meyer J. Shnitzler, Brookline, Michael Douglas Benedict, Jr., Wollaston, and Ralph Abrams, Sharon, Mass., assignors to The Gillette Company, a corporation of Delaware

Original application October 15, 1948, Serial No. 54,782. Divided and this application July 24, 1952, Serial No. 300,666

3 Claims. (Cl. 206—16)

1

This invention comprises a new and improved magazine for dispensing unwrapped sharp-edged blades, such as safety razor blades.

The present application is a division of our co-pending application Serial No. 54,782, filed October 15, 1948, in which claims have been presented to a blade magazine with auxiliary blade compartment.

As herein shown, but not necessarily, the invention is embodied in a magazine constructed and arranged for containing an ample supply of unwrapped blades with their keen cutting edges safely guarded from damage and in convenient position to be ejected by the user one by one as required for shaving, together with a chamber or compartment contained within the general contour of the magazine to which the blades may be delivered one by one when they have become dulled in use. Thus, in a compact and unitary device the user is supplied with a convenient source of fresh sharp blades and a convenient and safe receptacle for the disposition of used blades.

It is desirable in many cases for the manufacturer to load or charge the magazine with a stack of sharp blades which are maintained in predetermined position within the magazine by a normally bowed spring and to maintain the spring in flattened and inoperative condition during the charging operation. In this aspect, another feature of the invention comprises the provision of a hooked stud on the inner face of one of the blade-enclosing members of the magazine by which the spring may be located in flattened condition and in a position to extend into the path of a beveled surface shaped to engage and shift the flattened spring into operative condition in the routine movement of bringing the magazine parts together in assembled relation.

Another feature of the invention consists in a blade-positioning spring which is transversely bowed and which engages the bottom of the magazine at its side edges where the bottom is stiffened by the side walls of the magazine and thus reinforced against distortion which sometimes occurs in plastic articles maintained under long continued stress.

These and other features of the invention will be best understood and appreciated from the following description of a preferred embodiment thereof selected for purposes of illustration and shown in the accompanying drawings in which:

Fig. 1 is a view in perspective of the complete magazine;

2

Fig. 2 is an end view of the same upon an enlarged scale;

Figs. 3, 4 and 5 are respectively views in plan, side elevation and bottom plan;

Fig. 6 is a view in central longitudinal section;

Figs. 7 and 8 are views in cross-section respectively on the lines 7—7 and 8—8 of Fig. 6;

Figs. 9, 10 and 11 are views of the top member of the magazine respectively in end elevation, longitudinal section and bottom plan;

Fig. 12 is a fragmentary view on a still larger scale of one wall of the top member;

Figs. 13 and 14 are top plan views of the bottom member of the magazine;

Fig. 15 is a cross-sectional view of the bottom member on the line 15—15 of Fig. 14;

Fig. 16 is a fragmentary view on a greatly enlarged scale of one wall of the bottom member;

Fig. 17 is a fragmentary view in cross-section on the line 17—17 of Fig. 13;

Figs. 18 and 19 are views of the spring respectively in plan and end elevation; and

Fig. 20 is a view of the magazine in cross-section showing the spring in released position.

The magazine in its illustrated form comprises a top member 10 rectangular in contour with end portions which slope symmetrically downwardly, thus contributing to a tapering end effect in the magazine as a whole. The member 10 may be molded of resinous material or fashioned from light metal and may be made in particular attractive form from Vinylite or other transparent or translucent material. It includes upright side walls 11 and 12 which are stiff but slightly resilient. It is provided in its upper face with an oval finger opening 13 through which the uppermost blade of the stack contained in the magazine is exposed and may be reached by the user when he desires to withdraw it for use. As shown in Figs. 6, 7 and 10, four short ribs 14 project downwardly from the inner face of the top portion of the magazine, these ribs being located in pairs upon opposite sides of the finger opening 13, and adjacent to its side edges. The lower edges of the ribs 14 lie in a common plane and determine the vertical position of the blade stack within the magazine.

Each of the inner walls of the top member is provided with a pair of flat vertically extending ribs 15 beveled at their lower ends and so presenting inclined cam surfaces. These cam surfaces have the function of shifting a bowed spring into operative position on the bottom member of the magazine when the magazine parts are assembled as will presently appear.

Each of the side walls 11 and 12 is provided with a series of longitudinal slots 16 shaped to interlock with corresponding projections formed in the side walls of the bottom member. The end edges of the upper member 10 are designed to provide the upper edge of an exit slot at each end of the magazine and each of these edges is provided with a square notch 17 so located as to provide ample clearance for both sharp edges of a blade being ejected or removed from the magazine or for any other purpose.

Cooperating with the top member, which has just been described, in providing an enclosure for the blade stack is a bottom member 20 which is also rectangular in outline and has upwardly curved end portions which are spaced at their outer ends from the corresponding end portions of the top member so as to provide the exit slots of the magazine. The bottom member includes down-turned side walls 21 and 22 as best shown in Figs. 13–16 and these are engaged and overlapped in the assembled structure by the side walls 11 and 12 of the top member. From the inner face of the bottom member project a pair of undercut studs 23, each providing a catch to hold a normally bowed spring in flat condition as will be presently described. A pair of blade-locating ribs 24 and 25 extend upwardly from the inner face of the bottom member being located symmetrically in the major axis of the magazine with a substantial open free space between their inner ends. The upwardly curving end portions 26 of the bottom member are provided with square notches 27 arranged to register with the notches 17 already referred to.

The bottom member is also provided with two pair of narrow straight slots 28 located on opposite sides of the ribs 24—25.

A spring plate or blade 29 for positioning the blade stack as shown in Figs. 18 and 19 is substantially rectangular and provided in its major axis with a pair of elongated slots spaced to correspond to the spacing of the studs 23. The spring is normally bowed transversely as shown in Figs. 19 and 20 or may be forcibly flattened against the inner face of the bottom member. The studs 23 then pass through its slots and the spring may be located temporarily and flattened in inoperative position by having the edges of its slots slipped into the throat of the undercut studs as shown in Fig. 15. In this locked position one edge of the spring projects over one edge of the inner face of the lower member 20 and beyond its marginal edge. The spring 29 is latched in this inoperative position preparatory to placing the blades in stacked position upon the lower member of the magazine. In bringing top and bottom members of the magazine into assembled relation, the beveled faces of the ribs 15 on the top member encounter the projecting edge of the spring 29 and shift it laterally toward the right, as seen in Fig. 15, thereby disengaging it from the studs 23 and permitting it to assume its normally-bowed condition, as shown in Fig. 20. It will be understood that no blades are shown in Fig. 20, and it may be assumed that the spring is expanded sufficiently to locate the last blade of the stack in ejecting position and that the blade has been removed from the magazine. The side walls 21 and 22 on the bottom element are provided with projecting ribs which fit into and interlock with the slots 16 of the top member. The meeting edges of the side walls 11 and 12, 22 and 21 are beveled as shown in Fig. 20 so that the side walls 11 and 12 may be sprung sufficiently when forced together to permit such interlocking engagement.

The bottom member 20 includes in its lower face an inwardly offset partition or platform forming beneath it an elongated rectangular chamber 32, as best shown in Fig. 6, and this is converted into a receptacle for used blades by a cover 30, best shown in Fig. 5, which is provided with four projecting legs 31 one at each corner shaped to be inserted through the slots 28 of the bottom member and clinched over upon its inner face as shown in Fig. 8.

The inwardly offset area is defined at its opposite ends by transverse walls each located a substantial distance inwardly from the curved end of the bottom member 20. The receptacle for used blades is, therefore, substantially shorter than the magazine chamber for new blades, and the reason for this is that in the magazine the blades are arranged in longitudinally staggered relation, whereas the used blades may be conveniently stacked in substantial registration. It will be noted that there is a space of substantial size enclosed between the inner face of the transverse walls and the ends of the magazine. The construction above-described contributes largely to a desirable compactness of the composite device and adapts it mechanically for the two purposes for which it is intended.

The opposite end edges of the cover 30 are shaped to present concave curves in its flat face and thus inlet openings are provided in the bottom wall of the receptacle through which successive used blades may be inserted, being slightly flexed in the process over the curved end portions of the bottom member and then lying in flat position within the chamber 32 in which they are thus safely retained. If desired, flanges or indentations 33 may be formed in the opposite corners of the cover 30, to exaggerate the flexing required in inserting the used blades.

The magazine is herein shown as designed to contain and receive safety razor blades 40 of a well-known commercial type, that is to say, blades having a centrally elongated slot and corner notches providing elongated unsharpened end portions. Such blades may be conveniently arranged in staggered relation upon the studs 24 and 25 of the magazine and may be removed one after another by endwise movement through alternate ends of the magazine. The stack is meanwhile maintained in predetermined position bowed slightly in a transverse sense and with the uppermost blade engaged by the ribs 14 as already described. With the blade stack so located, the uppermost blade, as shown in Fig. 6, is properly positioned to be ejected through the left-hand exit slot of the magazine. For this purpose it may be engaged by the thumb or finger of the user inserted through the finger opening 13 and moved toward the left, its longitudinal slot permitting it to move freely until it has been ejected for about one-half its length so that it may be conveniently grasped by the user. In its further movement, its rear solid end rides smoothly up the inner beveled edge of the stud 25, passing over it and out through the exit slot. The longitudinal guide ribs 24 and 25 cooperate with the slots of the blades in guiding each successive blade in a rectilinear path in which its sharpened edges pass through the notches 17—27 of the exit slots, thus providing clearance that safeguards the keen fine edges of the blade.

It will be understood that the blades are ar-

ranged in longitudinally staggered relation upon the studs 24 and 25 as shown in Fig. 6, each blade being held positively against movement in one direction but free for ejecting movement in the other direction. For example, in Fig. 6 the uppermost blade is held by the rib 25 against movement toward the right but is free to move toward the left until its right-hand solid end portion encounters the inner beveled edge of the rib 25. The end portion of the blade is then flexed in riding over the rib and a slight amount of frictional resistance maintained. Similarly the second blade of the stack shown in Fig. 6 is held against movement toward the left but free, in its turn, to be moved toward the right.

A desirable feature of the invention resides in the construction and arrangement of the transversely curved spring 29 whose function is to hold the stack with its uppermost blade in contact with the ribs 14. It has been found that a stressed spring has the tendency to cause slow distortion of a magazine shell of resinous plastic material when stress is applied continuously near opposite ends of the magazine. Even a slight deflection of the shell upsets the accuracy of the feeding contacts and may cause the blades to jam in the exit slots. We have found that the tendency to distort is obviated by arranging the stressed edges of the spring to engage the bottom of the magazine at transversely opposite edges in locations where the bottom is reinforced by the stiffening effect of the side walls.

Having thus disclosed our invention and described in detail an illustrative embodiment thereof, we claim as new and desire to secure by Letters Patent:

1. A blade magazine comprising top and bottom members having engaged overlapping side walls and providing together an enclosure for a stack of blades, the contacting edges of said side walls being beveled and making a forced fit with each other and one wall of the top member presenting an inwardly and upwardly inclined cam surface, a stud on the bottom member undercut on one side to form a catch, a stack of blades within the enclosure and a normally bowed spring held in flattened position by the catch beneath the stack and initially projecting at the side of the bottom opposite the undercut side of the stud into range of movement of said cam surface when the two members are moved into assembled relation, whereby the spring may be shifted and released from said catch.

2. A blade magazine comprising a plastic bottom member having a substantially rectangular face provided with a stud transversely undercut to form a catch, a spring plate normally bowed transversely and having an internal aperture in line with said projection, said spring plate being flattened and an edge of the aperture being in engagement with the catch, a stack of blades overlying said spring plate, and a top member having a downturned side wall with a portion having a beveled edge contacting one edge of the spring plate to move said plate out of engagement with said catch when the top member is assembled with the bottom member.

3. A blade magazine comprising top and bottom members having connected side walls and providing together an enclosure for a stack of blades, one wall of the top member presenting an inwardly and upwardly inclined cam surface, a stud on the bottom member undercut on one side to form a catch, a stack of blades within the enclosure and a normally bowed spring held in flattened position by the catch beneath the stack and initially projecting at the side of the bottom opposite the undercut side of the stud into range of movement of said cam surface when the two members are brought into assembled relation, whereby the spring may be shifted and released from said catch.

References Cited in the file of this patent

UNITED STATES PATENTS

Number	Name	Date
1,379,659	Talbot	May 31, 1921
1,389,387	Shugers	Aug. 30, 1921
2,311,173	Hill	Feb. 16, 1943
2,327,120	McCoon	Aug. 17, 1943
2,339,480	Hollis	Jan. 18, 1944
2,411,669	Roberts	Nov. 26, 1946
2,418,677	Testi	Apr. 8, 1947
2,510,630	Goldsworthy	June 6, 1950
2,536,109	Testi	Jan. 2, 1951