No. 722,839. PATENTED MAR. 17, 1903.

G. G. GUY.

TOWER.

APPLICATION FILED MAR. 17, 1902.

NO MODEL. 2 SHEETS—SHEET 1.

Fig. 1.

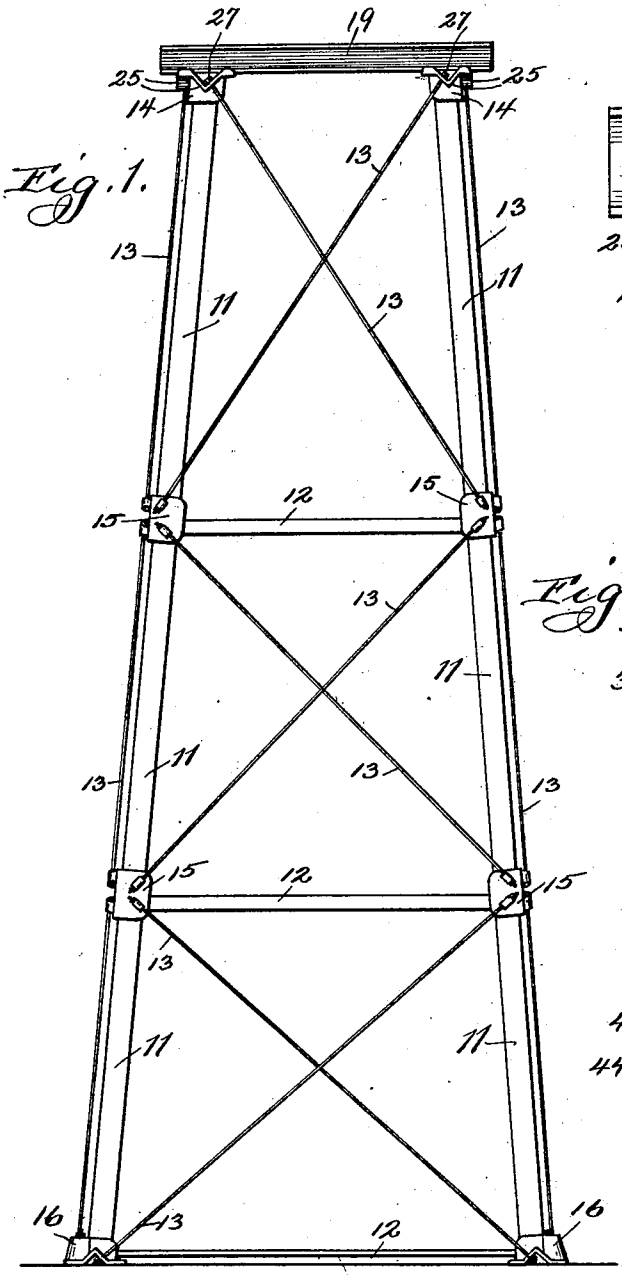

Fig. 2.

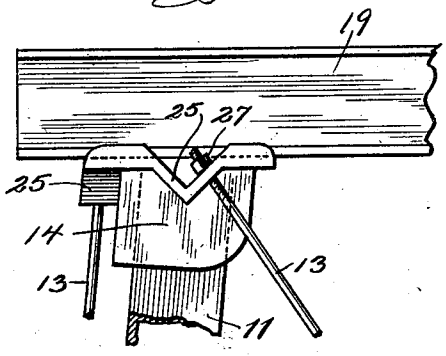

Fig. 3.

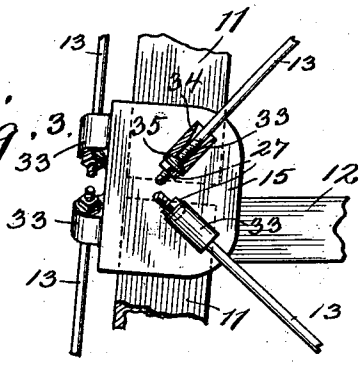

Fig. 4.

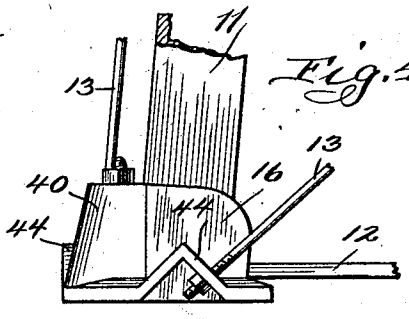

Witnesses:
R. J. Jacker
R. K. Gustafson.

Inventor:
George G. Guy,
By Colum, McRobert & McElroy,
Attys.

THE NORRIS PETERS CO., PHOTO-LITHO., WASHINGTON, D. C.

No. 722,839. PATENTED MAR. 17, 1903.

G. G. GUY.

TOWER.

APPLICATION FILED MAR. 17, 1902.

NO MODEL. 2 SHEETS—SHEET 2.

Fig. 5.

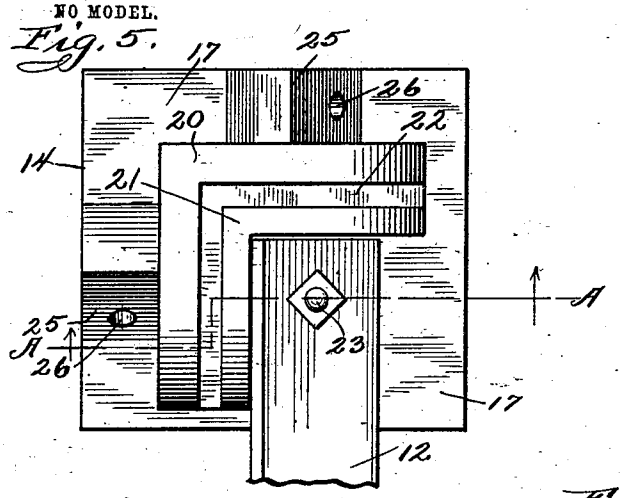

Fig. 6.

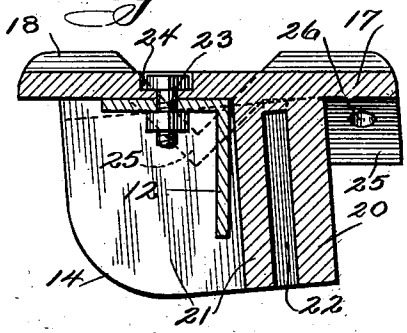

Fig. 7.

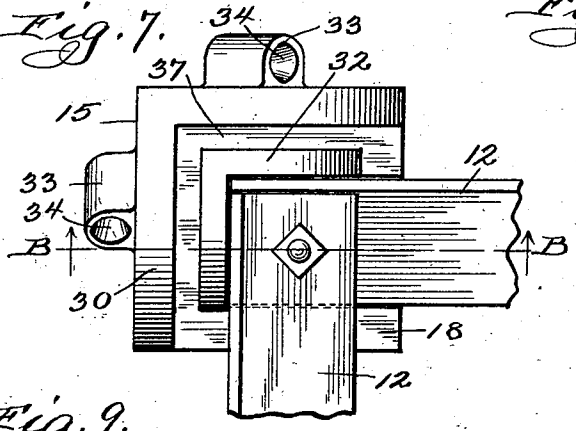

Fig. 8.

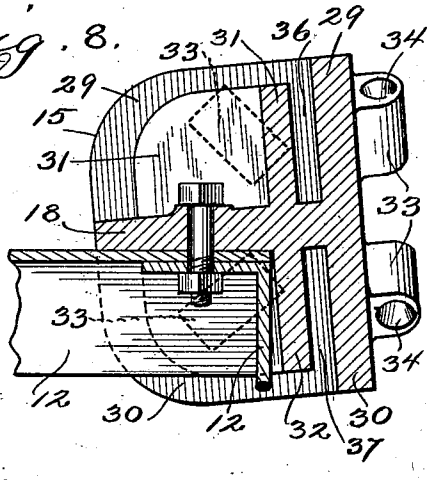

Fig. 9.

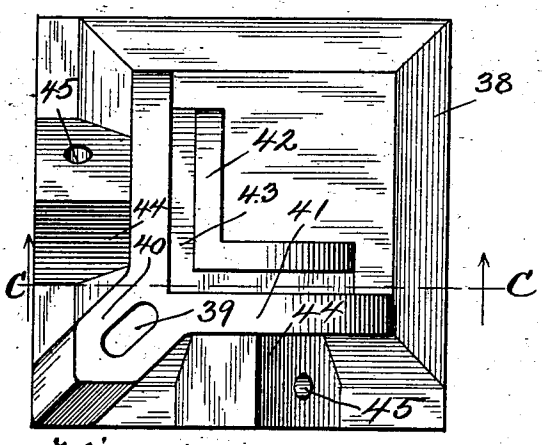

Fig. 10.

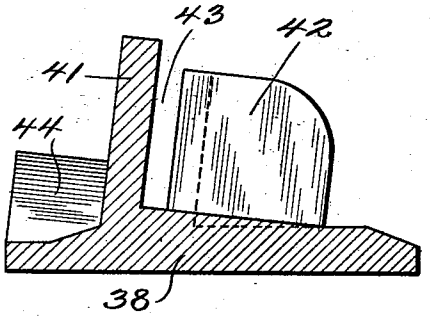

Witnesses:
R. J. Jaeckel
R. K. Gustafson.

Inventor:
George G. Guy,
By Coburn, McRobert & McElroy
Attys.

THE NORRIS PETERS CO., PHOTO-LITHO., WASHINGTON, D. C.

UNITED STATES PATENT OFFICE.

GEORGE G. GUY, OF BATAVIA, ILLINOIS, ASSIGNOR TO UNITED STATES WIND ENGINE & PUMP COMPANY, OF BATAVIA, ILLINOIS, A CORPORATION OF ILLINOIS.

TOWER.

SPECIFICATION forming part of Letters Patent No. 722,839, dated March 17, 1903.

Application filed March 17, 1902. Serial No. 98,464. (No model.)

To all whom it may concern:

Be it known that I, GEORGE G. GUY, a citizen of the United States, residing at Batavia, in the county of Kane and State of Illinois, have invented certain new and useful Improvements in Towers, of which the following is a specification.

My invention is concerned with a certain novel and useful tower construction and with the novel forms of standard joints or castings by which towers of any desired dimensions can be built by employing said castings together with the upright beams, cross-beams, and tie-rods cut into any lengths that may be necessary for the dimensions of the particular tower to be built. It will thus be seen that my invention is concerned with the method of construction and the standard castings employed, by which I am able to construct a tower of any desired dimension without any special preparation therefor and by the employment of the same standard castings for all sizes of towers.

To illustrate my invention, I annex hereto two sheets of drawings, in which the same reference characters are used to designate identical parts in all the figures, of which—

Figure 1 is a side elevation of a tower constructed in accordance with my invention. Fig. 2 is a side elevation of one of the top corners thereof, showing the top casting and its associated parts. Fig. 3 is a similar view of one of the intermediate joints, showing the intermediate casting and its associated parts. Fig. 4 is a similar view of one of the lower corners, showing the bottom casting and its associated parts. Fig. 5 is an inverted plan view of a top casting, showing the end of the cross-beam in position, but with its other associated parts omitted. Fig. 6 is a view in section on the line A A of Fig. 5. Fig. 7 is an inverted plan view of one of the intermediate castings with the ends of its cross-beams in position, but with its other associated parts removed. Fig. 8 is a view in section on the line B B of Fig. 7. Fig. 9 is a top plan view of the bottom casting, and Fig. 10 is a sectional view thereof on the line C C of Fig. 9.

As will be seen from Fig. 1, the tower is composed of the upright beams 11, the cross-beams 12, the tie-rods 13, and the top, intermediate, and bottom castings 14, 15, and 16, respectively. In the preferred form shown these upright beams 11 and cross-beams 12 are composed of strips of angle-iron and are of the necessary size and strength for the particular tower for which they are designed. The tie-rods 13 are of the ordinary construction and coöperate with certain apertures in lugs and flanges on the castings, to be described.

Referring now to Figs. 5 and 6, the top casting 14 has the horizontal web 17, constituting the top thereof, provided in one direction with the channel 18, adapted to receive the cross-beam 19, upon which the tank or other article to be supported on the top of the tower is placed. Projecting downward from the under surface thereof is the outside angular flange 20, which is set in both directions at an angle to the web 17, which corresponds to the slope of the sides of the tower. For the ordinary square tower for which this casting is especially designed this angular flange will be a right angle. For a triangular tower it would have an angle of sixty degrees, and for a hexagonal tower it would have an angle of one hundred and twenty degrees, the size of the angle varying directly as the number of sides of the tower. At a suitable distance within the angular flange 20 is a similar angular flange 21, the two being separated by a sufficient space to form an angular channel 22, into which the upper ends of the uppermost angle-iron upright beams 11 fit. Within the angular flange 21 the under side of the web 17 is horizontal, so that the cross-beam 12 will be drawn securely to the casting by means of the bolt 23, the head of which is conveniently dropped into the recess 24, formed in the upper surface of the web 17 to receive it. The outer portion of the web 17 forms a flange, as it were, outside of the angular inclined flange 20, and in these flanges on both of the outer sides I preferably form the angles 25, which have their outer sides pierced by the holes 26, through which the tie-rods 13, coöperating with these castings, pass. The nuts 27, placed on one or

both ends of the tie-rods, enable me to put them under any desired degree of tension without the employment of the intermediate turnbuckles hitherto employed in this class of devices.

Referring to Figs. 7 and 8, the intermediate casting 15 will be seen to consist of the central horizontal web 28, preferably rectangular in outline and bounded on its outer edges by the angular flanges 29 and 30, which correspond in position and function to the angular flanges 20 on the top castings. Each of these castings is also provided with the inner angular flanges 31 and 32, corresponding in location, direction, and function to the angular inclined flanges 21 of the top castings. Like the top casting, the web 28 has its under surface horizontal and adapted to coöperate with the overlapping ends of the cross-beams 12 in the same manner as in the case of the top casting. Instead of providing exterior flanges with the angles 25 in them I preferably employ four lugs 33, two on each of the outer sides and set at right angles to each other and at an angle of substantially forty-five degrees above and below the horizontal. These lugs 33 have the flaring apertures 34 therein, the flare being provided in order that the tie-rods 13 may accommodate themselves to the different angles they may have to assume, as shown in Fig. 1. In the outer ends of the lugs 33 I preferably make the apertures 34 semispherical in outline, as seen in Fig. 3, and provide a semispherical washer 35, coöperating therewith. Of course the lower ends of the upright beams above these castings fit into the channels 36 between the flanges 29 and 31 and the upper ends of the upright beams 11 below the castings fit into the channels 37, formed between the flanges 30 and 32.

The bottom castings, as seen in Figs. 9 and 10, consist of the heavy horizontal base-plate 38, adapted to rest on the foundation and be secured by a bolt passing through the recess 39, formed in the vertical rib 40, projecting upward from the outermost corner thereof. The upper surface of the rib 40 is coincident with the upper surface of the angular flange 41, projecting upward from the base-plate 38 at the same angle thereto as the flange 29 on the intermediate casting 15, to which it corresponds in location and function. The angular inner flange 42, coöperating therewith and corresponding to the inner flange 31 of the intermediate casting 15, extends upward from the base, the two flanges 41 and 42 between them forming the channel 43, which receives the lower end of the coöperating upright beams 11. The upper surface of the web 38 inside of the flange 42 is made horizontal to receive the lowermost cross-beams 12, which are preferably made of flat beams instead of angle-irons, as shown in Fig. 1. The web 38 is provided with an outer flange corresponding to that on the top casting 14, and this outer flange is provided with the angles 44 therein, which have on the outer sides thereof apertures 45 to receive the ends of the coöperating tie-rods 13.

By means of the construction herein described it will be seen that I am by means of the employment of the standard castings and the necessary lengths of upright beams, cross-beams, and tie-rods enabled to construct a tower of any desired dimensions, all of the towers built of one standard set of castings having the same number and inclination of its sides. The construction is simple and durable and can be readily assembled by comparatively unskilled labor and with very simple directions.

While I have shown my invention as embodied in the form which I at present consider the best adapted for its purposes, it will be understood that it is capable of modifications, and that I do not desire to be limited in the interpretation of the following claims except as may be necessitated by the state of the prior art.

What I claim as new, and desire to secure by Letters Patent of the United States, is—

1. A tower composed of the top, bottom, and intermediate joints, together with the upright and cross beams, and the tie-rods, the joints being provided with the recesses for the upright beams terminating on the substantially horizontal webs and the apertures for the tie-rods, the tie-rod apertures being outside of the vertical plane of the recesses for the beams; substantially as described.

2. A tower composed of the top, bottom, and intermediate joints, together with the angular upright and cross beams, the joints having the inner and outer angular flanges forming inclined recesses to coöperate with the ends of the upright beams, and the recesses for the ends of the cross-beams within the inner flanges; substantially as described.

3. A tower composed of the top, bottom, and intermediate joints, together with the angular upright and cross beams, and the tie-rods, the joints being provided with the angular flanges forming the inclined recesses to coöperate with the ends of the upright beams, the recesses for the ends of the cross-beams within the inner flanges, and the apertures for the tie-rods located in the projections on the outer sides of the outer flanges; substantially as described.

4. A tower composed of the top, bottom, and intermediate joints, together with the angle-iron upright beams, the cross-beams, and the tie-rods, the joints having the angular flanges thereon forming the inclined angular recesses to coöperate with the ends of the upright beams, the recesses for the ends of the cross-beams within the inner flanges, and the projections from the outer surfaces of the outer flanges having the inclined apertures for the tie-rods therein; substantially as described.

5. As a new article of manufacture, a standard tower-joint consisting of the horizontal web having the substantially vertical angular

flanges thereon, and the apertured lugs on the outer faces of said flanges for the purpose described.

6. As a new article of manufacture, a standard joint for tower constructions consisting of the horizontal web having a pair of angular flanges projecting upward and downward therefrom forming inclined recesses adapted to coöperate with the ends of the upright beams, and having the recesses within the angle of the inner flange for the ends of the cross-beams; substantially as described.

7. As a new and useful article of manufacture, a standard joint for tower constructions composed of the horizontal web having substantially vertical flanges thereon forming the inclined recesses to coöperate with the ends of the upright beams, the recesses for the ends of the cross-beams formed beneath the horizontal end surface of the web within the inner flange, and the apertured lugs on the outer faces of the outer flanges adapted to coöperate with the tie-rods; substantially as and for the purpose described.

In testimony whereof I affix my signature in presence of two witnesses.

GEORGE G. GUY.

Witnesses:
JOHN H. MCELROY,
R. K. GUSTAFSON.