Sept. 2, 1930. J. H. DEPPELER 1,774,505

EXOTHERMIC HEATING UNIT

Filed Nov. 2, 1926

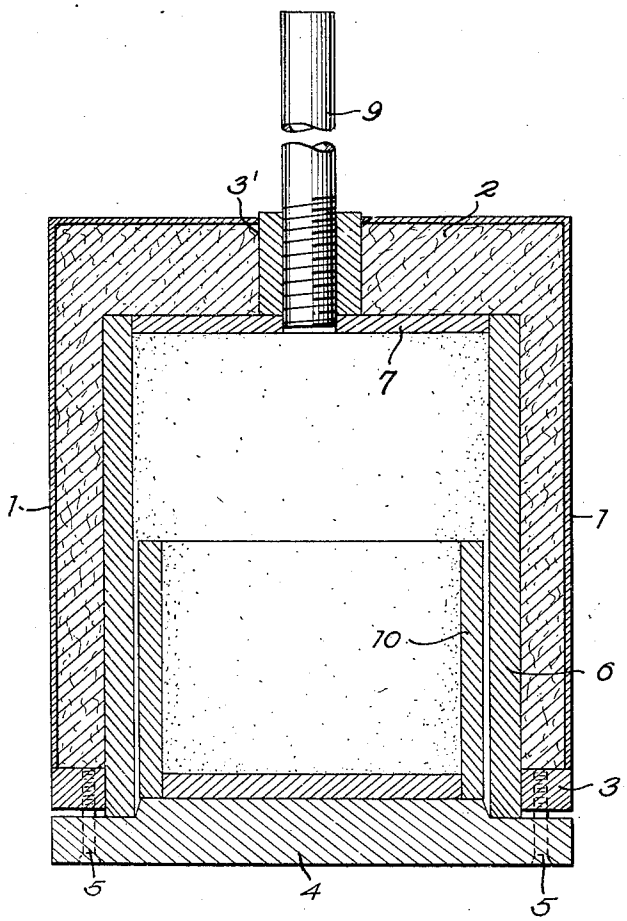

INVENTOR.

BY

ATTORNEY.

Patented Sept. 2, 1930 1,774,505

UNITED STATES PATENT OFFICE

JOHN H. DEPPELER, OF WEEHAWKEN, NEW JERSEY, ASSIGNOR TO THE HEAT RESEARCH AND SERVICE CORPORATION, OF WILMINGTON, DELAWARE, A CORPORATION OF DELAWARE

EXOTHERMIC HEATING UNIT

Application filed November 2, 1926. Serial No. 145,867.

The invention relates to heating units operated by the reaction of an exothermic mixture, said unit being in the form of a container for the mixture involving enclosing walls or elements, at least one of which elements is a good conductor of heat, so that the high degree of heat developed by the exothermic reaction may be readily transmitted through the heat conducting portion of the container or casing without materially impairing any part of the container, whereby the developed heat may be applied to the material to be treated therewith without releasing the products of the reaction other than the heat from the container.

The invention is illustrated in one of its adaptations in the accompanying drawing, in which:

The figure is a sectional elevation of a container adapted to receive a charge of exothermic mixture.

Among the various applications of heat produced by the reaction of exothermic mixtures, such as thermit and the like, are included the loosening or disintegration of ice masses, the melting of ice or other obstructions in pipes or conduits, pumps, hydrants, or the like, but, in all such applications, it has been customary to release the highly heated products of the exothermic reaction from a container in which the reaction is carried out, usually by melting or destroying all or part of the container by the heat generated. It has been found, however, that, in many instances, it is desirable to utilize the heat of the exothermic reaction, without liberating the permanent elements of the reaction in the form of molten metal and slag, as, for example, in forming holes in ice masses to receive thermal bombs, as explained in Patent No. 1,562,137, dated November 17, 1925, in removing meltable or fusible obstructions in pipes, pumps, hydrants and the like, and in many other relations in which the local application of a relatively high degree of heat is found necessary or desirable.

The present invention is designed to provide a container for an exothermic mixture, of such character that the enclosing walls or elements will not be materially impaired by the heat of the reaction of the exothermic mixture, but will nevertheless deliver the developed heat at the place or location desired. This result may be obtained by providing a metallic container having walls of such character and construction that they will not be materially impaired by the heat of the reaction, at least one of said walls or enclosing elements being made of a highly conductive metal, which will transmit and localize practically all of the heat of the reaction at the desired point.

In the application of the invention to relatively small units, such as would be required in thawing out frozen hydrants and melting obstructions in pipes and conduits, the container may conveniently take the form of an enclosing shell of iron or steel, the walls of which are thick enough to withstand the heat of reaction, so that the entire reaction may be completed and all of the heat expended by conduction through the walls of the container, without permitting any of the normally solid reaction products, such as molten metal and slag, to escape. In such cases, the container would generally be used but once, as the highly molten metal and slag would probably be either fused with or adhere to the interior walls of the container, so that it would be more expensive to remove these reaction products than it would be to provide a new container.

In another mode of application of the invention, as, for example, in forming holes in ice masses, or similar operations, it is both desirable and economical to construct a receptacle or container for the exothermic charge that will deliver the heat of the reaction in a definite direction, as, for example, through the bottom of the container, to effect a rapid melting of the ice or other body with which the container is in contact, to form the desired hole. A typical example of such a container is illustrated in the drawing, in which 1 represents an outer cup-like shell of relatively thin iron or steel, which is lined with a filling of heat insulating material 2 of any suitable character. Within the lined shell 1 is a second shell or casing comprising a tubular section 6, preferably of iron or steel,

having a top closure 7 which may be of like metal, the members 1 and 6 being connected by a metallic ring 3, preferably welded to each of said sections. The open end of the composite container, as thus constructed, is closed by a plate 4, preferably of a metal which is a good conductor of heat, such as copper, said plate being removably secured to the container by means of bolts 5 passing through holes formed adjacent the peripheral edge of the plate and engaging tapped openings in the ring 3, the top face of the plate forming a substantially tight joint with the lower rim of the tubular section 6. The interior walls or enclosing elements 6 and 7 and the closure 4 of the container are of sufficient thickness to withstand the heat of reaction of an exothermic mixture within the container, so that, if means are provided for removing the residual products of the reaction in the form of metal and slag, it will be entirely practicable to use the container repeatedly. This result is obtained by providing a cup 10, preferably made of iron or steel, which is removably insertable within the container and is supported by the bottom 4, when the latter is secured in place. The charge of the exothermic mixture is supplied to the container and, when said charge has been ignited and the reaction is completed, all of the residual products will be held within the cup 10 and may be removed from the container by first removing the bottom plate 4. When the reaction is taking place, however, the heat generated thereby will be conducted by the metallic walls of the cup 10, as well as the inner walls 6 of the container, to the highly conductive metal bottom 4, so that practically all of the heat of the reaction will be delivered by the bottom 4 directly to the material or article to be heated, and, in case the apparatus is used for forming holes in ice, the concentration of the heat at the area of contact between the bottom of the container and the ice will form a hole of the desired depth with great rapidity and certainty. In such cases, however, it is desirable to provide the container with a suitable vent, for although, theoretically, the exothermic reaction produces no internal pressure, it is almost inevitable that sufficient moisture is carried by the exothermic mixture or by the container to develop steam, which might disrupt the container, unless it be permitted to escape. To take care of these conditions, therefore, it is preferable to provide the container with a vent pipe 9, which is of a length sufficient to extend to the top of the hole in the melting ice, or other material, to prevent the entrance of water into the container and said vent pipe may be conveniently attached to the container by threading it into the ring or coupling 3'.

It will be understood that the particular form and structure of the heating unit, as illustrated, is merely exemplary and may be varied to meet special conditions, without departing from the invention, which is intended to provide a container capable of delivering all of the heat of the reaction to the material to be acted upon by such heat, without permitting the residual elements of the exothermic reaction to escape from the container.

What I claim is:

1. A heating device for melting ice masses comprising a shell including side, top and bottom walls of a character to withstand the heat from the reaction of exothermically reactive materials, the bottom wall being a good conductor of heat and removably secured to the side wall, an insulating sheath enclosing the top and side walls, and a removable refractory cup in the bottom of the shell adapted to receive and retain the residual products of the reaction.

2. A heating device for melting ice masses comprising a shell including side, top and bottom walls of a character to withstand the heat from the reaction of exothermically reactive materials, the bottom wall being a good conductor of heat and removably secured to the side wall, an insulating sheath enclosing the top and side walls, a removable refractory cup in the bottom of the shell adapted to receive and retain the residual products of the reaction, and a vent tube connected to the top of the shell.

In testimony whereof I affix my signature.

JOHN H. DEPPELER.