Aug. 22, 1967

RENTARO SASAKI

3,337,019

SHIFTING DEVICE FOR TELEPRINTERS

Filed Oct. 20, 1965

2 Sheets-Sheet 1

Fig. 1

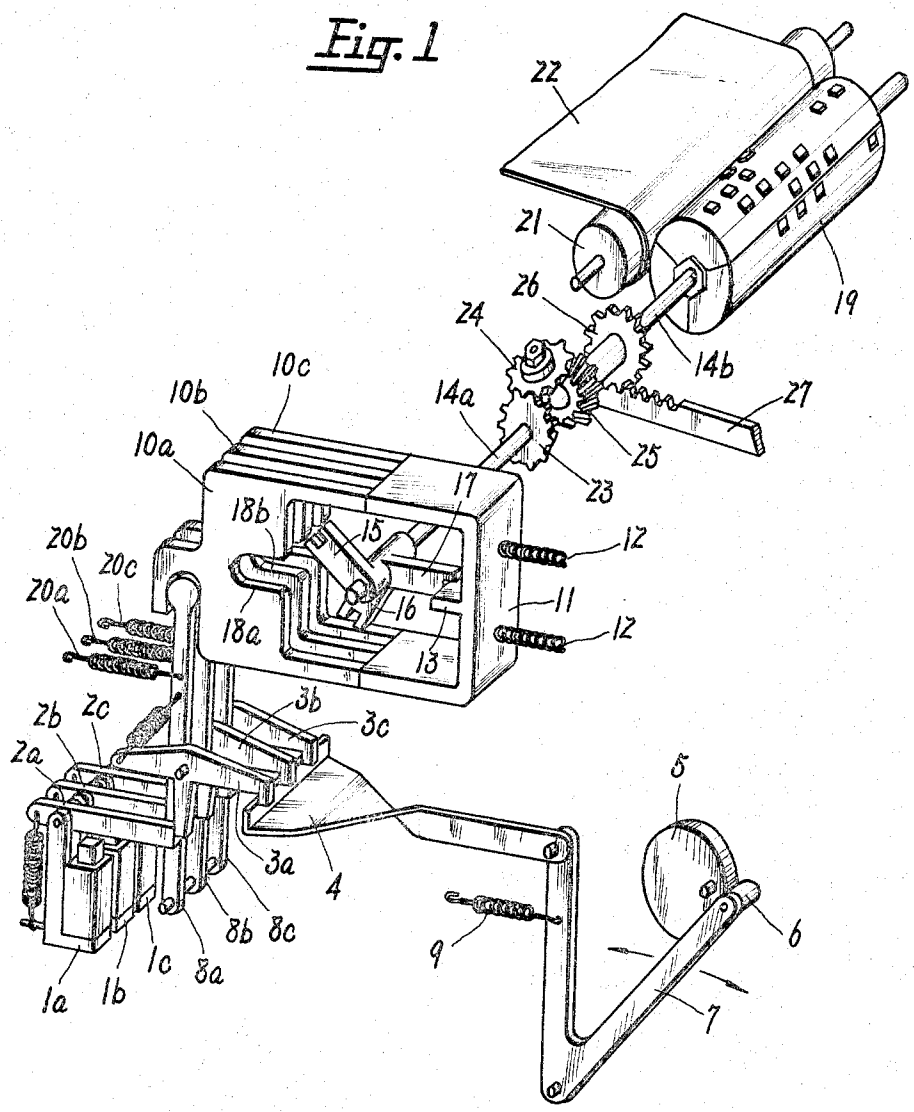

INVENTOR
RENTARO SASAKI

BY McGlew & Toren
ATTORNEYS

Aug. 22, 1967

RENTARO SASAKI

3,337,019

SHIFTING DEVICE FOR TELEPRINTERS

Filed Oct. 20, 1965

2 Sheets-Sheet 2

Fig. 2

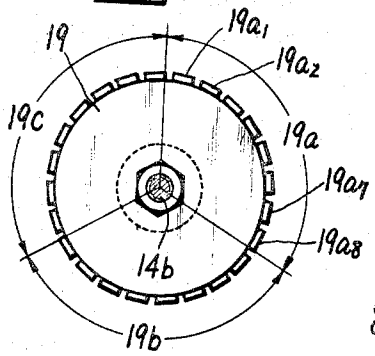

Fig. 3A

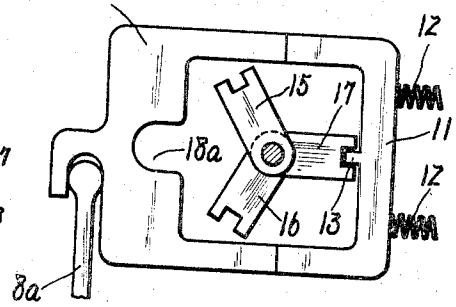

Fig. 3B

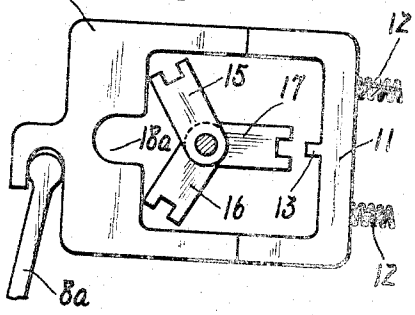

Fig. 3C

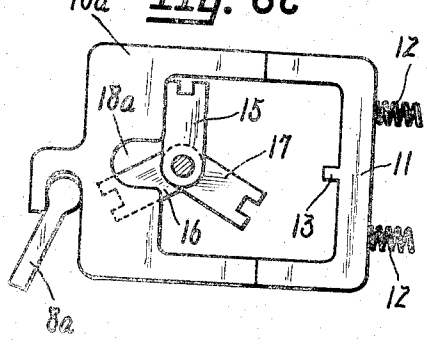

Fig. 3D

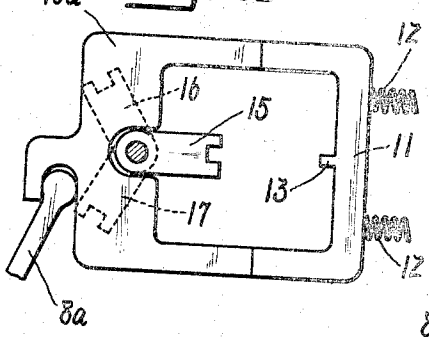

Fig. 3E

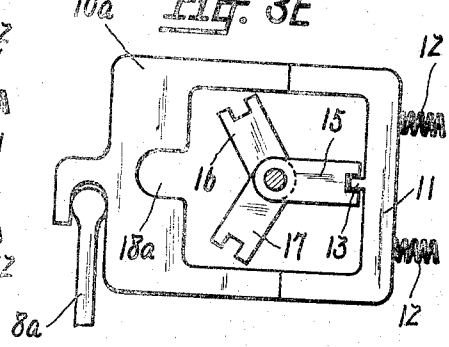

INVENTOR
RENTARO SASAKI

BY

McGlew & Toren
ATTORNEYS

United States Patent Office

3,337,019

Patented Aug. 22, 1967

1

3,337,019
SHIFTING DEVICE FOR TELEPRINTERS

Rentaro Sasaki, 2947-1 Ishiharacho, Takasaki, Gunma Prefecture, Japan

Filed Oct. 20, 1965, Ser. No. 498,657
Claims priority, application Japan, Dec. 11, 1964, 39/95,159
6 Claims. (Cl. 197—18)

This invention relates to a shifting device for the printing drums of teleprinters.

In accordance with the invention, a printing drum, carrying a plurality of types or character blocks, is divided circumferentially into a plurality of equal sectors. The types or character blocks are distributed among these several sectors. A selecting shaft is provided to effect rotation of the printing drum whereby the types on a selected sector of the drum may be brought into operative printing position. This selector shaft carries a plurality or radially extending arms equal in number to the number of printing drum sectors, and these radially extending arms are at equal angular distances from each other or, in other words, are uniformly spaced angularly around the selecting shaft.

Driving means are provided to rotate the shaft through engagement with one of the mentioned arms, and this rotation of the shaft brings the driven arm into a position whereby, upon retraction of the driving means, the selected arm may be locked to lock the selecting shaft against movement. In turn, this driving adjusts the printing drum to the proper angular position to bring the selected sector, and the type thereon, into operative printing position. Additional means, preferably including differential or planetary gearing means, are provided for further rotating the drum to bring into the operative printing position selected type within the selected printing drum sector.

An object of the present invention is to provide a shifting device for a teleprinter printing drum which can easily adapt to variations in the number of selecting positions.

Another object of the present invention is to provide a shifting device for a teleprinter which is simple in the structure.

In the accompanying drawings;

FIGURE 1 is a perspective view of a shifting device embodying the present invention.

FIG. 2 is an end elevation view of the type drum shown in FIG. 1; and

FIGS. 3A through 3E are elevation views of the arm driving and locking means illustrating different stages of the selecting operation.

The accompanying drawings show a device according to the present invention as applied to a three-step shifting mechanism. Referring to the drawings, three selector magnets **1***a*, **1***b* and **1***c* are provided, each having a pivoted armature **2***a*, **2***b* and **2***c*, respectively, associated therewith. These pivoted armatures act as latches which, when the selector magnets are not energized, maintain selector pawls **3***a*, **3***b* and **3***c* in the position shown in the drawing. Whenever a selector magnet **1***a*, **1***b* or **1***c* is energized, its armature **2***a*, **2***b* or **2***c*, respectively, is drawn down to release the associated pawl **3***a*, **3***b* or **3***c*, respectively. The released pawl is then in a position to be engaged by a draw bar **4** having a bent end engageable with the down turned end of the released pawl. Draw bar **4** has its other end pivotally connected to a V-shaped lever **7** which carries a roller **6** engaged with a cam **5**, roller **6** being biased into engagement with cam **5** by a tension spring **9**. When cam **5** is rotated through one revolution, arm **7** is first swung clockwise and then swung counterclockwise. This draws the released pawl to the right, and then the pawl returns to the left under the influence of a tension spring secured between an end thereof and an associated pivoted lever **8***a*, **8***b* or **8***c*. Consequently, the pivoted lever **8***a*, **8***b* or **8***c* operatively associated with the released pawl is first swung clockwise and then returned counterclockwise under the influence of tension springs **20***a*, **20***b* and **20***c* each associated with one of the pivoted levers **8***a*, **8***b* and **8***c*, respectively.

2

There is provided a bank of selecting forks **10***a*, **10***b* and **10***c* which are equal in number to the number of selector magnets **1***a*, **1***b* and **1***c*, and each selecting fork has operatively engaged therewith the upper end of one of the selecting levers so that, upon clockwise movement of the associated selecting lever **8***a*, **8***b* or **8***c*, the associated selecting fork **10***a*, **10***b* or **10***c*, respectively, is moved to the right and, when the associated selecting lever is drawn back to the left by the tension springs **20***a*, **20***b* or **20***c*, the corresponding selecting fork is also withdrawn.

The three selecting forks, corresponding in number to the selector magnets, are substantially rectangular forks including a pair of legs extending at right angles to a base. The base of each of the selector forks is formed with an elongated recess, such as the recesses **18***a* and **18***b*, and each of these recesses is arranged to receive, under certain circumstances, the major portion of a selector arm **15**, **16** or **17** as will be described more fully hereinafter. The legs of the selector forks are engaged with, or abut, the ends of the legs of a substantially rectangular-shaped channel locking slide **11** which is biased to the left, as indicated in the drawings, by compression springs **12**, so that locking slide **11** will follow the movement of any selector fork which is displaced by its associated selector lever. The base of locking slide **11** has a rectangular finger extending centrally from its inner end and substantially aligned with the recesses **18***a*, **18***b*, etc.

A shift selecting shaft **14***a* extends into the open rectangular area defined by the bank of selector levers and the locking slide, and the end of shaft **14***a* extending into this open rectangular area has secured thereto the three selector arms **15**, **16** and **17**. These arms extend radially from the shift selecting shaft **14***a* and are arranged at uniform angular spacings around the shaft, the angular spacing, in the illustrated embodiment, being 120° inasmuch as there are three selector arms each corresponding to one of three selecting positions as determined by the selector magnets **1***a*, **1***b* and **1***c*. Each selector arm **15**, **16** or **17** is substantially coplanar with a respective selector fork **10***a*, **10***b* or **10***c*, and each selector arm has its outer end formed with a rectangular notch which is arranged to have a conforming engagement with the rectangular finger **13** on the slide **11**. The opposite end of shaft **14***a* carries a bevel gear **23**, and shaft **14***a* is coaxial with the main portion of a selecting shaft **14***b* whose end adjacent shaft **14***a* is bent at right angles and carries a bevel gear **24** meshing with the bevel gear **23**. Bevel gear **24** furthermore meshes with a bevel gear **25** fixed to shaft **14***b*. The shaft **14***b* also carries a pinion **26** which meshes with a rack **27**.

Shaft **14***b* is secured to rotate with a type drum **19** which, as shown in FIG. 2, includes three equal shift sectors **19***a*, **19***b* and **19***c* corresponding to the selector arms **15**, **16** and **17**, respectively. The type or character blocks on drum **19** is distributed between the three equal sectors thereof. Drum **19** is associated with a cylindrical platen **21** which feeds paper **22** into a position for printing cooperation with drum **19**.

FIG. 1 illustrates the position of the parts wherein the type sector **19***c* of drum **19** has been selected and is in the printing position with respect to platen **21** and

aper **22**. In this case, the corresponding selector arm **7** has its rectangular recess engaged with the rectangular nger of slide **11**. Starting from this position, it will now e explained how the type sector **19***a* is selected to be perative.

To select type sector **19***a*, selector electromagnet **1***a* ; energized drawing down its armature **2***a* and releasing he associated pawl **3***a* to pivot clockwise. Pawl **3***a* may hus be engaged by draw bar **4**. Cam **5** is now rotated nd, during such rotation, draw bar **4** is pulled to the ight by clockwise movement of lever **7** effected by cam ollower **6** engaged with cam **5**. This swings selector ever **8***a* clockwise moving selector fork **10***a* to the right nd displacing locking slide **11** to the right to release inger **17** from finger **13**, so that shaft **14***a* can be rotated. As selector fork **10***a* moves to the right from the position hown in FIG. 3A to that shown in FIG. 3B, it engages inger **15** and, as further shown in FIGS. 3C and 3D, it otates finger **15**, and thus shaft **14***a*, clockwise with the ub portion of finger **15** eventually entering the recess **18***a* of selector fork **10***a*. The consequent rotation of shaft **14***a* rotates bevel gear **23** which, through planetary bevel gear **24**, rotates bevel gear **25** and thus shaft **14***b* to rotate drum **19** to a position wherein the type sector **19***a* is in operative printing position.

Selector magnet **1***a* is then deenergized, so that pawl **3***a* is disengaged from draw bar **44** and is returned, together with lever **8***a*, to the left under the influence of tension spring **20***a*. Selecting fork **10***a* and locking slide **11** are also returned to the position shown in FIG. 1 and which corresponds to the position shown in FIG. 3E. During this return, finger **13** of slide **11** engages in the outwardly opening rectangular notch in the free end of selector arm **15**, thus locking shaft **14***a* in its angularly adjusted position.

The next step is the selection of the particular types **19**a_1–**19**a_8 in the shift sector **19***a*. As just-mentioned, the shift sector has already been selected and it is now necessary to select the particular types within the shift sector. To effect this latter, a conventional type selecting mechanism, which has not been illustrated, displaces rack **27** and this rotates pinion **26**. The conjoint rotation of shaft **14***b* and drum **19** relative to shaft **14***a* is made possible due to the planetary pinion **24** engaged between bevel gears **23** and **25**. Thus, the "fine" selection of the type is made. In effect, the total angular displacement of shaft **14***b* and drum **19** is a combination of the displacement of shaft **14***a* through operation of the selector fork **10***a* and selector finger **15** and the additional rotation of shaft **14***b* effected by movement of rack **27** engaged with pinion **26**.

The shifting device according to the present invention is not limited to the embodiment described above. Thus, for example, by fitting it to a platen shaft, a quick fixed line shifting operation can be also attained.

What is claimed is:

1. A shifting device for a teleprinter comprising, in combination, a type drum having a type carrying surface divided circumferentially into a plurality of zones of equal angular extent, with the type being distributed among said zones; shaft means operable to displace said drum angularly to bring a selected zone into an operative printing position; a plurality of selector arms, equal in number to said zones, extending radially from said shaft means at equal angular spacings corresponding to the angular extents of said zones; and each coordinated with a respective zone; a plurality of selector forks reciprocable transversely of said shaft means and each aligned with and at least partially embracing a respective selector arm; locking slide means disposed in opposition to said selector forks and relative to said shaft means; means biasing said locking slide means towards said shaft means and into locking engagement with the selector arm then in the latching position; each selector fork, when moved towards said shaft means, displacing said locking slide means out of said locking engagement and engaging its associated selector arm and rotating it, together with said shaft means, to a latching position in which the associated zone is in said operative printing position; and selector means operable, when activated, to move a selected selector fork towards said shaft means and then to retract it; each selector fork, upon such retraction, releasing said locking slide means to move into such locking engagement.

2. A shifting device for a teleprinter, as claimed in claim **1**, including type selector means operatively associated with said shaft means and operable to effect a further angular displacement of said drum within the angular extent of the selected zone, to move a selected type within the selected zone into the operative printing position.

3. A shifting device for a teleprinter, as claimed in claim **2**, in which said shaft means includes a first shaft having said selector arms extending radially therefrom and a second shaft, coaxial with said first shaft, and secured to said drum; differential gearing interconnecting said first and second shafts for conjoint rotation responsive to rotation of a selector arm by the associated selector fork; said type selector means being operatively connected to said second shaft to displace the same angularly relative to said first shaft, said differential gearing providing for such relative angular displacement when said first shaft is locked by engagement of said locking slide means with the selector arm then in the latching position.

4. A shifting device for a teleprinter, as claimed in claim **3**, in which said first and second shafts have ends in opposition, the opposing end of each shaft carrying a bevel gear facing the bevel gear on the other shaft; said second shaft having its end bent at right angles to its major axis to extend between said bevel gears; and a third bevel gear rotatably mounted on said bent end and engaged with both of said first mentioned bevel gears; said bevel gears constituting said differential gearing.

5. A shifting device for a teleprinter, as claimed in claim **1**, in which each selector fork has a substantially rectangular U-shape including a pair of arms extending at right angles from a base; said base having an elongated recess formed therein in alignment with said shaft means and conformingly receiving the associated selector arm when the latter is in said latching position.

6. A shifting device for a teleprinter, as claimed in claim **5**, in which said locking slide means comprises a substantially rectangular U-shape locking slide including a pair of arms extending at right angles to a base, the arms being engageable with the arms of said selector forks; said slide including a substantially rectangular finger extending centrally from its base towards said shaft means; each of said selector arms being formed with a substantially rectangular notch in its free end and engageable with said substantially rectangular finger in the latching position of the selector arm.

References Cited

UNITED STATES PATENTS

239,823	4/1881	McKittrick	197—18
667,433	2/1901	Ferguson	197—18 X
920,651	4/1909	Richards	197—18
2,023,949	12/1935	Cammen	198—34
2,365,913	12/1944	Stenfors	197—18
3,144,820	8/1964	Wales	197—18 X

OTHER REFERENCES

Article entitled "Keyboard and Print Wheel Entry," by C. A. Foot in the IBM Technical Disclosure Bulletin, volume 5, No. 2, July 1962. Page 31 relied upon.

WILLIAM B. PENN, *Primary Examiner.*

ROBERT E. PULFREY, *Examiner.*

E. S. BURR, *Assistant Examiner.*