Office de la Propriété Intellectuelle du Canada
Un organisme d'Industrie Canada

Canadian Intellectual Property Office
An agency of Industry Canada

CA 2431350 A1 2004/12/06

(21) 2 431 350

(12) DEMANDE DE BREVET CANADIEN
CANADIAN PATENT APPLICATION

(13) A1

(22) Date de dépôt/Filing Date: 2003/06/06

(41) Mise à la disp. pub./Open to Public Insp.: 2004/12/06

(51) Cl.Int.^{7}/Int.Cl.^{7} F16G 11/12, D07B 9/00

(71) Demandeur/Applicant:
WIRE ROPE INDUSTRIES LTD./INDUSTRIES DE CABLES D'ACIER LTEE, CA

(72) Inventeurs/Inventors:
LANDRY, FREDERIC, CA;
GAGNON, PAUL-ANDRE, CA

(74) Agent: PRIMAK & CO.

(54) Titre : RACCORD DE CABLE METALLIQUE
(54) Title: WIRE ROPE INSTALLATION CONNECTOR

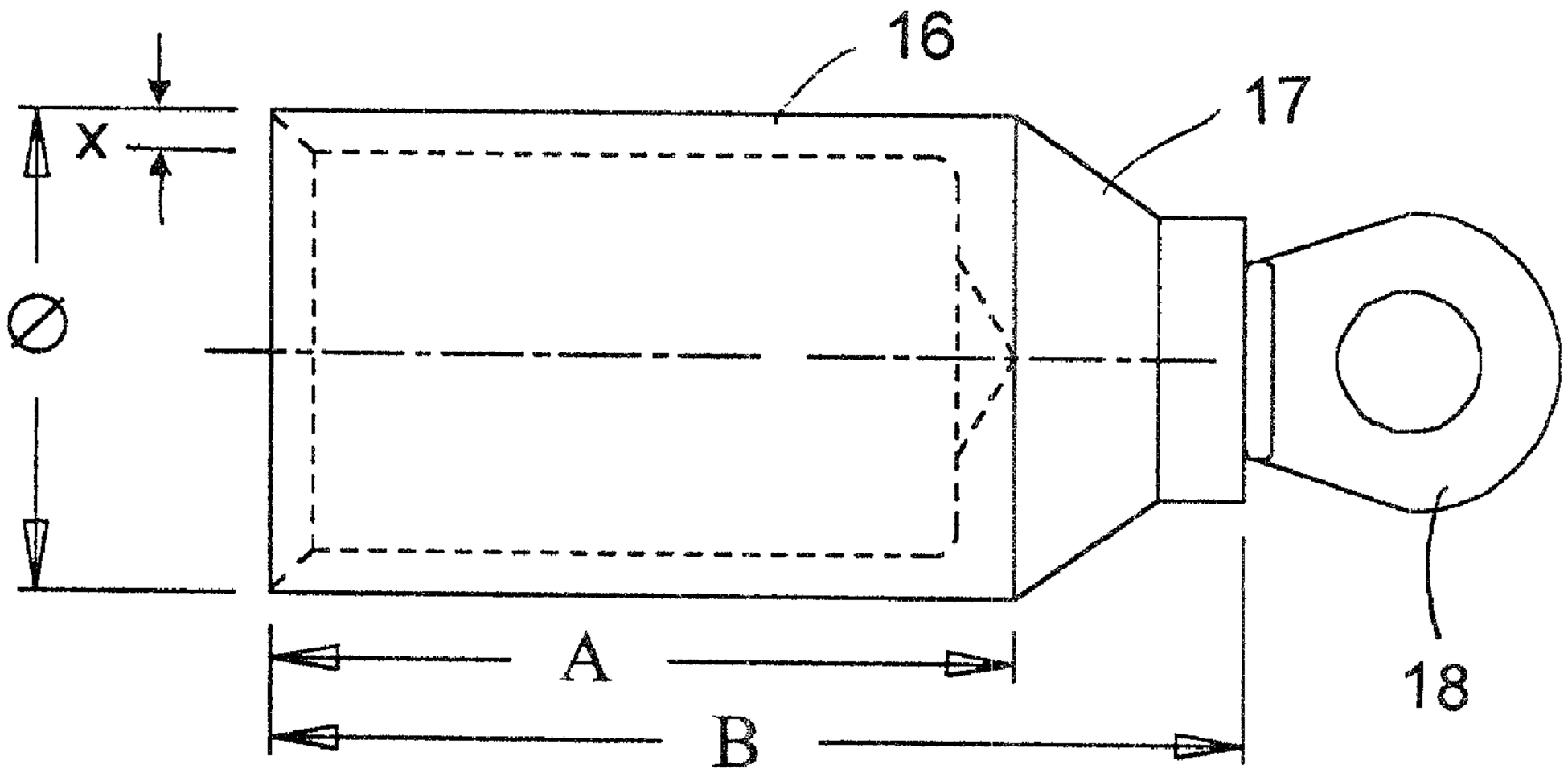

(57) Abrégé/Abstract:
A wire rope installation connector has a cylindrical cap, called "button" that closely fits over an end of a wire rope and covers the same when the end of the rope is inserted into it. The thickness of this button is such that when it is pressed over the end of the rope, it will produce a grip onto the rope suitable for rope installation purposes, and further the diameter of the after-pressed button will not exceed the diameter of the rope by more than 10%. The outer end of the button extends beyond the end of the rope which the button covers. This outer end has an eye in it or connected to it, such as a pad eye. The lateral dimension of the eye does not exceed the after-pressed diameter of the button and the eye section has a strength that is below the one of the breaking load of the rope. The invention also comprises a wire rope provided with such installation connector at one or both ends and a method of mounting such installation connector on one or both ends of the wire rope.

ABSTRACT OF THE DISCLOSURE

A wire rope installation connector has a cylindrical cap, called "button" that closely fits over an end of a wire rope and covers the same when the end of the rope is inserted into it. The thickness of this button is such that when it is pressed over the end of the rope, it will produce a grip onto the rope suitable for rope installation purposes, and further the diameter of the after-pressed button will not exceed the diameter of the rope by more than 10%. The outer end of the button extends beyond the end of the rope which the button covers. This outer end has an eye in it or connected to it, such as a pad eye. The lateral dimension of the eye does not exceed the after-pressed diameter of the button and the eye section has a strength that is below the one of the breaking load of the rope. The invention also comprises a wire rope provided with such installation connector at one or both ends and a method of mounting such installation connector on one or both ends of the wire rope.

WIRE ROPE INSTALLATION CONNECTOR

BACKGROUND OF THE INVENTION

1. Field of the Invention

This invention relates to wire rope installation connectors which are connected to one or both ends of a wire rope in order to help installation of the rope when it is wound on a drum or the like. More specifically, such connectors are not designed to support the full load carried by the rope, but are provided only for installation and handling purposes and will always break before the rope.

2. Description of the Prior Art

Current dragline hoist ropes are supplied by rope manufacturers with welded pad eyes at each end. Such pad eyes constitute installation connectors of the wire rope since they are used only for the installation of the rope on the machine. As the rope has to pass through a wedge socket and pulleys to be wound on a drum, it is important that the end diameter of the pad eye welding should not exceed the nominal rope diameter or if it does exceed the nominal diameter, it should not exceed it by more than 10%. Such pad eyes are not intended to support the full load of the rope and are provided only to assist with the installation of the rope.

Although such pad eyes and similar installation connectors welded at extremities of a wire rope to help pulling the rope during its installation appear to be simple products, they are in fact very labour intensive to install. First, the rope end is heated red hot to join all strands into one unit. The second step is a cooling period which lasts from 10 to 25 minutes. Finally, a pad eye is welded to the rope end with an electric welder. The whole operation takes around 45 minutes to perform and is, therefore, labour intensive and expensive.

There are also known steel swage attachments to a wire rope as disclosed for example, in U.S. Patent No. 5,152,630, which may be in the form of a swage socket or a heavy wall sleeve swaged to the end of a wire rope to a specified after-swage diameter. Such swaged terminations are intended to support the full load carried by the rope and have far larger dimensions at the end of the rope than the pad eye or similar installation connectors discussed above.

Other than the steel swage attachments referred to above, there are also known in the art terminations made of wire eyebolts that may be used as an anchor bolt in mining operations. They are disclosed, for example, in British Patent No. 1,190,157. Here, the eye of the eyebolt is cold formed from mild steel as a loop the ends of which are welded to a ferrule that is clamped to the end of a wire rope. A suitable epoxy resin adhesive may be inserted into the ferrule prior to the clamping operation. It should be noted that both the diameter of the upper portion of the ferrule which extends beyond the end of the rope and the size of the loop or eye welded thereto are much larger than would be acceptable in a wire rope installation connector, such as a pad eye described above.

There is consequently a need for a wire rope installation connector that would be less labour intensive to make and thus less expensive than the welded pad eye presently used.

OBJECTS AND SUMMARY OF THE INVENTION

It is an object of the present invention to provide a wire rope installation connector that would retain the effect of presently used pad eyes, but would be quick and easy to install.

Other objects and advantages of the present invention will be apparent from

the following description thereof.

In essence, the present invention provides a wire rope installation connector comprising a cylindrical cap made of a suitable metal or alloy, such as steel, aluminum or the like, which in the trade is called "a button", at the outer end of which there is provided an eye or a ring the lateral dimensions of which do not extend beyond the diameter of the button; said button being adapted to receive an extremity of a wire rope within its cylindrical portion which has a slightly greater diameter than that of the rope. The button has such thickness and size upon being compressed onto the rope that its diameter, after compression, does not exceed that of the rope by more than 10%, and preferably not more than about 5%, while exerting sufficient grip onto the rope for installation purposes.

The eye or ring at the end of the button may be provided in many ways. For example, a pad eye may be integrated with the button by welding it onto the outer end of the button. Moreover, a bent rod or a ring may be welded to the outer end of the button to constitute the eye. The entire button and eye component may be machined in one piece. Also, a ring with a threaded shaft may be screwed to the outer portion of the button or a ring having a shank section may be pressed into such outer portion of the button that extends beyond the end of the rope and is made of solid metal. Normally, the eye provided at the outer end of the button will break first under load before the pressed button slips away from the rope.

A wire rope having the installation connector of the present invention at one or both ends thereof is also part of the invention as is the method of providing the wire rope with such installation connector.

BRIEF DESCRIPTION OF THE DRAWINGS

Preferred embodiments of the invention will now be described with reference to the appended drawings in which:

Fig. 1 shows a pad eye welded to the extremity of a wire rope as is known in the prior art;

Fig. 2 shows a button with an integrated pad eye in accordance with the present invention;

Fig. 3 shows the placement of the cylindrical portion of the button illustrated in Fig. 2 over an extremity of a wire rope prior to compression of the button onto the wire rope;

Fig. 4 shows the button with integrated pad eye after compression on the end of a wire rope;

Fig. 5 shows a side view of the design features of the button with an integrated pad eye in accordance with the present invention;

Fig. 6 shows a side view of the design features of a button similar to that of Fig. 5, but where the pad eye is replaced by a ring with a threaded shaft screwed into the outer part of the button.

Fig. 7 shows a side view of another design similar to that of Fig. 6, but where the ring has a shank section pressed into the outer part of the button;

Fig. 8 shows a side view of a further design where the button has an outer portion with an opening in it forming the eye, the component having been machined in one piece;

Fig. 9 shows a side view of a further design where a ring is welded onto the outer end of the button; and

Fig. 10 shows a side view of a further design where a bent rod is welded by its ends onto the outer end of the button.

DETAILED DESCRIPTION OF THE INVENTION

In the drawings, the same elements are identified by the same reference number.

Fig. 1 illustrates how a pad eye 14 is presently welded onto the end of a wire rope 12. The pad eye 14 has a small base 13 which is welded onto the extremity of the rope 12. As already previously mentioned, this procedure is very labour intensive.

In accordance with one embodiment of the present invention, shown in Fig. 2, the pad eye of the prior art is replaced by a cylindrical button 16 with an integrated pad eye 18 welded to the outer end 17 thereof. The outer end 17 of the button 16 has a generally conical configuration to facilitate welding of the pad eye 18 thereonto. It should be noted that the quality of the weld in this case is much better since the pad eye 18 is welded on a clean metal surface of the outer end 17 of the button 16, rather than onto the end of a lubricated rope, as in the case of the prior art shown in Fig. 1.

Fig. 3 illustrates the insertion of an end of a wire rope 12 into the cylindrical portion of the button 16 with integrated pad eye 18 at its outer end. The inserted end of the rope may be coated with an adhesive 20, although this is not an essential requirement of the invention. After such insertion, the button 16 is compressed on the rope 12 as shown in Fig. 4. The compression is such that the after pressed diameter of the button 16 does not exceed the diameter of rope 12 by more than 10% and preferably not more than about 5%, as represented by distance X in Figs. 4 and 5. As previously mentioned, the button 16 is made of a metal or alloy. The thickness of the metal should be such that it will not break or crack when pressed onto the wire rope

12, but at the same time one should be able to compress it to the level that its after-pressed diameter will not exceed the diameter of the rope by more than 10% and preferably not more than about 5%. Thicknesses of between about 0.5 and 1 cm are usually suitable. To avoid cracks during compression, it is preferred to use a soft metal, such as 1018 steel with a maximum hardness of 85 HRB.

Fig. 5 shows the actual design drawing of the after-pressed button 16. In this example, a 3¼ inch rope having a nominal diameter of 3.332 inches (8.33 cm) was provided with a button made of mild steel having a thickness of ⅜" (9.375 mm). The cylindrical part of the button 16 in after pressed state had a diameter Ø of 3½ inches (8.75 cm). The length A of the cylindrical part of the button was 5¾ inches (14.375 cm) and the total length B, including the generally conical part 17 was 7½ inches (18.75 cm). Thus, in this case, the after pressed diameter of the part A of the button exceeded that of the rope by 0.168 inch (4.22 mm) or 5.04% which is in the preferred range. The pad eye 18 was welded to the generally conical portion 17 of the button 16 and its size was such as not to extend laterally beyond the diameter Ø of the button 16. It should be noted that ropes of different diameters may require buttons that will use different thicknesses and lengths as well as configurations of the button.

Fig. 6 illustrates an alternative embodiment of the invention in which a button 16 is provided with a solid outer portion instead of the conical part 17 shown in Fig. 5. Then, in lieu of the pad eye, a ring 22 is used with a threaded shaft 24 which is screwed into the solid outer portion of the button 16 which has a suitable recess 23 for that purpose. In this manner, welding of a pad eye is entirely avoided.

Fig. 7 illustrates a still further embodiment similar to that of Fig. 6, but where the ring 22 has a shank section 26 which is pressed into a recess 26, rather than being

screwed as in Fig. 6.

Fig. 8 illustrates another embodiment of the invention in which the entire unit of the button 16 is machined so as to incorporate an opening or eye 28 in its outer portion. In this manner, no separate pad eye or ring need be provided.

Fig. 9 illustrates a further embodiment in which a ring 30 is welded at 31 to the outer end of the button 16. In this case, the outer portion of the button 16 need not be conical as in the case of the embodiment shown in Fig. 5. This simplifies the machining of button 16.

Finally, Fig. 10 shows another embodiment of the invention where a curved rod 32 is welded by its two extremities 34, 36 to the outer end of the button 16 to provide the required loop or eye for installation purposes of the wire rope.

In all the above cases, the loop or eye or ring provided as part of the button or connected in a suitable manner to the outer end of the button has a lateral dimension which does not exceed the diameter Ø of the button in pressed condition, so that it would not hinder penetration through a wedge socket or a pulley during installation of the rope.

It should further be noted that in a preferred embodiment of the invention, the design of the welded pad eye or ring, or of an eye or ring connected to the button by other means than welding should be such that the eye or ring will break before the pressed part of the button can slip away under load. Generally, the pad eye or other "eye"provided in accordance with the present invention on the button has essentially the same strength as a regular pad eye when welded directly at the end of the rope and behaves in essentially the same manner as a regular pad eye of the prior art welded on the end of the rope as shown in Fig. 1. The installation connector of the present

invention has, however, many advantages over the regular pad eye, such as a more rapid and safer assembly manufacturing process which increases radically the manufacturing capacity. The time to install dies on a press and to press the button on the rope is about 10 minutes rather than 45 minutes in the case of the regular pad eye. Also, welding onto the end of a lubricated rope is avoided, resulting in an improved weld or other connection.

The invention is not limited to the specific embodiments described above and illustrated in the appended drawings and various modifications obvious to those skilled in the art can be made therein without departing from the invention and the following claims.

CLAIMS

1. A wire rope installation connector comprising a button made of metal and having a cylindrical portion into which an end of a wire rope is adapted to be inserted, the diameter of said cylindrical portion of the button being slightly greater than that of the wire rope and the thickness of said cylindrical portion of the button being such that upon compression of the cylindrical portion of the button onto the wire rope, the diameter of the compressed button does not exceed the diameter of the rope by more than 10%, said compressed button exerting a sufficient grip onto the wire rope for wire rope installation purposes, and said button having an eye provided in or connected to its outer portion which extends beyond the end of the wire rope, said eye having a lateral dimension that is no greater than the diameter of the button after its compression on the rope.

2. A wire rope installation connector according to claim 1, in which the button is made of mild steel.

3. A wire rope installation connector according to claim 1, in which the button is made of aluminum or its alloys.

4. A wire rope installation connector according to claims 1 or 2, in which the thickness of the cylindrical portion of the button is between 0.5 and 1 cm.

5. A wire rope installation connector according to any one of claims 1 to 4, in which the diameter of the compressed button does not exceed that of the rope by more than about 5%.

6. A wire rope installation connector according to any one of claims 1 to 5, in which the outer portion of the button has a generally conical shape and at the end of it a pad eye is welded prior to mounting the button onto the wire rope, to form the eye

connected to said button.

7. A wire rope installation connector according to any one of claims 1 to 5, in which the outer portion of the button is made of solid metal and has a recess into which a ring with a threaded shaft is screwed to form the eye connected to said button.

8. A wire rope installation connector according to any one of claims 1 to 5, in which the outer portion of the button is made of solid metal and has a recess into which a shank section of a ring is pressed to form the eye connected to said button.

9. A wire rope installation connector according to any one of claims 1 to 5, in which the outer portion of the button is made of solid metal in which an opening is pierced to form the eye in said button.

10. A wire rope installation connector according to any one of claims 1 to 5, in which a ring is welded to the end surface of the outer portion of the button to form the eye connected to said button.

11. A wire rope installation connector according to any one of claims 1 to 5, in which a bent rod is welded by its extremities to the end surface of the outer portion of the button to form the eye connected to said button.

12. A wire rope installation connector according to any one of claims 1 to 11, so designed that the eye will break under load before the button will slip away from the end of the rope.

13. A wire rope having an installation connector at one or both ends thereof, said connector being as defined in any one of claims 1 to 12.

14. A method of providing a wire rope with an installation connector, which comprises inserting an end of a wire rope into a cylindrical portion of a button of a

connector as set out in any one of claims 1 to 12, and compressing said cylindrical portion onto the wire rope to achieve a predetermined holding strength suitable for wire rope installation purposes.

15. A method according to claim 14, in which the compression is such that the eye will break first under load, before the pressed cylindrical part of the button will slip away from the end of the rope, the eye being designed so as to break before the rope and so as to have a breaking load which is only suitable to resist the rope installation loads.

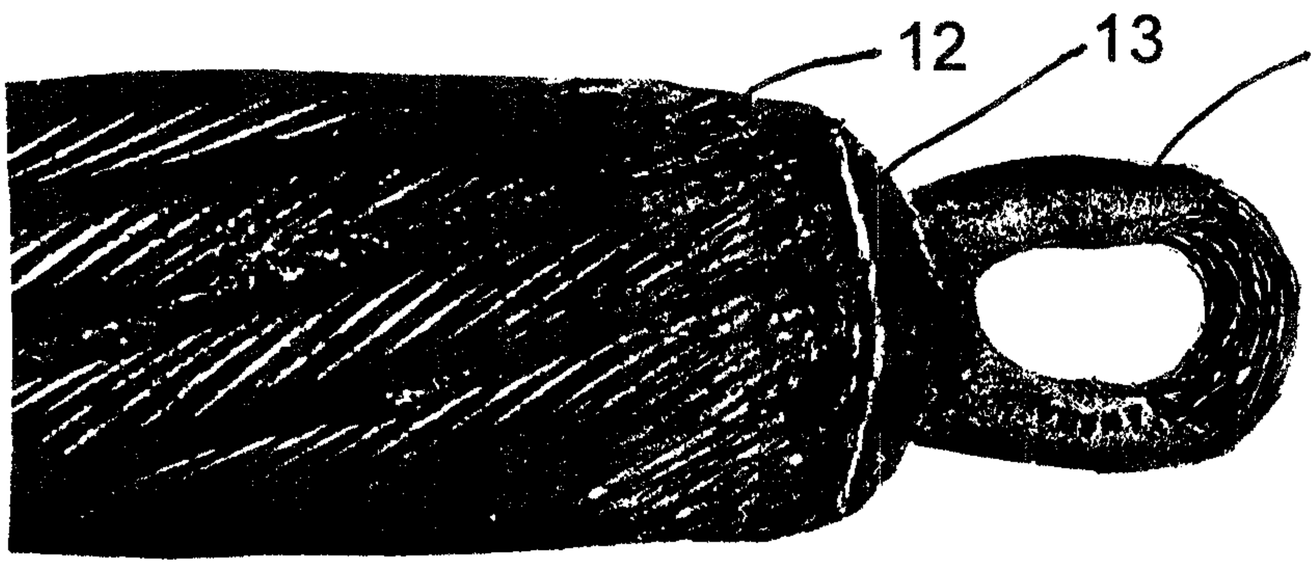

Fig. 1 (Prior Art)

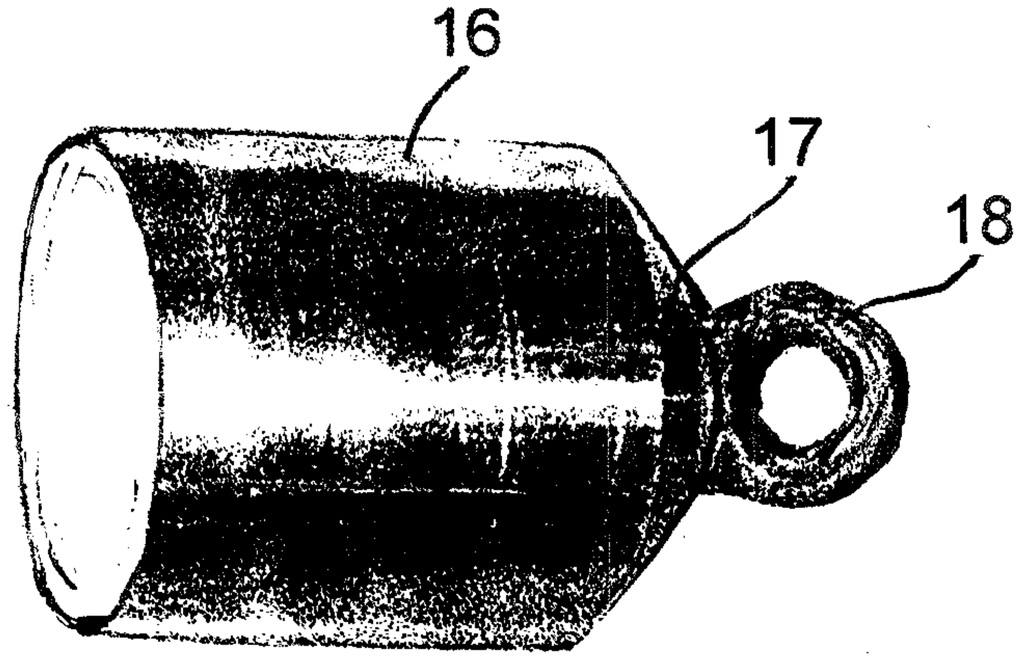

Fig. 2

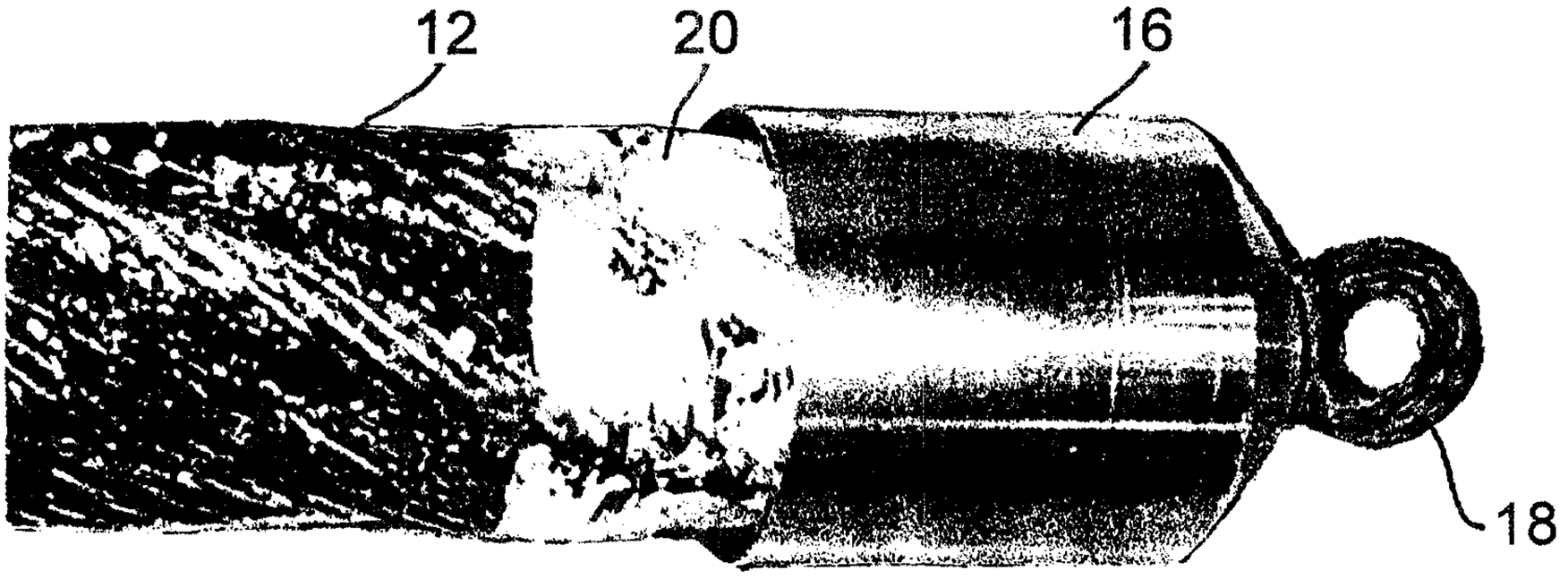

Fig. 3

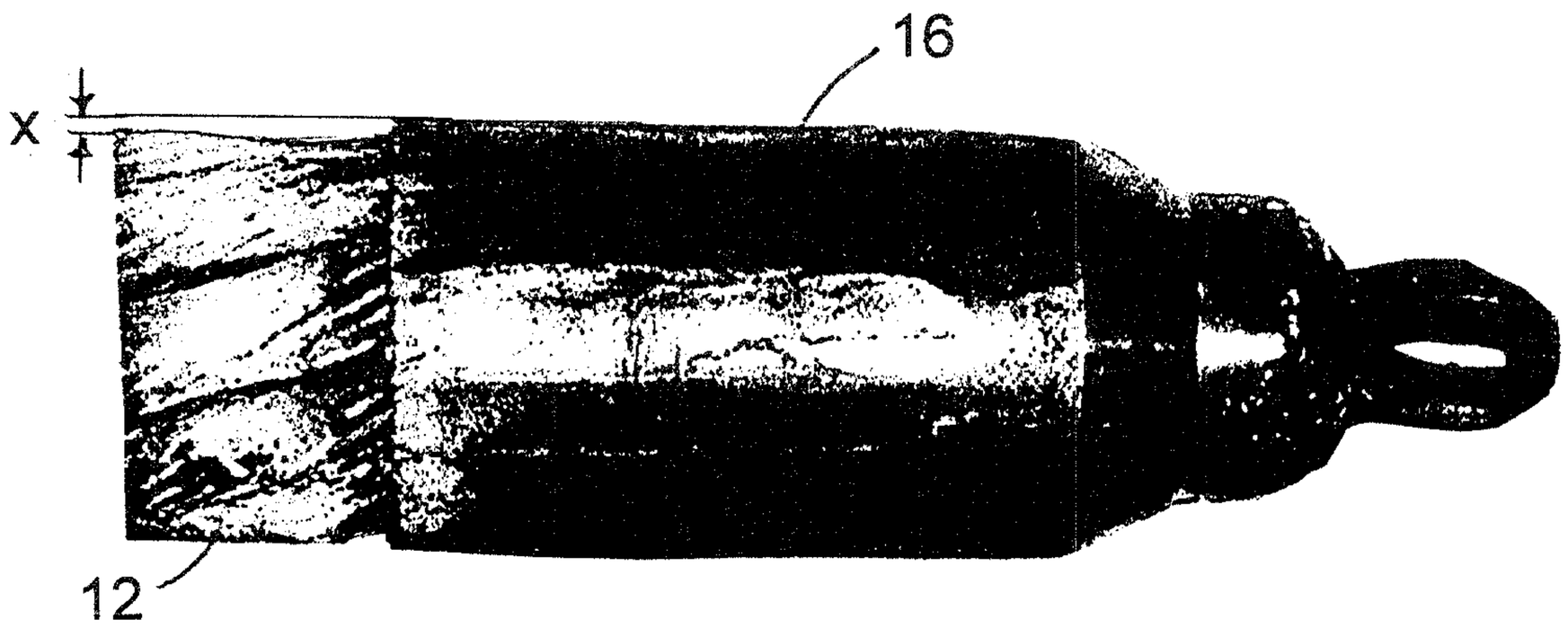

Fig. 4

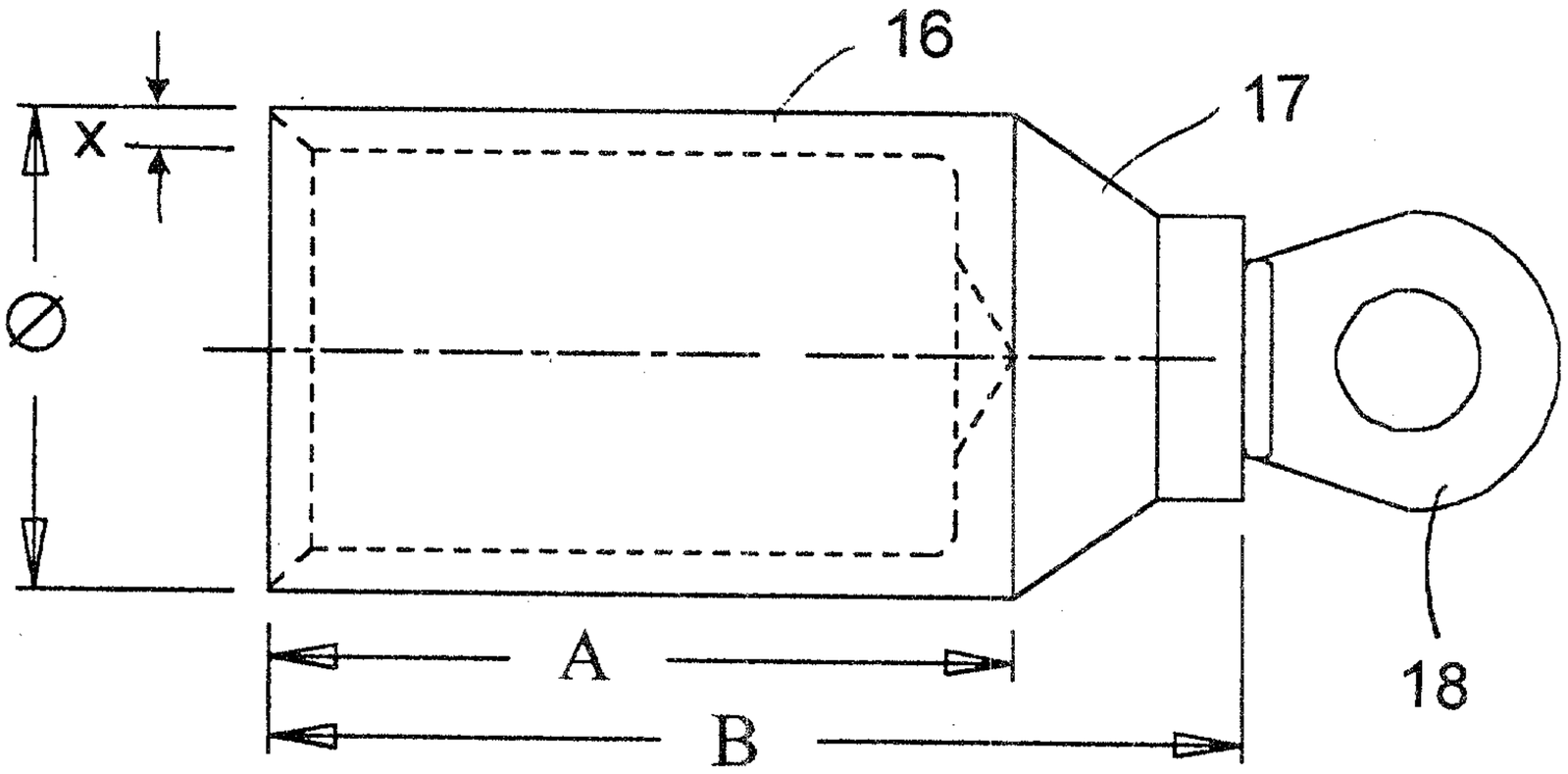

Fig. 5

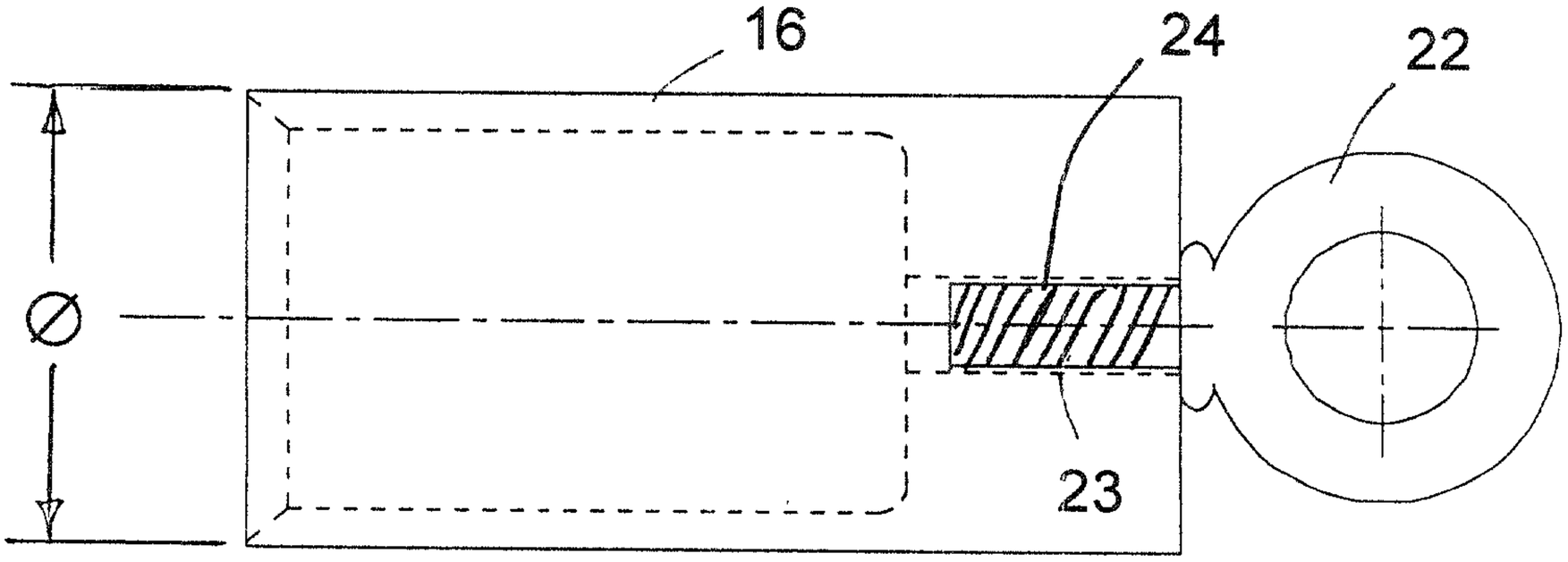

Fig. 6

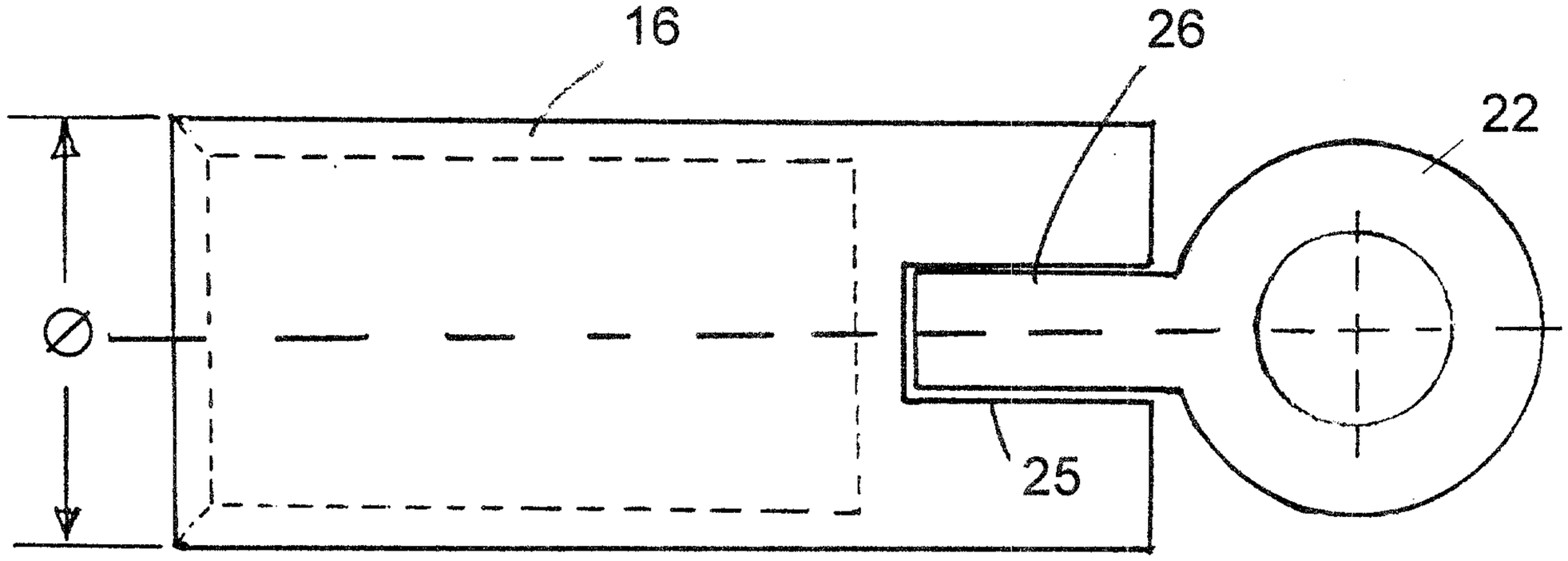

Fig. 7

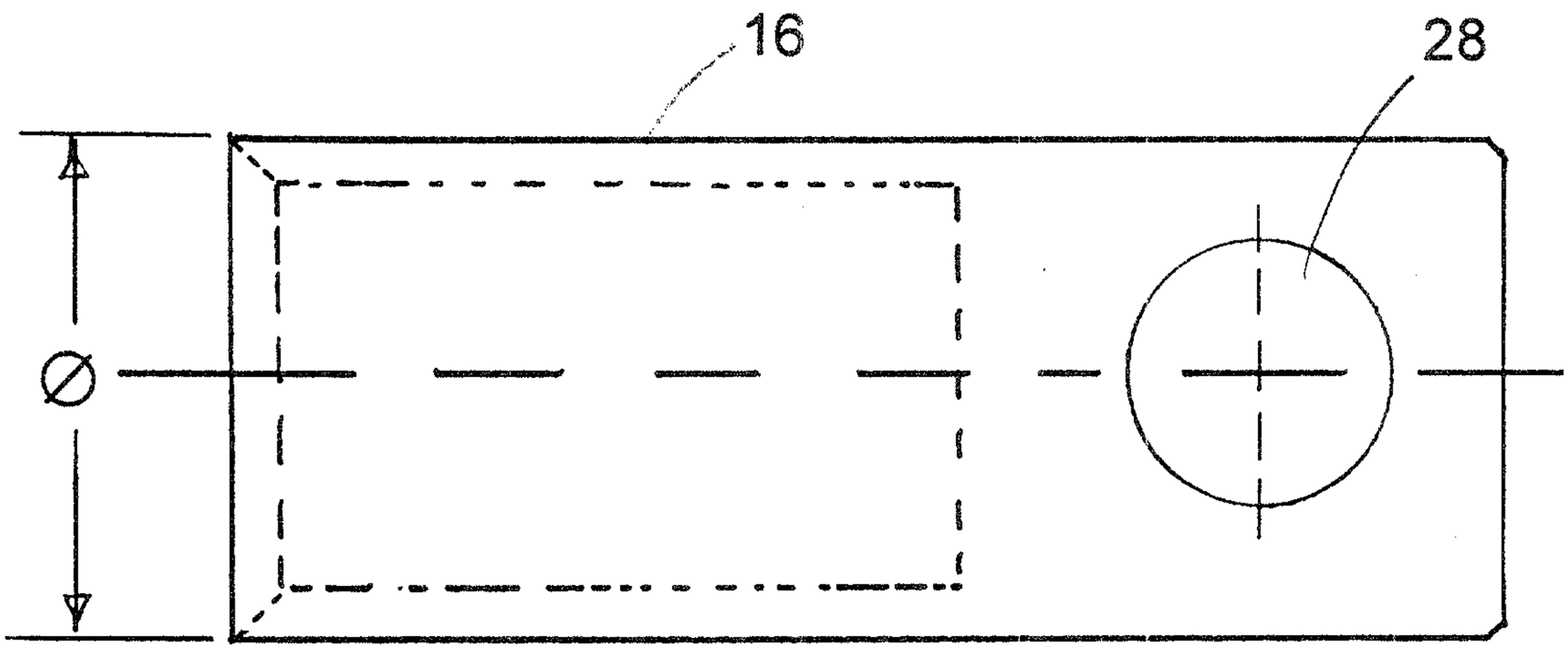

Fig. 8

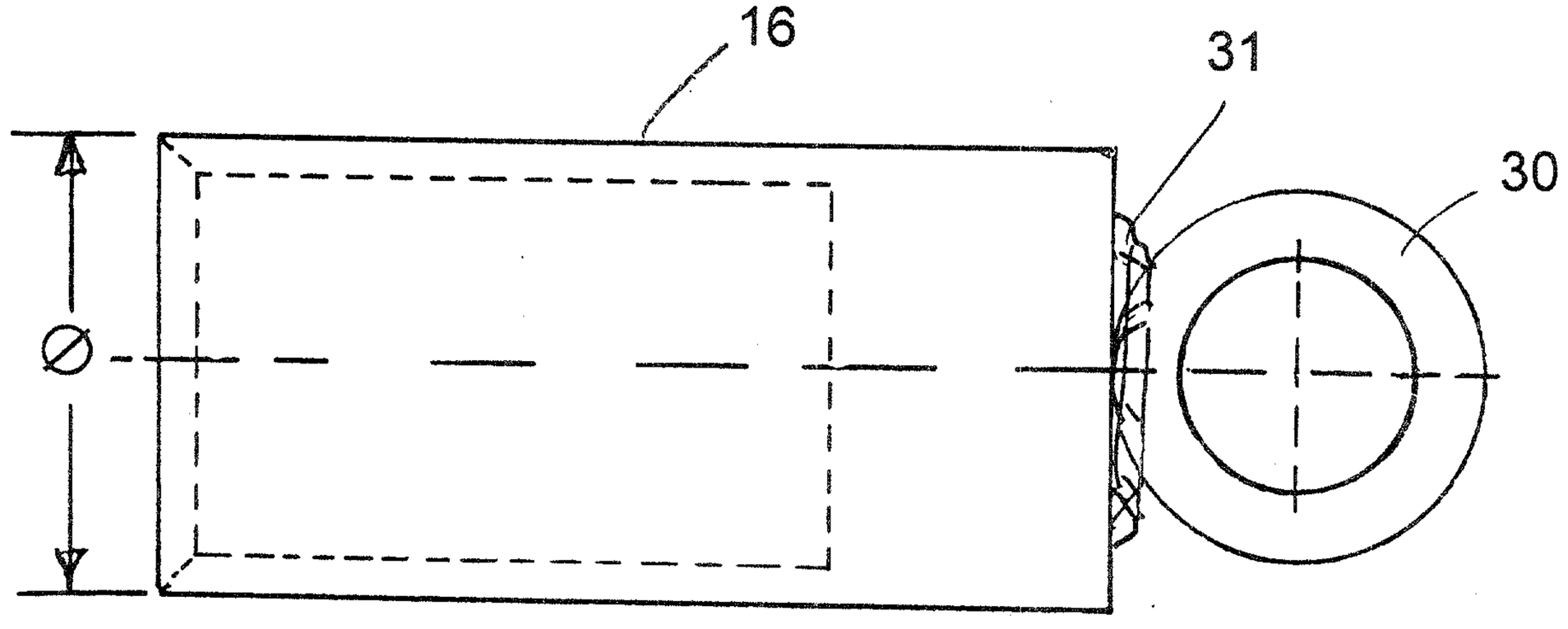

Fig. 9

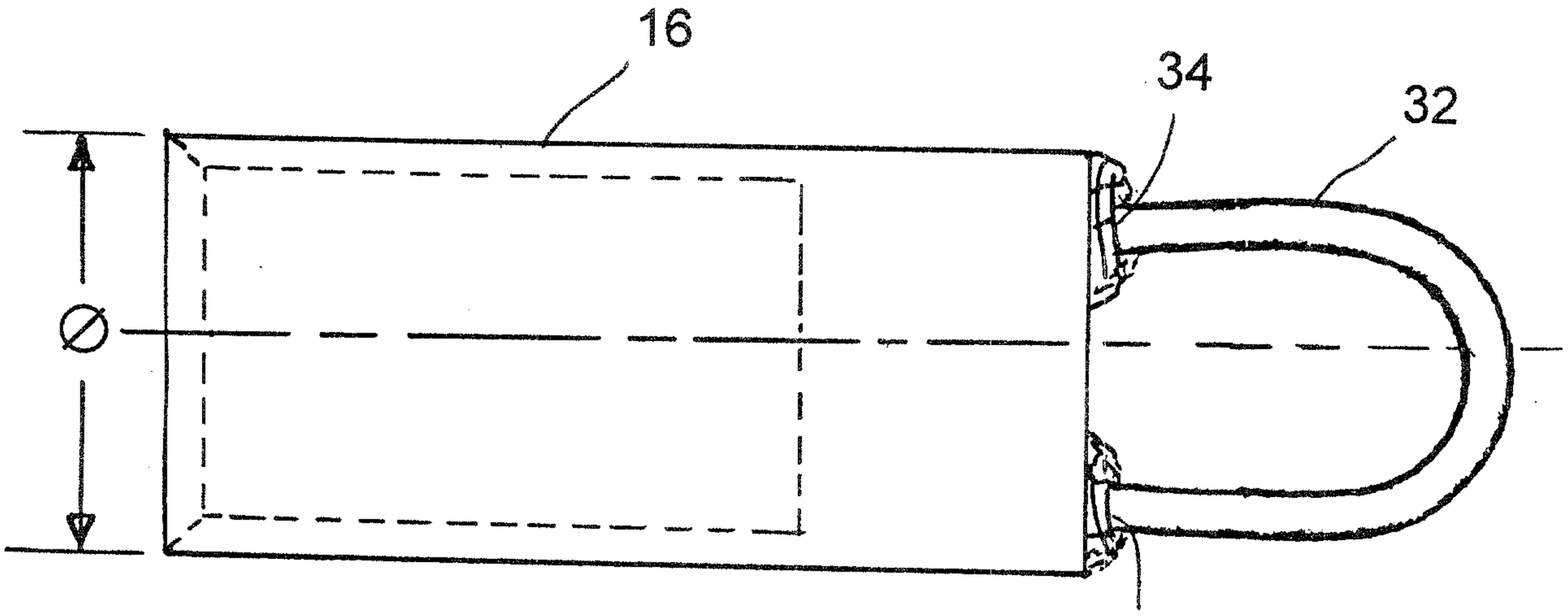

Fig. 10

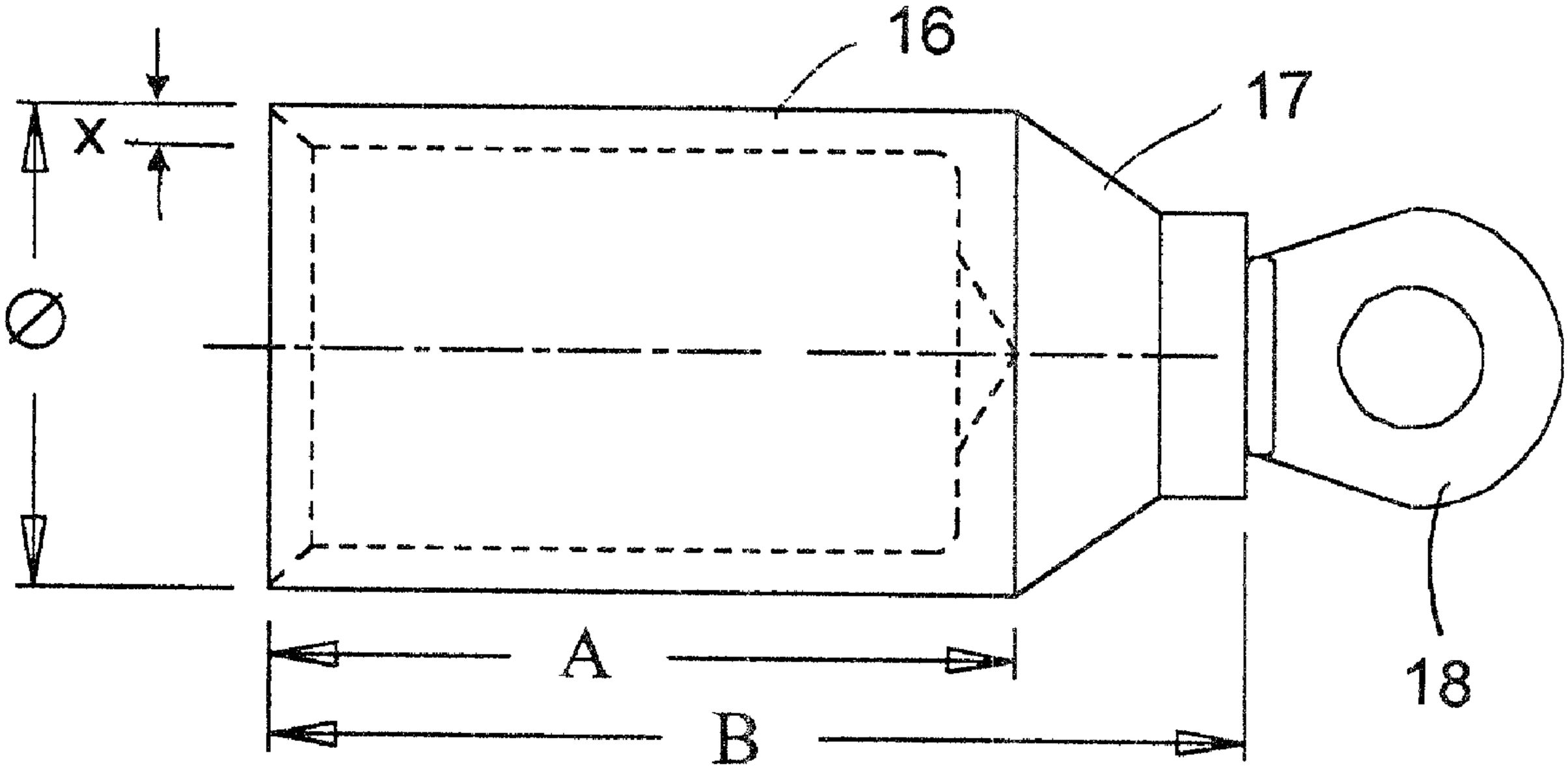
16
17
X
∅
A
B
18