US00D388428S

United States Patent [19]

Lindahl et al.

[11] Patent Number: Des. 388,428

[45] Date of Patent: **Dec. 30, 1997

[54] **MOBILE TELEPHONE**

[75] Inventors: **Richard Lindahl**; **Thomas William Waldner**, both of Malmö , Sweden

[73] Assignee: **Telefonaktiebolaget LM Ericsson**, Stockholm, Sweden

[**] Term: **14 Years**

[21] Appl. No.: **59,491**

[22] Filed: **Sep. 12, 1996**

[30] **Foreign Application Priority Data**

Mar. 13, 1996 [SE] Sweden 96-0587

[51] **LOC (6) Cl.** **14-03**

[52] **U.S. Cl.** **D14/138**

[58] **Field of Search** D14/137, 138, D14/140, 142, 147–151, 240, 248; 379/58–61, 419, 420, 428, 440, 454, 455, 433–436; 455/89, 90

[56] **References Cited**

U.S. PATENT DOCUMENTS

D. 317,606	6/1991	Irie et al.	D14/148
D. 337,763	7/1993	Sei et al.	D14/137 X
D. 338,199	8/1993	Andrew	D14/138
D. 357,249	4/1995	Williams	D14/138
D. 357,250	4/1995	Ifuji et al.	D14/138
D. 362,249	9/1995	Burstedt et al.	D14/138
D. 365,818	1/1996	Irie et al.	D14/147 X
D. 365,819	1/1996	Sawaguchi et al.	D14/138
D. 369,599	5/1996	Wang	D14/147 X
D. 375,732	11/1996	Lindeman et al.	D14/138
D. 376,143	12/1996	Biskup et al.	D14/138

Primary Examiner—Jeffrey Asch

Attorney, Agent, or Firm—Burns, Doane, Swecker & Mathis, L.L.P.

[57] **CLAIM**

The ornamental design for a mobile telephone, as shown and described.

DESCRIPTION

FIG. **1** is a top plan view of the mobile telephone showing our new design with the flipper in an open position;

FIG. **2** is a bottom plan view thereof with the flipper in an open position;

FIG. **3** is a right side perspective view thereof with the flipper in an open position;

FIG. **4** is a left side perspective view thereof with the flipper in an open position;

FIG. **5** is a front, left side, and bottom perspective view thereof with the flipper in an open position;

FIG. **6** is a back, right side, and top perspective view thereof with the flipper in a closed position;

FIG. **7** is a top plan view thereof with the flipper in a closed position;

FIG. **8** is a front elevational view thereof with the flipper in an open position;

FIG. **9** is a bottom elevational view thereof with the flipper in a closed position;

FIG. **10** is a left side elevational view thereof with the flipper in a closed position;

FIG. **11** is a right side elevational view thereof with the flipper in a closed position;

FIG. **12** is a front, left side, and bottom perspective view thereof with the flipper in a closed position;

FIG. **13** is a back elevational view thereof with the flipper in a closed position; and,

FIG. **14** is a front elevational view thereof with the flipper in a closed position.

1 Claim, 14 Drawing Sheets

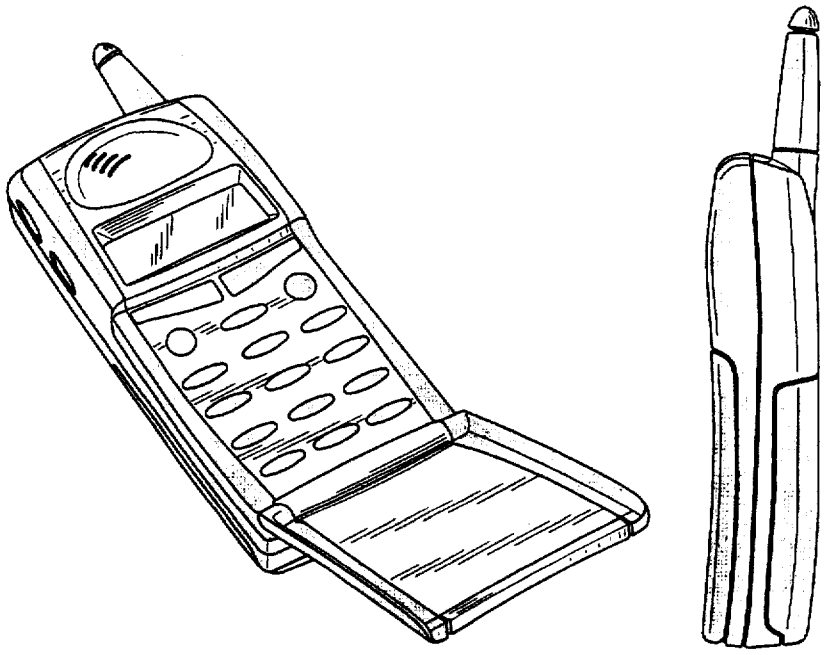

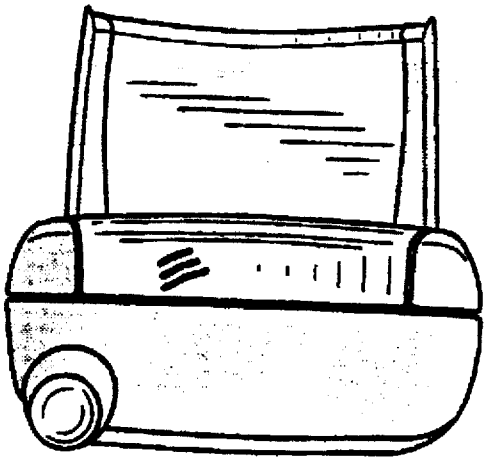

FIG. 1

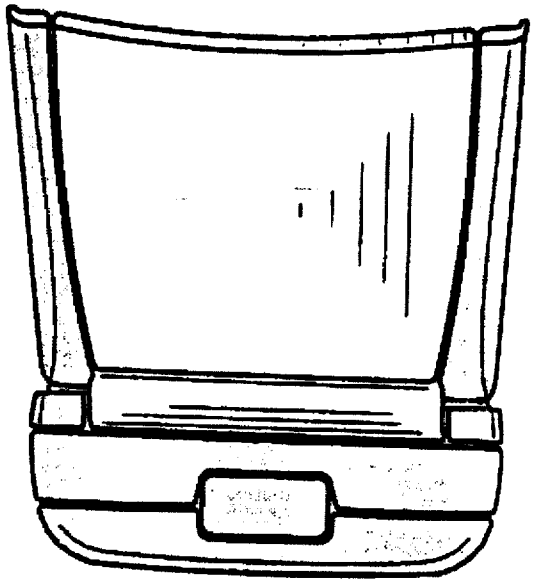

FIG. 2

FIG. 3

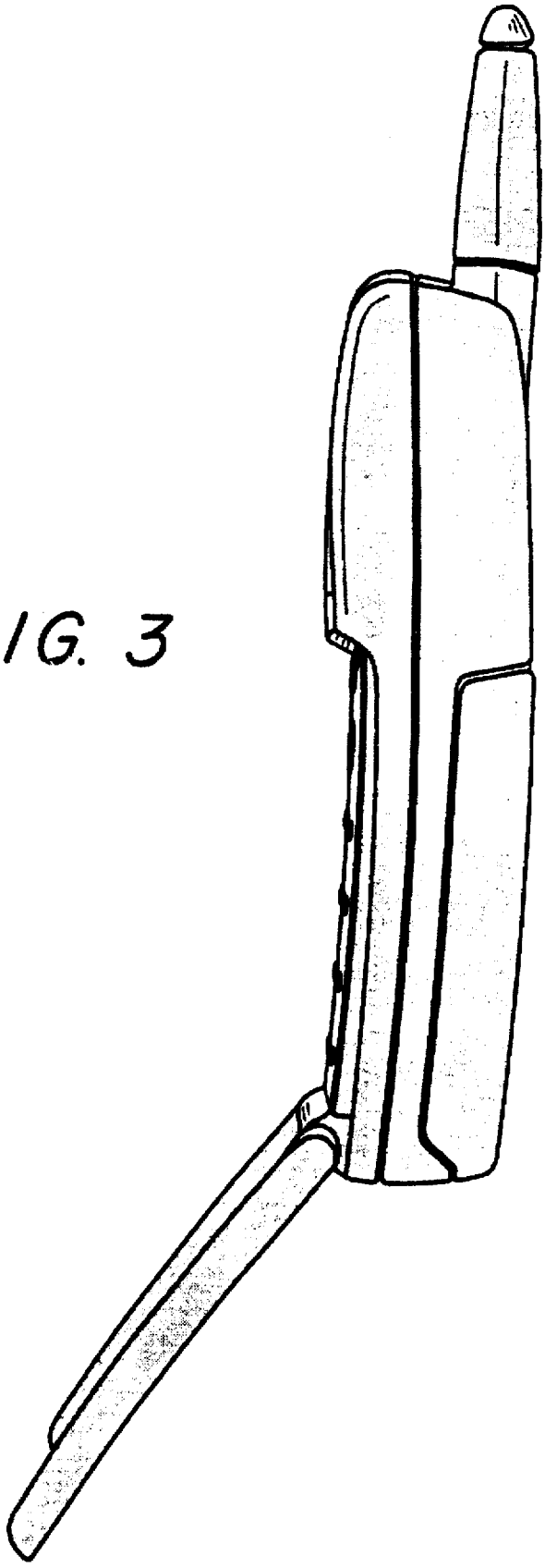

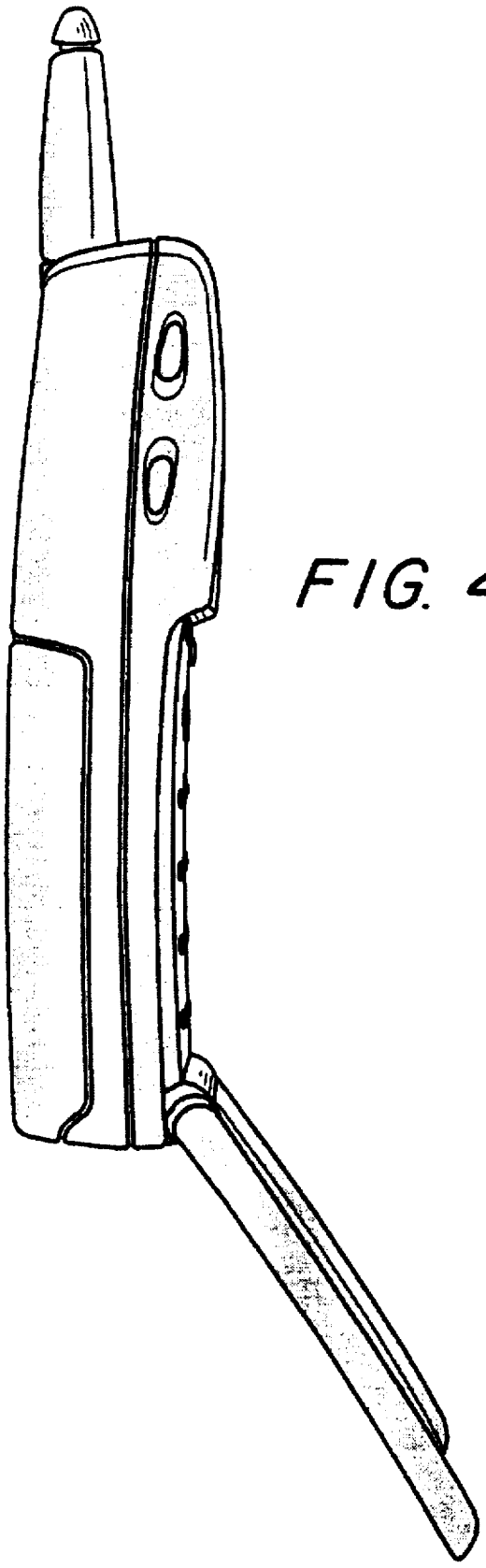

FIG. 4

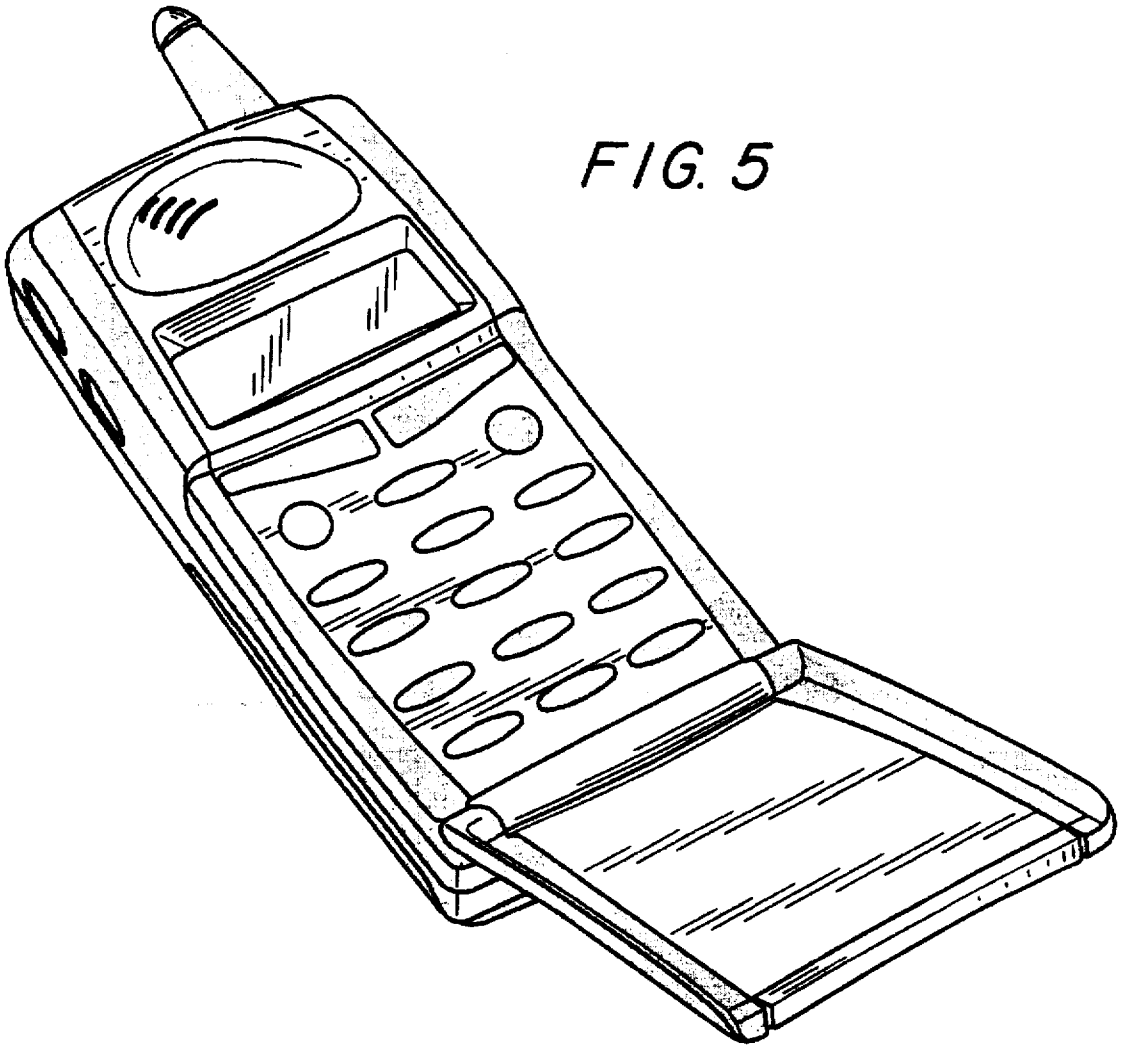

FIG. 5

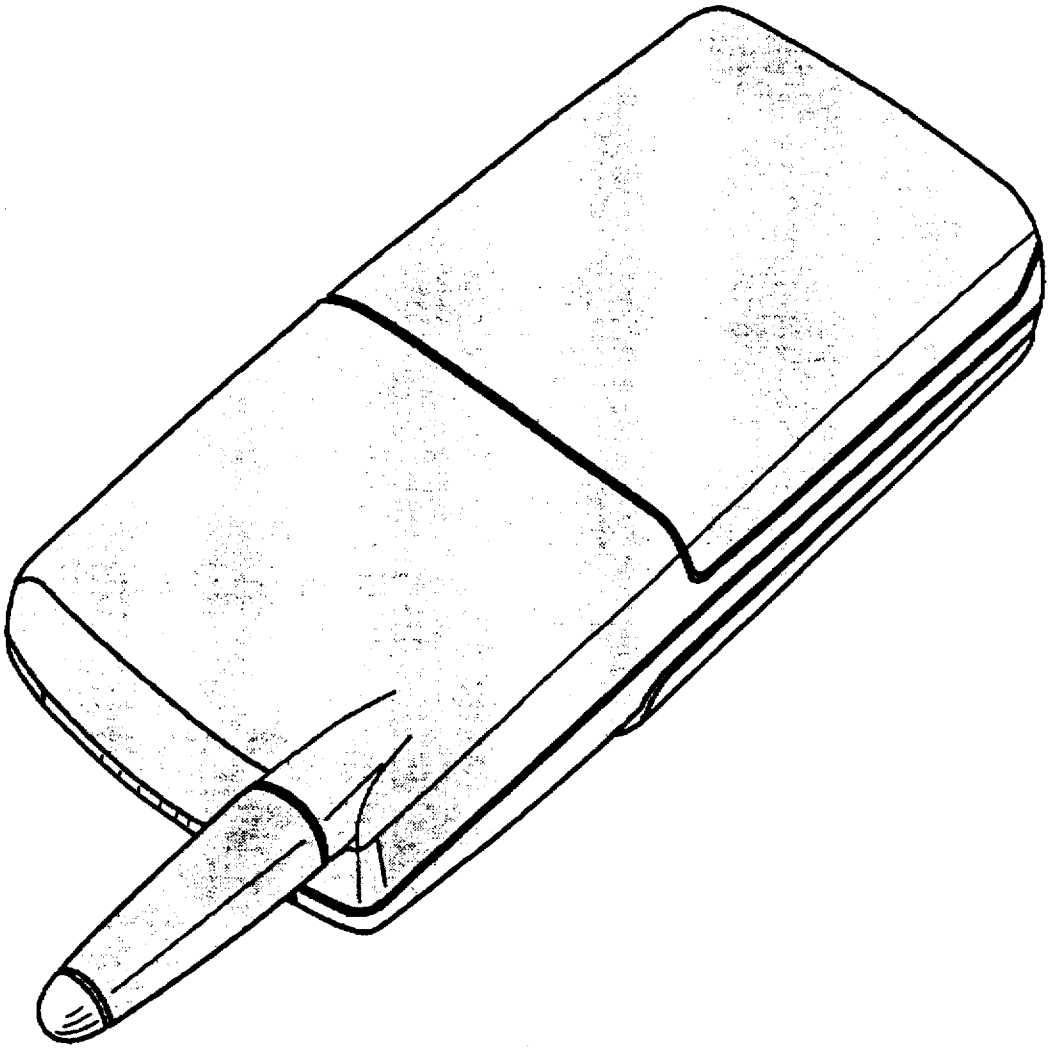

FIG. 6

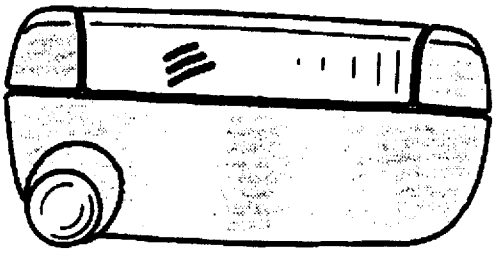

FIG. 7

FIG. 8

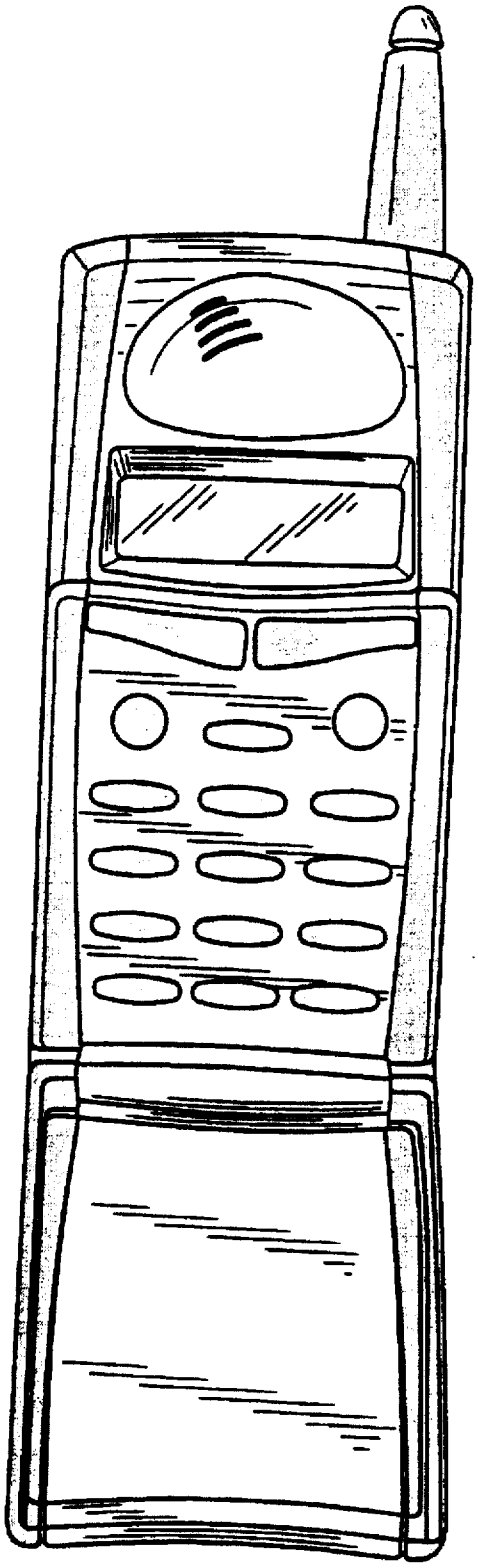

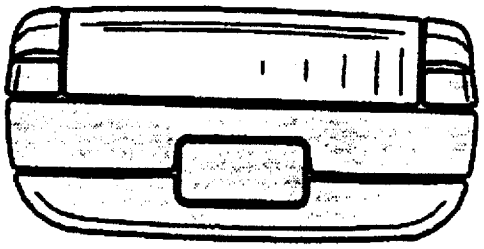

FIG. 9

FIG. 10

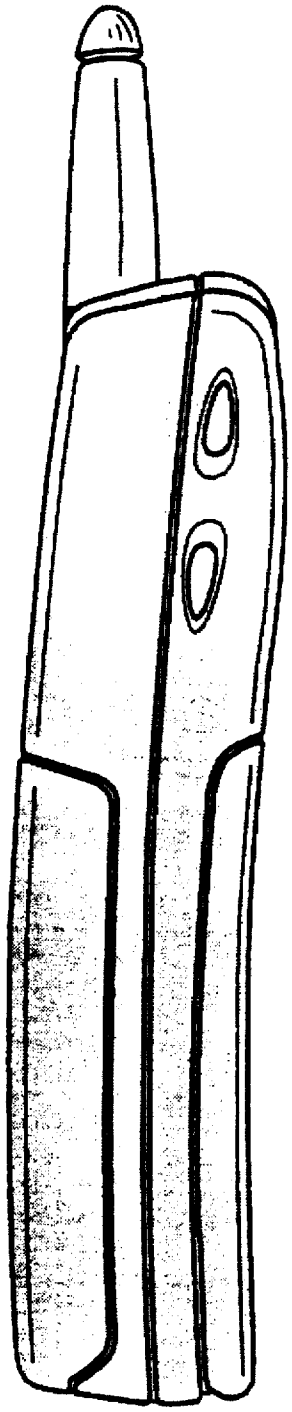

FIG. 11

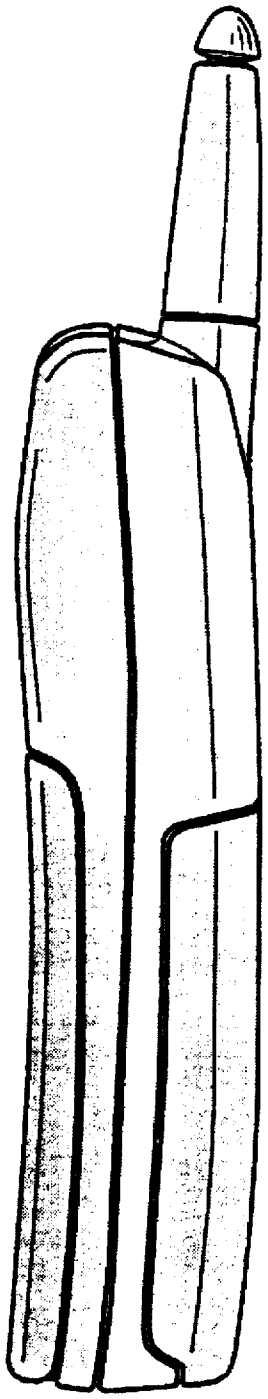

FIG. 12

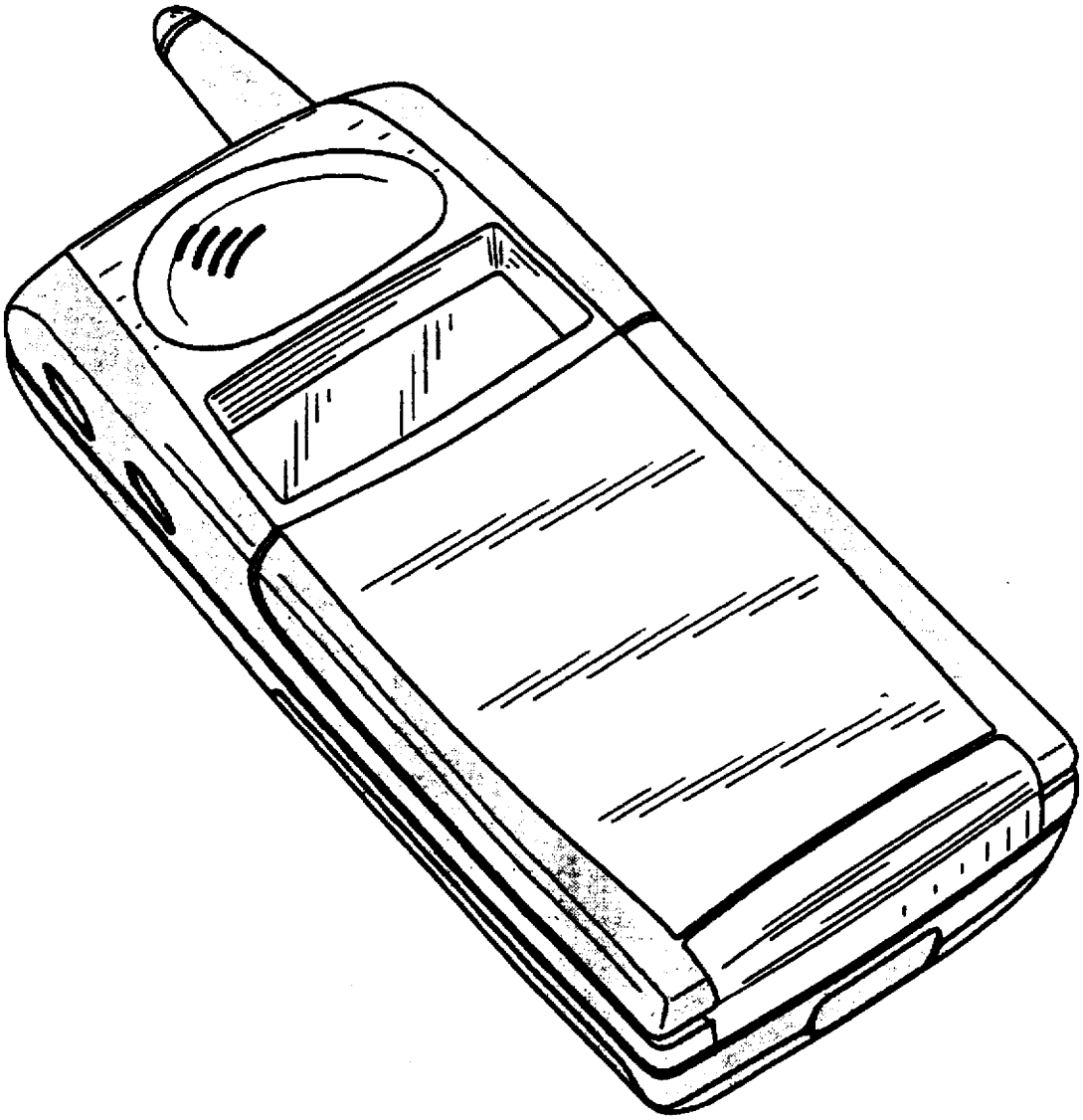

FIG. 13

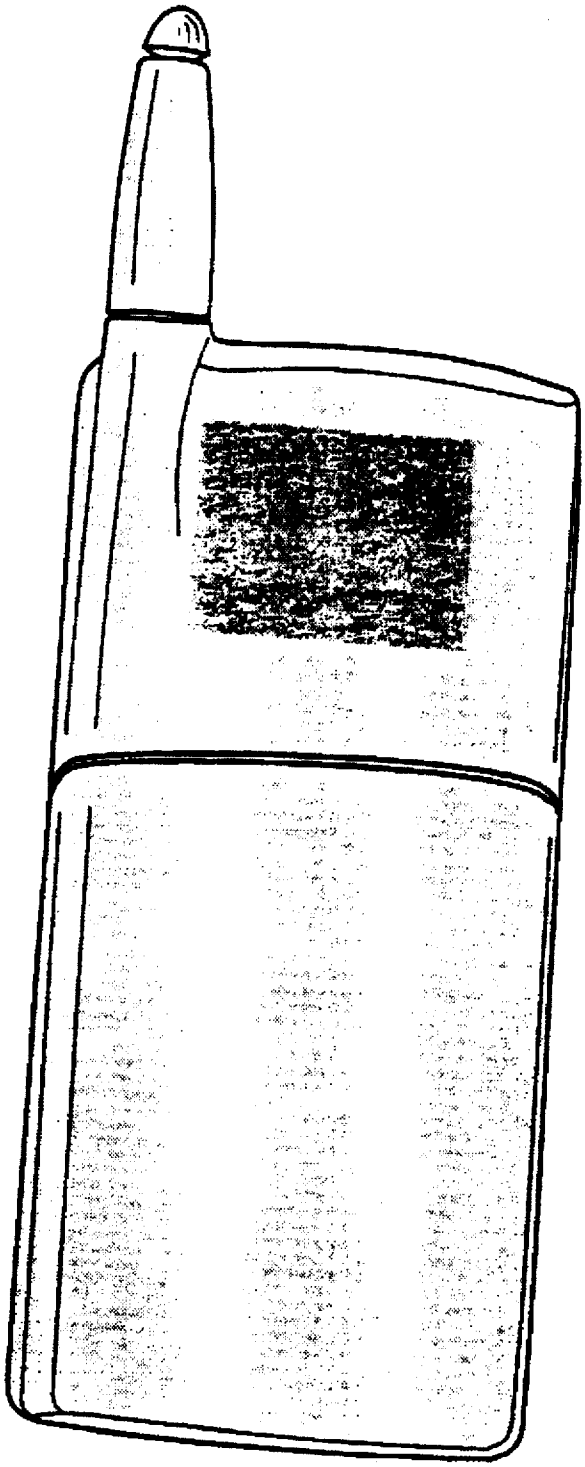
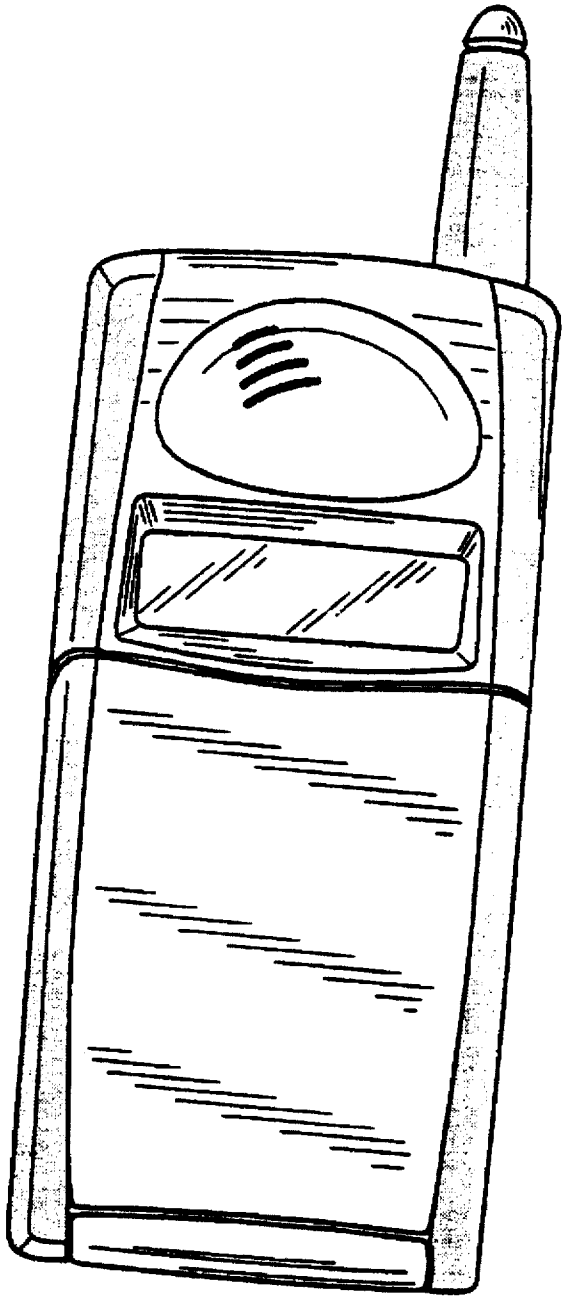
FIG. 14