Feb. 21, 1967 C. W. EICHHORN 3,304,659

GOLF BALL WASHING MEANS

Filed June 7, 1966

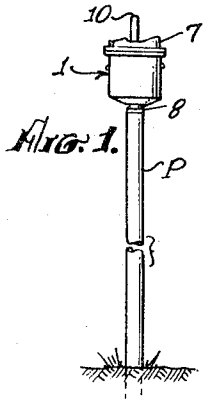

Fig. 1.

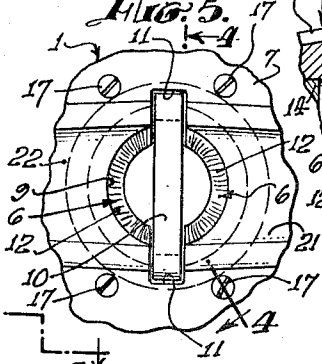

Fig. 5.

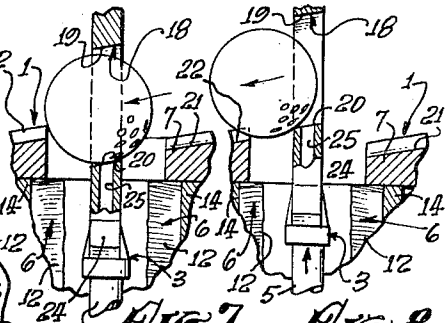

Fig. 7.

Fig. 8.

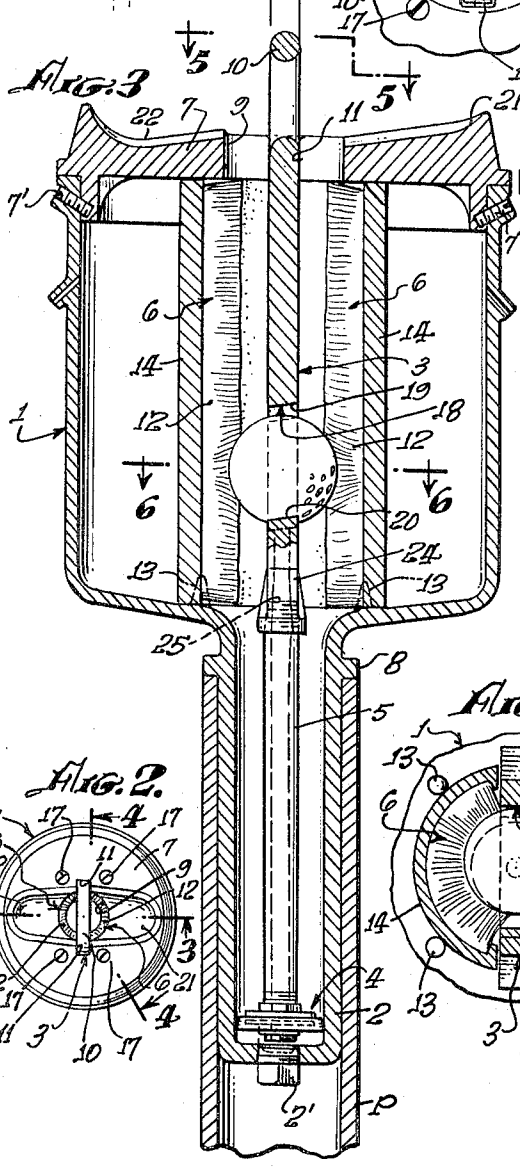

Fig. 3

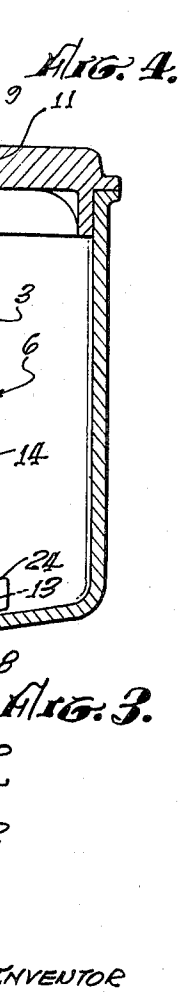

Fig. 4.

Fig. 2.

Fig. 6.

Fig. 3.

INVENTOR

CHARLES W. EICHHORN,

By Harold J. DeVesconte

ATTORNEY.

United States Patent Office 3,304,659 Patented Feb. 21, 1967

3,304,659

GOLF BALL WASHING MEANS

Charles W. Eichhorn, 26718A Oak Crossing Road, Newhall, Calif. 91342

Filed June 7, 1966, Ser. No. 555,816
11 Claims. (Cl. 15—21)

This invention relates to the art of scrubbing and cleaning and more particularly to a golf ball cleaning means operable to thoroughly clean a golf ball and at the same time rinse the surface thereof.

The principal objects of the invention are: to provide a golf ball cleaning means having means for automatically moving a golf ball into engagement with the cleaning means and automatically discharging it from the cleaning means; which includes a jet pump means for rinsing off a ball being cleaned, which is of simple construction and susceptible of economical manufacture; and which is simple to operate and reliable for its intended purpose.

With the foregoing objects in view, together with such additional objects and advantages as may subsequently appear, the invention resides in the parts, and in the construction, combination and arrangement of parts described, by way of example, in the following specification of the presently preferred embodiment of the invention, reference being had to the accompanying drawings which form a part of said specification and in which drawings:

FIG. 1 is a side elevational view of a device embodying the present invention as installed on a golf course,

FIG. 2 is an enlarged top plan view of the device shown in FIG. 1,

FIG. 3 is a further enlarged scale medial, longitudinal sectional view taken on the line 3—3 of FIG. 2,

FIG. 4 is a sectional side elevation on the same scale as FIG. 3 but taken substantially on the staggered line 4—4 of FIGS. 1 and 5,

FIG. 5 is a fragmentary top plan view on the same scale as FIGS. 3 and 4 of the center portion of the top of the device,

FIG. 6 is a fragmentary transverse section taken on the line 6—6 of FIG. 3, and

FIGS. 7 and 8 are fragmentary sectional views on the same scale as FIG. 3 and taken on the same sectional line as FIG. 3 illustrating, respectively, the loading of the device with a golf ball to be washed and the discharge therefrom of a golf ball after having been washed.

The illustrated embodiment of the invention comprises a vertically disposed, cylindrical hollow body or tank 1 having a pump cylinder 2 disposed in axial alignment therewith and extending from the bottom thereof and closed at its lower end by a screw plug 2', a reciprocable, ball carrying plunger element 3, a pump piston means 4 in the pump cylinder carried by a piston rod 5 depending from the lower end of the plunger element 3, a pair of ball cleaning brushes 6, 6 disposed in the tank 1 and a tank cover 7 closing the upper end of the tank and secured thereon by any suitable means such as screws 7', 7', said tank cover having ball guiding means in the upper face thereof to be presently described in detail.

The device is customarily removably installed adjacent to each tee of a golf course by having the pump cylinder 2 inserted in the upper end of a hollow pipe P of which the lower end is embedded in the ground, there

being a stop collar 8 on the upper end of the cylinder engageable with the end of the supporting pipe.

The cover 7 has a central opening 9 of slightly greater diameter than the diameter of the golf ball and the plunger element 3 is a flat member of greater width than the diameter of the opening 9 and of less thickness than the diameter of a golf ball and of a length sufficiently greater than the length of the tank so that when inserted to its full length in the tank, the upper end will project above the tank to serve as an operating handle portion 10, the opening 9 in the cover being provided with diametrically opposite slots 11, 11 affording guidance for the edges of the plunger member 3 and the piston 4 and piston rod 5 by extending from the lower end plunger element 3 and engaging the cylinder 2 serving as the guiding means for the lower end of the plunger in addition to another function presently to be described.

The brushes 6, 6 extend the length of the tank between the bottom thereof and the under side thereof of the cover and are concentrically disposed with respect to the axial line of the ball receiving 9 in the cover. The configuration in end elevation of the brushes is segmental in shape or, in other words, semicircular with so much removed as will afford clearance for the member 3 to move between the brushes. The bristle portions 12, 12 of the brushes extend toward the center about which the brush is generated with the free ends of the bristles defining a curved plane generated about a radius somewhat less than the radial dimension of a golf ball. Lugs 13 extending upwardly from the bottom surface of the tank engage the outer surfaces of the brush backs 14, 14 and said brush backs at their upper ends may be secured to the cover by suitable means as, for example, angle brackets 15, secured thereto by screws 16 and including outwardly projecting arm portions secured to the cover by screws 17

Adjacent its lower end, the plunger member 3 is provided with a slightly angularly canted, rectangular opening 18 of sufficient size to loosely receive a golf ball, the upper and lower surfaces 19 and 20 of said opening sloping parallel to each other from side to side of the plunger The cover 7 is provided with a loading groove 21 extending radially from the opening 9 in a direction normal to the adjacent side face of the plunger element 3 and with a discharge groove 22 extending diametrically opposite from the hole 9 to the edge of the cover, the loading groove sloping downwardly toward its juncture with the hole 9 and the discharge groove 22 sloping downwardly away from the hole 9 from an elevation somewhat higher than the elevation of the termination of the loading groove 21 for purposes which will be apparent in connection with the description of the mode of operation of the device.

In use, assuming that the tank is filled with water and that the plunger is in its lowermost position as shown, for example, in FIGS. 3 and 4, a golf ball to be cleaned is placed in the loading groove 21 and the plunger is pulled upwardly until the opening 18 is opposite the lower end of the groove 9 (see FIG. 7) at which time the ball will roll into the position shown in that figure and will be stopped by engagement with the higher opposite side of the opening 9 which forms the beginning end of the discharge groove 22. Moving the plunger downwardly will carry the ball down between the brushes and reciprocation of the plunger moving the ball up and down along the brushes will clean the surface thereof.

Having reference to FIG. 3, it will be noted that the sloping surface **19** of the opening **18** on the downward movement of the plunger and ball will tend to force the ball into tighter engagement with the brush **6** at the right hand side as viewed in that figure so that the ball will have a somewhat rolling contact with that brush with a resultant wiping contact with the left hand brush **6** with which it is in slightly less frictional contact and that upward movement of the plunger and ball will reverse this action so that the rolling contact will be on the left hand brush **6** and the wiping or scrubbing contact will be on the right hand brush **6**. Additionally, the slightly canted or angular position of the surfaces **19** and **20** widthwise of the brush will tend to move the ball somewhat sidewise in the opening **18** so that the rolling action instead of being around a horizontal axis will be around an axis at an angle to the vertical as suggested by the arrow in FIG. 4 and accordingly, with only one or two strokes of the plunger element **3**, a ball carried thereby can be thoroughly scrubbed over its entire surface.

There remains to be described the function of the pump cylinder and the associated piston. The piston rod **5** is hollow and extends through the piston **4**. At its upper end, the piston rod threadedly engages a hole **25** in the plunger **3** which extends to the ball carrying opening **19**. The sides of the piston **4** fit loosely in the cylinder and there are no valves on or in the piston rod **5**. Thus, as the plunger **3** is raised pulling the piston **4** up with it, water will be drawn down into the cylinder through the hole **25** and the hollow piston rod **5** to the under side of the piston. The down stroke of the plunger **3** and piston will produce a forceful jet of water through the piston rod and hole against the under surface of the rotating ball rinsing it and being deflected laterally by impingement on the surface of the ball to wash away any collected dirt out of the brush bristles. Thus not only is the device useful in cleaning a golf ball but the very action of cleaning the golf ball also serves to keep the ball contacting and cleaning bristles clean as well. When the cleaning action is done, the plunger is pulled upwardly until the stops **24**, **24** engage the under side of the cover **7** at which time (see FIG. 8) the surface **20** of the opening **18** is in alignment with the upper end of the discharge groove **22** permitting the ball to roll out of the opening **18** to be picked up. At the same time, a ball resting in the loading groove **21** will be stopped against the side of the plunger and on the beginning of the downward movement of the plunger (see FIG. 7) that ball will roll into the opening **18** for cleaning action by the above described operation of the device.

Thus there has been provided a simple golf ball cleaning device which not only is self-loading and self-unloading but which is simple in construction and which further, not only assists in cleaning the ball but by the impingement of a water jet against the ball surface in addition to scrubbing action in which that same jet action is employed to clean the ball scrubbing brush elements. While in the foregoing specification, there has been disclosed a presently preferred embodiment of the invention, the invention is not to be deemed to be limited to the precise details of construction thus shown by way of example and it will be understood that the invention includes as well all such changes and modifications in the parts and in the construction, combination and arrangement of parts as shall come within the purview of the appended claims.

I claim:

1. In a golf ball washing means, a tank for holding a quantity of water and having a bottom wall and a cover having a golf ball receiving opening extending therethrough, a golf ball carrying plunger reciprocable through said cover, guide means for said plunger associated with said opening, a golf ball receiving opening in said plunger, brush means in said tank so disposed at opposite sides of the path of reciprocation of a golf ball carried by said plunger as to engage the ball to clean the surface thereof, means on the outer face of said cover effective to use the force of gravity to cause the automatic insertion of a golf ball into said opening in said plunger, and cooperating means on said plunger and on the outer face of said cover effective to use the force of gravity to effect the discharge of a golf ball from said opening in said plunger .

2. A golf ball washing means as claimed in claim **1** in which said bottom wall of said tank carries means for guiding the lower end of said plunger.

3. A golf ball washing means as claimed in claim **2** in which said bottom wall of said tank includes a pump cylinder disposed in alignment with the direction of reciprocation of said plunger and in which said plunger carries piston means reciprocable in said cylinder and constituting said guiding means for the lower end of said plunger.

4. A golf ball washing means as claimed in claim **3** in which said piston means includes a hollow piston rod and conduit means associated therewith affording communication with said ball receiving opening in said plunger effective upon downward movement of said plunger and piston means to expel water from said cylinder through said piston rod and conduit means against a golf ball in said plunger opening.

5. A golf ball washing means as claimed in claim **1** including means for limiting the extent of upward movement of said plunger and in which means for the said insertion and discharge of a ball includes ball guiding means on said cover operative to permit a ball to roll into said plunger opening for washing and to permit a ball to roll out of said plunger opening at the option of the user.

6. A golf ball washing means as claimed in claim **5** in which said means for effecting the automatic insertion of a golf ball in said opening in said plunger comprises a ball guiding groove on the outer face of said cover sloping downwardly from the edge of said cover to said ball receiving opening in said cover at a point thereon which is in alignment with said opening in said plunger when said plunger is near the limit of its upward movement.

7. A golf ball washing means as claimed in claim **5** in which said means for limiting the extent of upward movement of said plunger includes stop means on said plunger, and in which when said plunger is at the extent of movement determined by said stop means, said ball supporting surface of said plunger opening and said ball guiding groove are in alignment to permit a ball to roll from said opening into said groove.

8. A golf ball washing means as claimed in claim **5** in which said cooperating means for effecting the discharge of a golf ball from said plunger comprises a downwardly sloping ball supporting surface in said opening in said plunger and a downwardly sloping ball guiding groove on the outer surface of said cover extending from the side of said ball receiving opening in said cover which is adjacent the lower side of said ball supporting surface of said plunger opening to the edge of said cover with the upper end of said groove being so disposed that it is not above the lower side of said sloping ball supporting surface of said plunger opening when said plunger is at the extent of its upward movement whereby said sloping surfaces cooperate to allow a golf ball to roll out of said plunger opening into said groove.

9. In a golf ball washing means, a tank for holding a quantity of water and having a bottom wall and a cover, means for reciprocating a golf ball vertically in said tank, brush means in said tank at opposite sides of the path traversed by a golf ball reciprocated in said tank operative to effect a scrubbing action on the ball surface, and pump means actuated by said ball reciprocating means as an incident to reciprocation thereof effective to impinge a jet of water from the water in said tank against the surface of a ball being reciprocated by said reciprocating means.

10. A golf ball washing means as claimed in claim **9** in which said ball reciprocating means comprises a plunger reciprocable in guide means and having a golf ball receiving opening, a pump cylinder formed in said

bottom wall as a continuation of said tank, a piston reciprocable in said cylinder, a piston rod carrying said piston and forming an extension of said plunger, and fluid conduit means extending from the side of said piston remote from said plunger to said ball receiving opening.

11. A golf ball washing means as claimed in claim 10 in which said piston rod is hollow and constitutes at least a portion of said fluid conduit means.

References Cited by the Examiner

UNITED STATES PATENTS

1,850,870	3/1932	Featherstone	15—547 X
3,102,291	9/1963	Frater	15—21.1

CHARLES A. WILLMUTH, *Primary Examiner.*

E. L. ROBERTS, *Assistant Examiner.*