D. MORGAN.

DOOR OPERATING MECHANISM.

APPLICATION FILED OCT. 24, 1911.

1,076,051.

Patented Oct. 21, 1913.

2 SHEETS—SHEET 1.

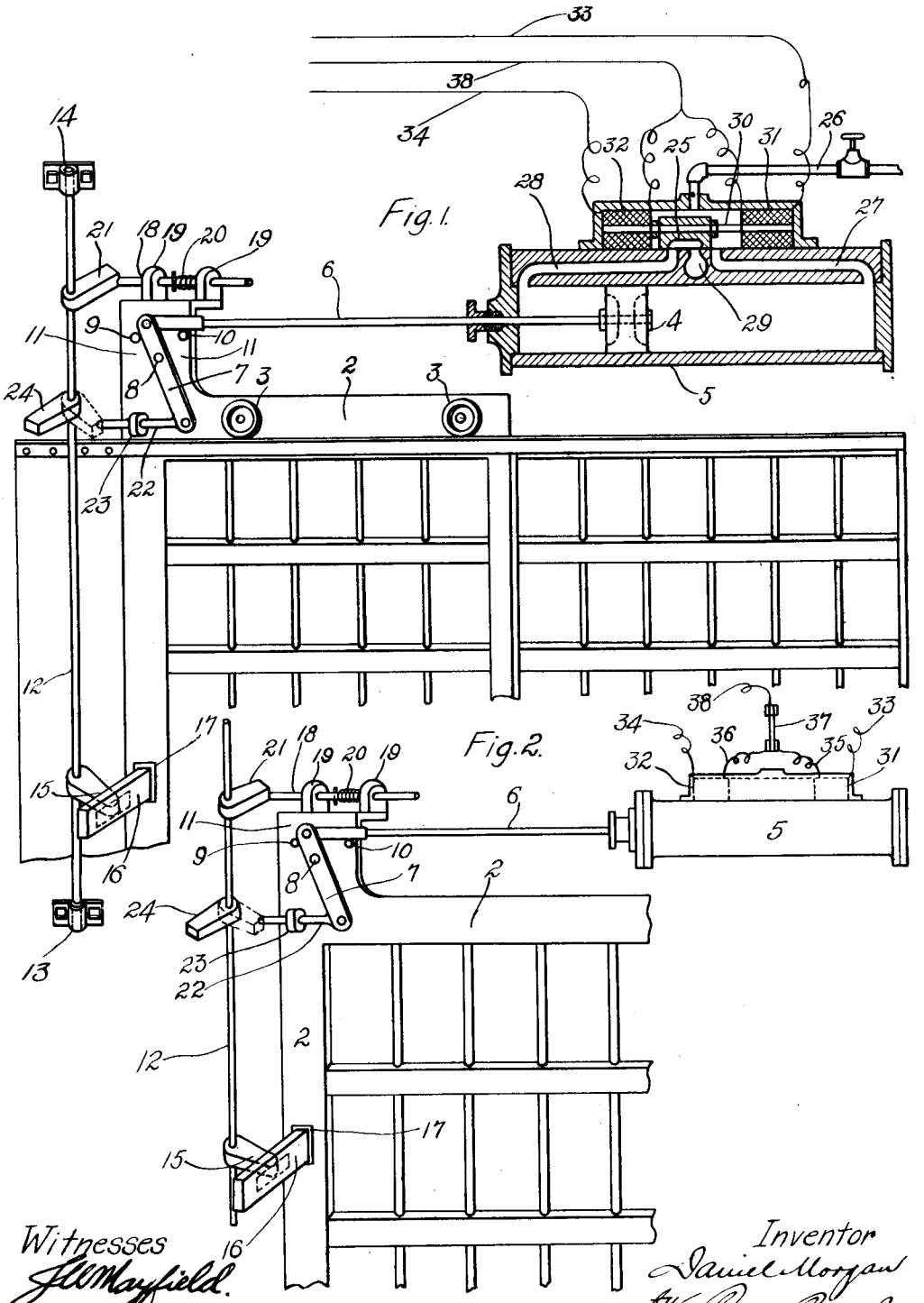

Fig. 1.

Fig. 2.

D. MORGAN.

DOOR OPERATING MECHANISM.

APPLICATION FILED OCT. 24, 1911.

1,076,051.

Patented Oct. 21, 1913.

2 SHEETS—SHEET 2.

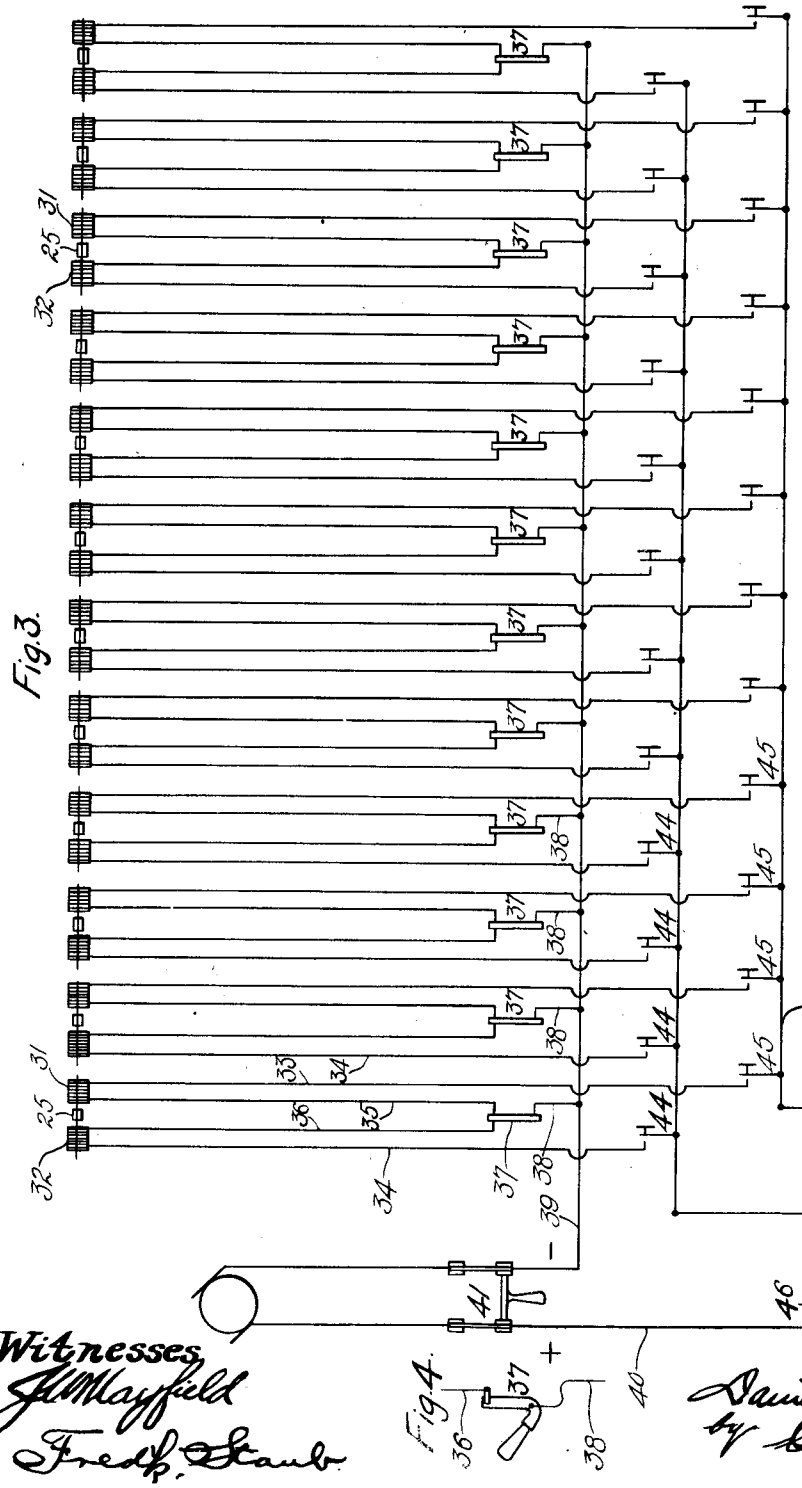

Witnesses,
J. M. Mayfield
Fredk. Staub

Inventor
Daniel Morgan
by C. M. Clarke
his attorney

UNITED STATES PATENT OFFICE.

DANIEL MORGAN, OF ASPINWALL, PENNSYLVANIA, ASSIGNOR OF ONE-HALF TO A. H. LESLIE, OF HOBOKEN, PENNSYLVANIA.

DOOR-OPERATING MECHANISM.

1,076,051. Specification of Letters Patent. Patented Oct. 21, 1913.

Application filed October 24, 1911. Serial No. 656,450.

To all whom it may concern:

Be it known that I, DANIEL MORGAN, a citizen of the United States, residing at Aspinwall, in the county of Allegheny and State of Pennsylvania, have invented certain new and useful Improvements in Door-Operating Mechanism, of which the following is a specification.

My invention consists of an improvement in door operating mechanism and is designed for the purpose of locking and unlocking one or any number of a series of doors, or other similar opening and closing devices, by means of individual motors for each door, each having connection with a source of actuating fluid, as compressed air, and electrically actuated valve mechanism, with suitably arranged circuits therefor, and controlling switches, etc.

The invention is particularly designed for the operation of a series of cell doors.

The objects in view are to provide an automatic opening and closing, and locking and unlocking mechanism. To provide means for actuating any one or a number of particular doors. To control the operation of all of the doors by a dead-lock switch adapted to open or close the electric circuit to all of the motors. To provide a master switch for closing all of the doors. To provide a series of individual switches for opening, and a series of individual switches for closing the doors; and to provide a series of individual dead-lock switches for rendering inoperative any one or a particular number of doors. Also to provide a complete system subject to the control of the said several switches, mounted on a switch board with suitable circuit connections, as shall be more fully hereinafter described.

In the drawings: Figure 1 represents a cell door mounted for operation to open and close a cell and showing the locking and unlocking mechanism and the actuating motor, valve, magnets and connections thereto. Fig. 2 is a similar detail perspective view, illustrating the locking and unlocking mechanism more fully. Fig. 3 is a diagrammatic view illustrating the circuit connections and controlling devices for a series of doors. Fig. 4 is a detail view illustrating one of the individual dead lock switches.

In the drawings, 2 represents the movable door adapted to open and close a cell, and provided with supporting rollers 3, 3. The door is moved to open or closed position by a piston or plunger 4 of a fluid-actuated cylinder 5, the piston rod 6 of the cylinder extending forwardly and being connected with the door by means of a lever 7 pivotally mounted at 8. The purpose of lever 7 is to provide for preliminary unlocking movement before the door is shifted to open position and its movement is limited by pins or abutments 9, 10, respectively, on an upwardly extending bracket or support 11 of the door 2.

A rock shaft or bar 12 is suitably mounted in the cell frame in bearings 13, 14, therein, and is provided with a lever 15 and locking bolt 16, connected therewith, and adapted to be inserted into and withdrawn from a bolt opening or socket 17 in the door 2. The bolt 16 is understood to be mounted in suitable keepers or slides, and is provided with a socket for the end of the actuating bolt 16.

Partial rotation of shaft 12, to lock the door after it has been pushed to closed position, is accomplished by bolt or abutment 18 mounted in bearings 19 at the upper part of bracket 11, provided with a cushioning spring 20. In closing the door the upper portion of lever 7 is thrust forwardly against the abutment 9, the lower portion of the lever 7 being correspondingly withdrawn as indicated in Fig. 2.

Secured to the upper portion of shaft 12 is a lever 21 extending into the path of movement of bolt 18 and adapted to be engaged thereby near the limit of movement of the door. The end of bolt 18 coming into contact with lever 21 is depressed backwardly somewhat against the pressure of spring 20, which then re-acts to operate shifting lever 21, imparting a partial rotation to shaft 12 and thrusting bolt 16 into its socket 17.

In opening the door the preliminary backward movement of the piston rod 6 operates to thrust the lower end of lever 7 outwardly before its upper end comes into contact with the abutment 10. To the lower end of lever 7 is pivotally connected a bolt 22 mounted in a guide or keeper 23 on the door.

A lever 24, similar to lever 21, is secured to rock shaft 12 and in the closed position of the door is thrown around into the position indicated in dotted lines, Fig. 2, in range of the end of bolt 22. Said bolt, by

the initial movement of piston rod 6, is thrust outwardly, engaging lever 24 and throwing it backwardly to the position shown, thereby actuating lever 12 to withdraw locking bolt 17 to permit opening movement of the door.

The operation of closing and opening the door is controlled by admission of fluid to one end or the other of cylinder 5 by the action of slide valve 25. Said valve is of the usual construction and operates to establish pressure from the supply port 26 through port 27 to one end of the cylinder to close the door, or through port 28 to the other end of the cylinder to open the door, as will be readily understood, the exhaust pressure escaping in the usual way through exhaust port 29.

Slide valve 25 is provided with a stem 30, each end of which constitutes an armature and extends into a solenoid magnet 31 and 32 respectively. Said magnets are, as shown, incased within the valve chest of cylinder 5 for protection from outside exposure. It is designed that one or the other of said magnets shall be energized under the action of a circuit established thereto through supply wires 33 and 34 respectively and neutral or return wires 35, 36, respectively, leading to a common dead-lock switch 37. Each of said dead-lock switches 37 opens or closes the circuit through a branch conductor 38 with a common conductor 39, constituting one side of the main circuit and connected with a generator G or any suitable source of current. The other main conductor 40 leads to the other side of the generator and conductors 39 and 40 are provided with a main dead-lock switch 41, which may be the usual double-blade single-throw knife switch of well-known construction.

Branch conductors 42 and 43 are connected at one side of the circuit by switches to conductor 40, and each of said branch conductors 42 and 43 respectively, is connected with the several individual magnets 31 and 32 respectively through individual switches 45 and 44 respectively. Said switches, which may be of the push button type, are adapted to establish an operative circuit to one or the other of the solenoid magnets to open or close the door, it being understood that the individual dead-lock switches 37 are closed.

When it is desired to render any particular one or more doors inoperative from their particular motors, the corresponding dead-lock switches 37 may be opened and retained open until it is desired to render such door or doors operative. Likewise, when it is desired to operate all of the doors to either open or close the same, I provide branch circuit connections 46 and 47 respectively, from main conductor 40 with master switches 48 and 49, adapted to open and close the circuit from conductors 46 and 47, and branch conductors 50 and 51. Conductor 50 is connected in series with the magnet conductors 34 beyond the switches 44, whereby to simultaneously energize all of the magnets 32, when switches 44 are closed, while branch conductor 51 is connected in series with all of the branch conductors 33 leading to magnets 31, whereby to operate all of the said magnets to shift the valve and operate the door in the opposite direction.

I provide the individual dead lock switch 41 for breaking the circuit connection to all of the actuating magnets in either open or closed position. Also, the master switch 48 for opening or closing the circuit to all of the magnets 32 for closing all of the doors, and the master switch 49 for closing circuit to all of the magnets 31 for opening all of the doors. The individual dead-lock switches 37 are for rendering inoperative any particular door or doors, and the individual switches 44 and 45 are for operating any particular door in one direction or another. The operator is thereby enabled to dead-lock any number of doors and then open the rest of the doors by merely closing the master switch 48, or to open all of the rest of the doors, by closing master switch 49.

It will be understood that the several switches or push buttons are mounted on a suitable switchboard and are easily identified with the doors which they are adapted to control, by suitable numbers or otherwise.

While I have indicated the apparatus as utilized with a system of twelve doors, it will be understood that it is equally available for any desired number. I am thus enabled to lock individual doors independently of any others; to keep any number of doors locked while others are open; to lock the doors both open or closed; and these operations may be effected from any desired point in the building. It will also be understood that suitable signaling mechanism may be provided to indicate as by a bell, the condition of any particular door, and that the apparatus as designed is readily available for different types of construction.

By the mechanism described it is impossible to open the door from the inside, while the apparatus is simple and strong in construction, positive and noiseless in operation, and not liable to get out of order.

Having described my invention, what I claim is:

1. Door operating mechanism comprising a rock shaft having a locking bolt and locking and unlocking levers, a door having a bolt socket, a lever-operating abutment mounted on the door adapted to actuate the locking lever, a pivoted lever provided with a lever

operating abutment also mounted on the door adapted to actuate the unlocking lever, and a stationary motor connected with said lever.

2. Door operating mechanism comprising a rock shaft having a locking bolt and locking and unlocking levers, a door having a bolt socket, a lever-operating abutment mounted on the door adapted to actuate the locking lever, a pivoted lever provided with a lever-operating abutment also mounted on the door adapted to actuate the unlocking lever, limiting stops for said lever, and a stationary motor connected with said lever.

3. The combination with a movable door having a bolt opening and a door framing, of a rock shaft mounted on said framing having a bolt and locking and unlocking levers, a cushioned push bolt for one of said levers mounted on the door, a push bolt for the other of said levers mounted on the door, a lever connected with said last named bolt, and a motor for said lever mounted independent of the door.

4. The combination with a movable door having a bolt opening, of a rock shaft mounted in operative relation to the door having a bolt and locking and unlocking levers, a cushioned push bolt for one of said levers mounted on the door, a push bolt for the other of said levers mounted on the door, a lever pivotally mounted on the door and connected with said last named bolt, and a stationary motor having a reciprocable element connected with said lever.

5. The combination of a movable door having a bolt opening, a framing for said door, a rock shaft having a locking bolt adapted to engage said opening and provided with locking and unlocking levers, a cushioned push bolt for the locking lever mounted on the door and adapted to engage said lever when the door is closed, a push bolt for the unlocking lever operable to withdraw the locking bolt at the commencement of the door-opening operation, a lever connected with said last named bolt and pivotally mounted on the door, and a motor mounted independent of the door and connected with said lever, substantially as set forth.

6. The combination of a movable door having a bolt opening, a framing for said door, a locking shaft having a locking bolt adapted to engage said opening and provided with locking and unlocking levers, a cushioned push bolt for the locking lever mounted on the door and adapted to engage said lever when the door is closed, a push bolt for the unlocking lever operable to withdraw the locking bolt at the commencement of the door-opening operation, a lever connected with said last named bolt, stop abutments for said lever adapted to limit its movement in either direction, and a motor mounted independent of the door and connected with said lever, substantially as set forth.

In testimony whereof I hereunto affix my signature in the presence of two witnesses.

DANIEL MORGAN.

Witnesses:
JOHN GINNIFF,
JOHN A. GRADY.