Sept. 20, 1949. N. C. FETTER 2,482,663

CRIBBAGE SCOREKEEPER

Filed July 27, 1946

Fig. 1

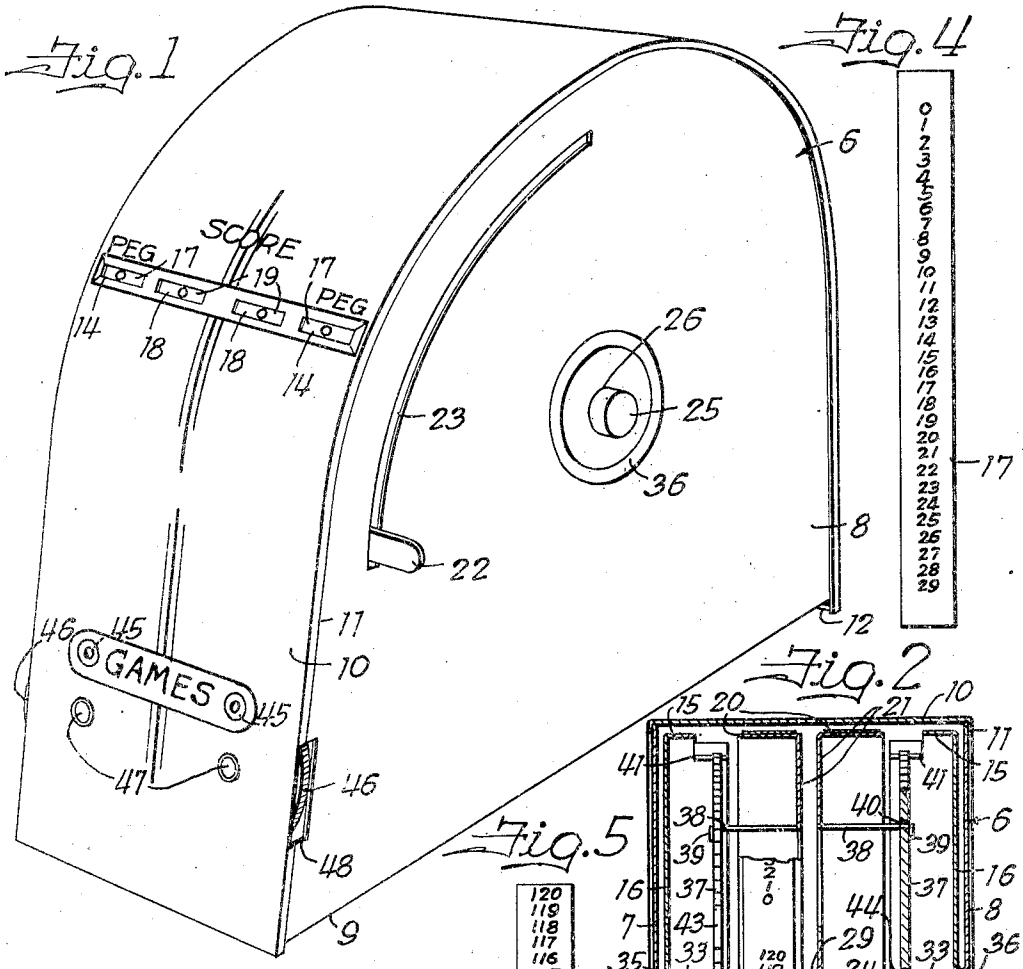

Fig. 4

Fig. 2

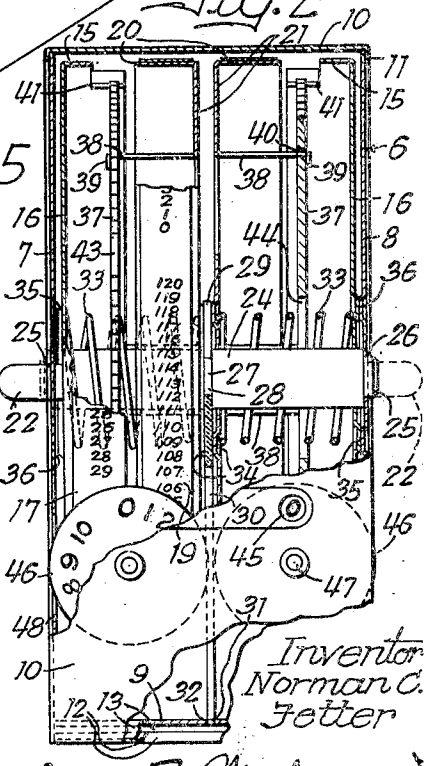

Fig. 5

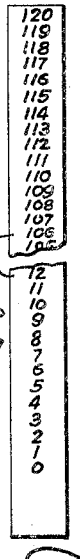

Fig. 3

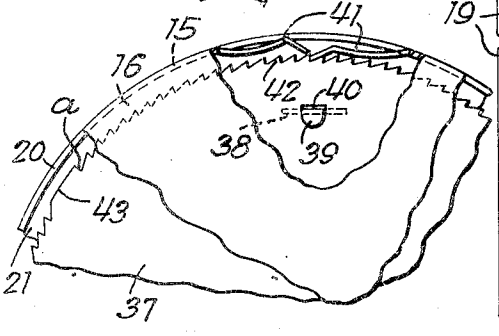

Inventor
Norman C. Fetter

Andrew F. Wintercorn
atty.

Patented Sept. 20, 1949 2,482,663

UNITED STATES PATENT OFFICE

2,482,663

CRIBBAGE SCOREKEEPER

Norman C. Fetter, Freeport, Ill.

Application July 27, 1946, Serial No. 686,642

15 Claims. (Cl. 235—117)

1

This invention relates to a new and improved scorekeeping or tallying device especially designed and adapted for use in connection with the card game of cribbage.

The principal object of my invention is to provide in a single device complete scorekeeping facilities for two players, or two teams of players, in which there is always a numerical indication of the scores thus saving time and avoiding confusion and possible arguments on the part of the players.

A salient feature of the present device is the fact that each gain or increment will be indicated in a window on the device by an advancing drum before the player registers the gain on an accumulator drum, the total score of the individual player or team at any given point in the game being indicated in another window on the device by the accumulator drum. In that way there is no likelihood of a mistake being made in scoring and the opposing players or teams can always see at a glance what the standings are.

Another object is to provide a device of the kind mentioned in which an audible signal is given the player when the accumulated score on the accumulator drum is near the total of 121 required for the game, there being an audible click as each point is registered up to within, say, one point of 121 so that the silience in the registering of the last one point will make it evident at once to the player that he has come to the end of the game.

Another object is to provide a device of the kind mentioned which is of sheet metal construction substantially throughout for lightness and durability as well as low cost.

The invention is illustrated in the accompanying drawing, in which

Fig. 1 is a perspective view of a cribbage scorekeeper made in accordance with my invention;

Fig. 2 is a view partly in front elevation and partly in vertical section, the pair of drums on the left side having enough of their numbered peripheries showing to illustrate the relationship in their numbering and also the relationship between the smooth portion of the ratchet wheel and the numbering on the accumulator drum, and the pair of drums on the right side being shown entirely in section to better illustrate the operative relationship of the drums to one another and how the accumulator drum is arranged to be actuated with its ratchet wheel by the spring tooth on the advancing drum and is arranged to be held frictionally in each advanced position;

Fig. 3 is a fragmentary side view of the right hand pair of drums to better illustrate the operating connection between the advancing drum and accumulator drum and also to show the smooth end portion of the ratchet wheel which

2

is relied upon to signal the imminent end of the game, and

Figs. 4 and 5 are face views of the scales applied to the peripheries of the advancing drum and accumulator drum, respectively, a portion of the scale in Fig. 5 being broken away.

The same reference numerals are applied to corresponding parts in these five views.

Referring to the drawing, the reference numeral 6 designates generally the housing of the cribbage scorekeeper which comprises a generally U-shaped sheet metal frame providing parallel vertical side walls 7 and 8 interconnected by a horizontal bottom wall 9, and a sheet metal cover 10 which is arched to conform to the arcuate shape of the upper end of the side walls 7 and 8 and has narrow inwardly bent flanges 11 on the opposite longitudinal edges which abut the outside of the side walls to keep the cover properly located with respect to these side walls and has inwardly and upwardly bent end portions 12 which are clinched behind the downwardly projecting flanges 13 provided on the front and rear ends of the bottom wall 9 to fasten the cover in assembled relation to the rest of the housing 6. Two windows 14 marked "Peg" are provided in the cover 10 adjacent the rims 15 of a pair of advancing drums 16 which carry scales 17 numbered from "0" to "29," as shown in Fig. 4, because in the card game of cribbage the score is increased during the game by increments varying from "1" to "29," the scoring being designated by the term "peg" which accounts for the caption "Peg" appearing adjacent the windows 14. Another pair of windows 18 is provided in the cover 10 through which may be seen scales 19 provided on the rims 20 of accumulator drums 21, these scales 19 being numbered from "0" to "120," as shown in Fig. 5, the number of points required for a game of cribbage being 121. As will soon appear, each of the two players or the two teams of players will be assigned one or the other of the pair of windows 14 and 18 for scorekeeping purposes and each gain or increment will first be registered in the "Peg" window 14 by the turning of the assigned advancing drum 16 by means of a lever 22 projecting laterally from the drum through an arcuate slot 23 provided in the adjacent side wall 7 or 8 of the housing 6, both of the drums 16 being provided with these lever projections and both side walls 7 and 8 having the arcuate slots 23 through which these levers extend for manual operation, as indicated in Fig. 2. Now, assuming, let us say, 5 points are to be pegged by a player or team, the appropriate drum 16 will be turned by upward movement of the lever 22 until the numeral "5" appears in the window 14. Then, assuming that player of team has already accumulated a score of, say, 100, the numeral "100" will appear in the companion

window 18 and upon downward movement of the lever 22 back to its starting point the accumulator drum 21 will be turned to the extent of 5 points, the number of points pegged, and the score then appearing in window 18 will, of course, be "105." The slot 23 is long enough to permit pegging anywhere from 1 to 29 points at a time, 29 points being the most that a player or team can gain at a time in a game of cribbage.

The shaft 24, upon which the two pairs of drums 16 and 21 are mounted for rotation, has reduced trunnion end portions 25 received in bearing holes 26 in the side walls 7 and 8 of the housing 6. This keeps the side walls properly spaced at all times and in snug engagement with the flange 11. An annular groove 27 is provided in the shaft 24 at the middle to provide a reduced middle bearing portion 28 concentric with the end portions 25 having a close working fit in the lower end of a vertical slot 29 provided in a vertical partition 30 that is disposed in the middle of the housing 6 in parallel relation to the side walls 7 and 8 and has a tongue 31 on the lower end thereof fitting snugly in a slot 32 provided in the middle of the bottom wall 9 of the housing 6. This partition 30 is therefore rigidly supported in fixed spaced relation to the side wall 7 and 8. It is fairly narrow and made from a sheet of hard fibre and serves as a friction member to hold the accumulator drums 21 frictionally in whatever positions they may have been moved to by operation of their companion advancing drums 16. The two drums 16 and 21 of each pair are urged apart by a coiled compression spring 33 assembled between the drums around the shaft 24 in compressed condition and bearing at one end in the central circular embossed portion 34 on the drum 21 and at the other end in a similarly embossed central circular portion 35 provided on the drum 16. The drums are held against turning from adjusted position because portions 34 bear against the opposite sides of the friction member 30 and portions 35 bear against inwardly embossed circular frictional abutment portions 36 provided on the side walls 7 and 8 in concentric relation to the bearing holes 26. Obviously, the circular recesses provided in the embossed portions 34 and 35 serve to keep the springs 33 in substantially concentric relation to the shaft 24, and there is so little frictional resistance to turning of either drum with respect to the spring 33 that there is no danger of transmitting rotation from one drum to the other through the spring. Pawl and ratchet means are provided for positively turning the accumulator drums by rotation of the advancing drums in one direction. Each of the accumulator drums 21 carries a ratchet wheel 37 on four lugs 38 which are struck from the sheet metal of these drums in equally circumferentially spaced relation and have narrow end portions 39 entered in slots 40 provided in the ratchet wheels, the projecting end portions being bent at right angles, as clearly appears in Fig. 2, to provide a permanent and secure connection. Holes 44 in the centers of the ratchet wheels 37 afford ample operating clearance for the springs 33. The advancing drums 16 have resilient spring tooth portions 41 struck from the peripheral flanges 15 thereof adapted to ride on the periphery of the ratchet wheels 37 in the manner shown in Fig. 3, so that either right or left hand drive may be used. In other words, two of these spring teeth 41 are provided on each drum extending toward one another so that one of these teeth will be active for the right hand drum 16, namely, the right hand tooth in Fig. 3, whereas the other tooth is the active tooth on the left hand drum, the "idle" tooth in both cases being arranged either to ride idly over the teeth of the ratchet wheel, giving nothing more than frictional drag, or be cut off or bent out of the way. The drive tooth 41 clicks freely over the teeth of the ratchet wheel when the advancing drum 16 is turned in the pegging direction to register the number of points gained, which, as stated before, may be anywhere from one to twenty-nine points at a time. However, in the return movement of the drum 16 the drive tooth 41 turns the ratchet wheel 37 and accumulator drum 21 with it so as to advance the accumulator drum the registered number of points. Now, the scales 17 and 19 have their numbers spaced alike, but, as indicated at the left in Fig. 2, the numbering on scale 17 is in one direction and the numbering on scale 19 in the other direction. The ratchet wheels 37 have the teeth 42 thereof spaced to correspond to the spacing of the numbers "1" to "29" and "0" to "120" on the scales 17 and 19, respectively. The teeth 42 are spaced so that 124 teeth would take up the full circumference of each ratchet wheel. However, the cutting of three teeth is omitted, as indicated at 43 in Fig. 3, so as to give a total of 121, to correspond with the total score of the card game of cribbage, the smooth portion 43 constituting the last tooth. With this construction there is obtained a clearly audible click in the pegging of each of 120 points, and an easily noticeable silence as the drive tooth 41 rides over the long blank tooth or dwell 43. This signal 43 tells the player when he has reached the 121 score which is the end of the game. Assuming, for example, that the player or team has already accumulated a score of 100 and makes a gain of 25 points; under these conditions, as the lever 22 is raised to "Peg" the 25 points gained, there will be a clicking sound as the active tooth 41 rides over the teeth on the ratchet 42 for only the first twenty points, and, immediately thereafter, further movement of the lever 22 does not produce the corresponding clicking sound and the operator, therefore knows that the game is ended. When the drive tooth 41 is moved to the first tooth "*a*" beyond the smooth dwell portion 43 on the ratchet wheel 37 and the lever 22 is pushed down, the accumulator drum 21 registers "0" in the window 18.

Another pair of windows 45 is provided in the cover 10 through which numbers on dials 46 may be seen, indicating the number of games won by each player or team. The dials 46 are suitably supported on the inside of the cover for rotation on axles 47 and they project through slots 48 provided in the side walls 7 and 8 of the housing to permit manual operation thereof.

In operation, assuming that all of the drums 16 and 21 register "0" and the dials 46 also register "0" for the start of a game of cribbage, the drive teeth 41 on the advancing drums 16 are, under these conditions, in engagement with the first tooth 42 on the ratchet wheels 37, namely, at the point marked "*a*" in Fig. 3. The first player or team to record a score does so by raising the lever 22 of its assigned advancing drum 16 to an extent where the specified number of points to be pegged are indicated in the window 14 whereupon the lever 22 is pushed down so as to have that number of points show in the window 18 as having been registered on the accumulator drum 21. For each gain of points thereafter the lever 22 is raised to show the specified number of points in the window 14 and then is pushed down again so as

to add that number of points to the number of points appearing on the accumulator drum. The frictional resistance to turning of the accumulator drum eliminates any danger of the accumulator drum turning in a backward direction with the advancing drum in the upward movement of the lever **22**. In other words, there is more friction resistance to turning of either of the accumulator drums **21** by reason of their engagement with the friction member **30** than is traceable to the engagement of the springs **33** with the advancing drums **16**, and hence, the advancing drums can be turned relative to the accumulator drums in the manner stated. When the score in one of the windows **18** is near the total of 121 required for the game, the operator in raising the lever **22** should exercise caution so as not to allow the drive tooth **41** on the advancing drum to ride past the tooth "*a*" on the ratchet wheel **37**, because then there would be some number other than "0" recorded in the window **18** when the lever **22** was returned to the lower end of the slot **23**, which would make it necessary to continue advancing the drum **21** through the rest of a complete revolution to reach "0" a second time. So long as the operator hears the clicking sound as he raises the lever **22**, he knows that the total score with the additional points he is registering is still below 121. When the player or team has won a game, the appropriate dial **46** is turned to register "1" in the window **45**, and, of course, the losing player or team makes whatever adjustment is necessary to bring its indicated score in the window **18** back to "0" for the start of the next game, thus if they had "115" showing in the window **18**, it is obvious that by pegging 6 points by upward movement of the lever **22**, the smooth portion **43** on the ratchet wheel **37** would be reached and then the lever **22** would be raised still farther enough to bring about engagement of the drive tooth **41** with the first tooth "*a*" beyond the smooth portion **43**, which operation would be indicated by a click, whereupon the lever **22** is then returned to the lower end of the slot **23** to register "0" in the window **18**.

It is believed the foregoing description conveys a good understanding of the objects and advantages of my invention. The appended claims have been drawn to cover all legitimate modifications and adaptations.

I claim:

1. In a scorekeeping device of the character described, a U-shaped sheet metal frame providing a bottom and opposed side walls for housing a scoring mechanism, a horizontal cross-shaft having reduced end portions received in holes provided therefor in said side walls, the reduced portions defining annular shoulders on the shaft ends abutting the inside of said side walls to prevent inward displacement thereof, scorekeeping elements mounted on the shaft for rotation, means for turning said elements, and a sheet metal cover of inverted generally U-shape fitting over and secured to said frame and providing front, top and back walls for housing the scoring mechanism, the side portions of said cover being defined by inwardly projecting flanges abutting the outside of said side walls to prevent outward displacement thereof and said cover having window openings provided therein through which the scorekeeping elements are visible.

2. A scorekeeping device as set forth in claim 1, wherein there are two pairs of scorekeeping elements rotatably mounted on said shaft, said device including spring means between the elements

of each pair to urge the same apart for frictional contact of one element of each pair with the inner side of the side walls, and a middle partition wall in said frame between the two pairs of elements and frictionally engaged on opposite sides by one element of each pair under the action of said spring means.

3. A scorekeeping device as set forth in claim 1, wherein there are two pairs of scorekeeping elements rotatably mounted on said shaft, said device including spring means between the elements of each pair to urge the same apart for frictional contact of one element of each pair with the inner side of the side walls, the shaft having a transverse groove provided therein intermediate its ends, and a friction member located in said groove and frictionally engaged on opposite sides by one element of each pair under the action of said spring means.

4. A device as set forth in claim 1, wherein said shaft has an annular groove provided therein at an intermediate point aligned vertically with a slot in the bottom wall, the device including a partition member between the side walls of the housing fitting in said groove and slot and supported thereby in fixed spaced relation to the side walls.

5. A device as set forth in claim 1, wherein said shaft has an annular groove provided therein at an intermediate point aligned vertically with a slot in the bottom wall, the device including a partition member between the side walls of the housing fitting in said groove and slot and supported thereby in fixed spaced relation to the side walls, there being two pairs of scorekeeping elements rotatably mounted on said shaft, said device including spring means between the elements of each pair to urge the same apart for frictional contact of one element of each pair with the inner side of the side walls, the other element of each pair being held under the spring pressure in frictional engagement with the partition member.

6. In a scorekeeping device of the character described, a U-shaped sheet metal frame providing a bottom and opposed side walls for housing a scoring mechanism, a horizontal cross-shaft having reduced end portions received in holes provided therefor in said side walls, the reduced portions defining annular shoulders on the shaft ends abutting the inside of said side walls to prevent inward displacement thereof, the front and rear ends of the bottom wall having downwardly projecting flanges, a sheet metal cover of inverted generally U-shape fitting over said frame and providing front, top and back walls for housing the scoring mechanism, the side portions of said cover being defined by inwardly projecting flanges abutting the outside of said side walls to prevent outward displacement thereof, the lower end portions of said front and back walls overlapping the aforesaid downwardly projecting flanges on the bottom wall and having inwardly and upwardly bent portions for securing the cover to said frame on said downwardly projecting flanges, scorekeeping elements mounted on said shaft for rotation and visible through window openings provided in said cover, and means for turning said elements.

7. In a scorekeeping device, the combination of a support, an accumulator drum rotatably mounted on said support bearing indicia running in one direction and covering the full range of scoring for a game, an advancing drum rotatably mounted on said support in coaxial relation to the accumulator drum and bearing indicia running in

the opposite direction and covering the range of points scorable at any one time in a game, means to hold the drums normally in adjusted position, a cover on said support having windows through which the indicia on said drums may be viewed, manually operable means for turning the advancing drum in one direction to register the number of points gained and back again to "0" position, and pawl and ratchet means interconnecting said drums whereby the accumulator drum is turned with the other drum only in the return movements thereof.

8. In a cribbage scorekeeping device, the combination of a support, two accumulator drums rotatably mounted on said support bearing indicia running in one direction covering the full range of scoring for a game of cribbage, an advancing drum associated with each accumulator drum rotatably mounted on said support in coaxial relation to the accumulator drum and bearing indicia running in the opposite direction and covering the range of points scorable at any one time in a game of cribbage, means to hold the drums normally in adjusted position, a cover on said support having windows through which the indicia on said drums may be viewed, manually operable means for turning either advancing drum in one direction to register the number of points gained and back again to a "0" position, and pawl and ratchet means interconnecting each accumulator drum with its associated advancing drum, whereby the accumulator drums are turned with the advancing drums only in the return movements thereof.

9. In a cribbage scorekeeping device, the combination of a support, two accumulator drums rotatably mounted on said support bearing indicia covering the full range of scoring for a game of cribbage, an advancing drum associated with each accumulator drum rotatably mounted on said support in coaxial relation to the accumulator drum and bearing indicia covering the range of points scorable at any one time in a game of cribbage, means to hold the drums normally in adjusted position, a cover on said support having windows through which the indicia on said drums may be viewed, manually operable means for turning either advancing drum in one direction to register the number of points gained and back again to a "0" position, and pawl and ratchet means interconnecting each accumulator drum with its associated advancing drum.

10. In a scorekeeping device, the combination of a support, an accumulator drum rotatably mounted on said support bearing indicia covering the full range of scoring for a game, an advancing drum rotatably mounted on said support in coaxial relation to the accumulator drum and bearing indicia covering the range of points scorable at any one time in a game, a coiled compression spring urging said drums apart toward frictional contact with surfaces on the support, whereby frictionally to resist turning of said drums from adjusted positions, a cover on said support having windows through which the indicia on said drums are visible, means for turning the advancing drum first in one direction to register in one of said windows the number of points gained and to be scored at any given time and then back again to a "0" position, and pawl and ratchet means interconnecting said drums.

11. In a cribbage scorekeeping device, the combination of a support, two accumulator drums rotatably mounted on said support bearing indicia

running in one direction and covering the full range of scoring for a game of cribbage, an advancing drum associated with each accumulator drum rotatably mounted on said support in coaxial relation to the accumulator drums and bearing indicia running in the opposite direction and covering the range of points scorable at any one time in a game of cribbage, a coiled compression spring between each pair of associated drums urging the same apart toward frictional contact with surfaces on the support, whereby frictionally to resist turning of said drums from adjusted positions, a cover on said support having windows through which the indicia on said drums are visible, means for turning the advancing drum first in one direction to register in one of said windows the number of points gained and to be scored at any given time and then back again to a "0" position, and pawl and ratchet means interconnecting each accumulator drum with its associated advancing drum, whereby the accumulator drums are turned by the advancing drums only in the return movements thereof.

12. A device as set forth in claim 9 wherein the pawl and ratchet means comprises a ratchet wheel fixed to and turning with each accumulator drum having the circumference thereof formed to provide one hundred-twenty teeth and a smooth blank portion between the one hundred-twentieth tooth and the first tooth, the teeth of each of said ratchet wheels being spaced to correspond with the spacing of the indicia on the drums.

13. A scorekeeping device as set forth in claim 8, wherein the advancing drum is of sheet metal construction and has an annular flange provided thereon, and wherein the pawl and ratchet means comprises for its pawl portion a spring tooth formed from a portion of said flange and arranged to ride over the teeth of a ratchet wheel mounted on the accumulator drum and forming the ratchet portion of the pawl and ratchet means.

14. A scorekeeping device as set forth in claim 8, wherein the advancing drum is of sheet metal construction and has an annular flange provided thereon, and wherein the pawl and ratchet means comprises for its pawl portion a spring tooth formed from a portion of said flange and arranged to ride over the teeth of a ratchet wheel mounted on the accumulator drum and forming the ratchet portion of the pawl and ratchet means, the ratchet wheel having teeth throughout the major portion of the circumference thereof but having a smooth blank portion interconnecting the first and last teeth.

15. A scorekeeping device as set forth in claim 8, wherein the pawl and ratchet means comprises for its ratchet portion a ratchet wheel fixed to and turning with the accumulator drum, said ratchet wheel having teeth throughout the major portion of the circumference thereof and having a smooth blank portion interconnecting the first and last teeth.

NORMAN C. FETTER.

REFERENCES CITED

The following references are of record in the file of this patent:

UNITED STATES PATENTS

Number	Name	Date
204,404	Wessmann	May 28, 1878
471,593	Youlin	Mar. 29, 1892
1,347,014	Corliss	July 20, 1920