No. 644,528. Patented Feb. 27, 1900.

R. G. MARCY.

ROLLER BEARING FOR WINDMILL SHAFTS.

(Application filed June 12, 1899.)

(No Model.)

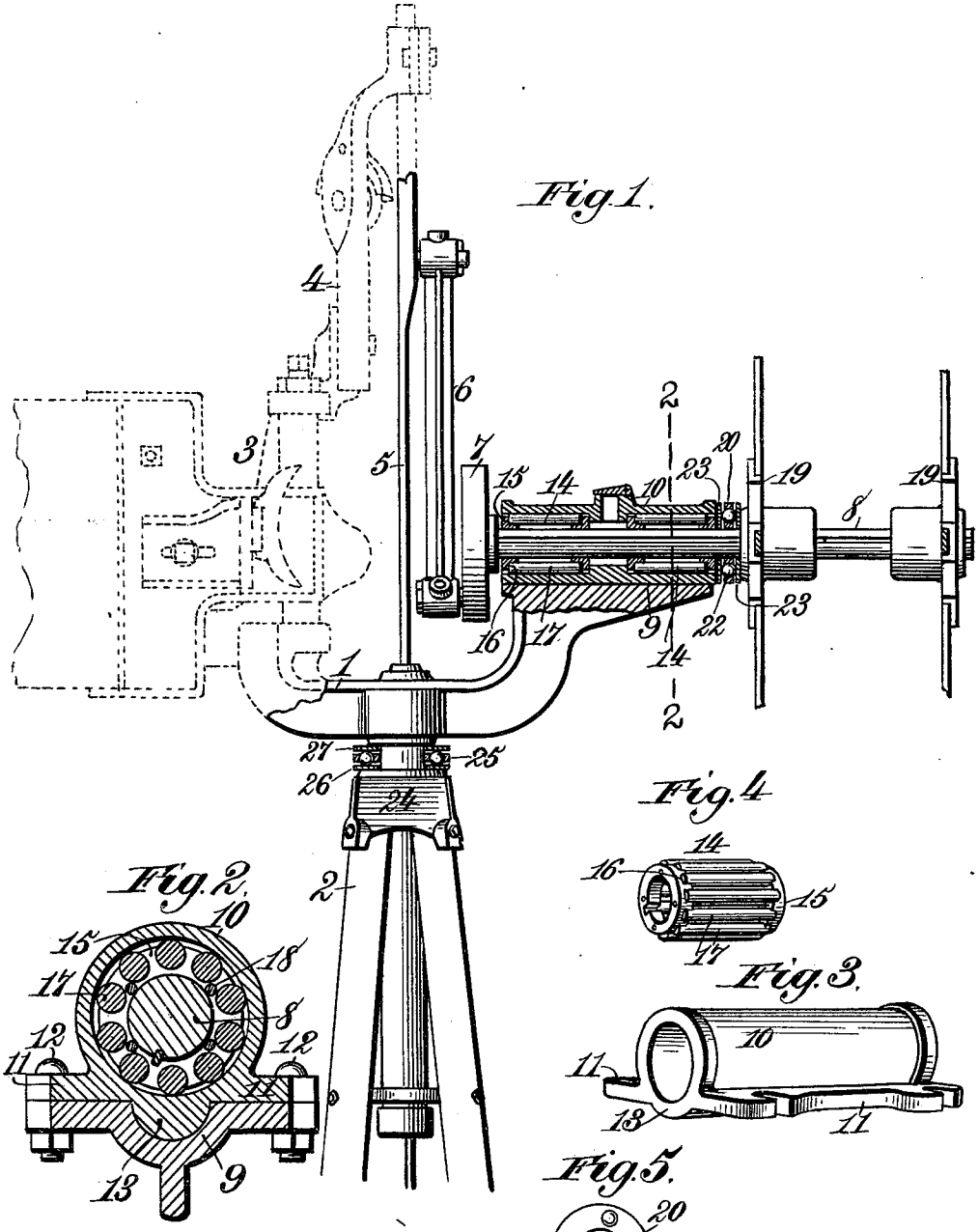

Witnesses.
Robert Everett,
F. B. Keefe.

Inventor.
Rufus G. Marcy.
By James L. Norris
Atty.

THE NORRIS PETERS CO., PHOTO-LITHO., WASHINGTON, D. C.

UNITED STATES PATENT OFFICE.

RUFUS G. MARCY, OF BLUFFTON, INDIANA.

ROLLER-BEARING FOR WINDMILL-SHAFTS.

SPECIFICATION forming part of Letters Patent No. 644,528, dated February 27, 1900.

Application filed June 12, 1899. Serial No. 720,213. (No model.)

To all whom it may concern:

Be it known that I, RUFUS G. MARCY, a citizen of the United States, residing at Bluffton, in the county of Wells and State of Indiana, have invented new and useful Improvements in Roller-Bearings for Windmill-Shafts, of which the following is a specification.

This invention relates to combined roller and ball bearings for windmill-shafts, and has for its object to provide a bearing of the character referred to that may be readily applied to windmills already constructed, wherein a sectional journal-box is employed as a bearing for the windmill-shaft, as well as to those windmills especially constructed with a view to employing the improved bearing.

It also has for its object to provide an improved antifriction-bearing for the turn-table of the windmill.

To this end my invention consists in the features and in the construction, combination, and arrangement of parts hereinafter described, and particularly pointed out in the claims following the description, reference being had to the accompanying drawings, forming a part of this specification, wherein—

Figure 1 is a sectional elevation of a portion of a windmill equipped with my improved attachment. Fig. 2 is a transverse section on the line 2 2 of Fig. 1 on a slightly-enlarged scale. Fig. 3 is a detail view of the sleeve or journal-box. Fig. 4 is a view of one of the cages and its rolls, and Fig. 5 is a view of the annulus for holding the antifriction-balls.

Referring to the drawings, the numeral 1 indicates the yoke-frame of a windmill of well-known construction, rotatably mounted on the upper end of the tower-frame 2. The yoke-frame 1 is provided with a bracket 3 for the attachment of the wind-vane and with a bracket-arm 4, in which is adapted to reciprocate the upper end of the pump-rod 5, to which latter is connected one end of the pitman 6, the other end thereof being pivoted to a wrist-pin on the wheel 7, mounted on one end of the windmill-shaft 8. The yoke-frame has also formed with it a half-bearing or journal-box 9. In the usual construction this bearing comprises the fixed or rigid half-box 9 and a similar removable half-box which fits thereover, both the half-boxes being provided at their adjacent edges with laterally-projecting flanges, by means of which the two half-boxes are bolted together to form a bearing for the windmill-shaft 8.

All of the above parts are of well-known and usual construction and are only thus briefly pointed out to render the present invention more readily understood. In carrying my invention into effect the removable half-box is detached from the half-box 9 and my improved attachment substituted therefor, and which I will now describe.

The numeral 10 indicates a sleeve or journal-box having a flat base adapted to rest upon the flat upper side of the half-box 9, the windmill-shaft 8 being first removed and provided at its opposite edges with laterally-projecting flanges 11, which register with corresponding flanges on the half-box and to which latter they are adapted to be firmly bolted by bolts 12. Formed centrally on the under side of the flat base of the sleeve or journal-box 10 is a longitudinal rib 13, semicircular in cross-section, which is adapted to seat in the semicircular bearing in the half-box in which the windmill-shaft was previously journaled. This insures the accurate alinement of the sleeve or journal-box and also aids in preventing any lateral displacement thereof.

The numerals 14 14 indicate two roller-bearings inserted in the opposite ends of the sleeve or journal-box and each comprising two circular heads or disks 15, in the outer edges of the inner or adjacent faces of which are formed semicircular recesses or sockets 16. In the recesses 16 are loosely arranged the ends of rollers 17, which are of such diameter that their peripheries project beyond the peripheries of the heads. The heads 15 are held at the proper distance apart and rigid relatively to one another by rods 18, screwed at their opposite ends into or otherwise suitably secured to the heads. The heads 15 are each centrally apertured for the passage therethrough of the windmill-shaft, and when the roller-bearings are in place in the ends of the sleeve and the windmill-shaft is journaled in the former the rollers have a rolling bearing on both the shaft and the interior of the sleeve or journal-box, thereby reducing the friction to a minimum.

The numeral 19 indicates the hub or spider of the wind-wheel, which is splined or keyed upon the end of the shaft 8, and loosely ar-

ranged on the latter, between the hub or spider and the end of the sleeve or box 10, is a thin annulus 20, provided with a plurality of perforations 21, disposed at equal distances apart. Loosely seated in said perforations are antifriction-balls 22, which project beyond the opposite faces of the annulus and have a rolling bearing against washers 23, inserted between the end of the sleeve or box and the annulus and between the latter and the hub or spider.

To apply the attachment to a windmill already constructed and provided with the old type of bearing before referred to, the removable half-box is detached from the half-box 9 and the windmill-shaft removed. The sleeve or box 10, with its rollers in place, and the ball-bearing are next slipped onto the shaft and the sleeve or box firmly bolted to its seat on the half-box 9, after which the windmill is firmly keyed up into place on the shaft. The ball-bearing receives the entire end thrust of the shaft and, together with the roller-bearings, causes the shaft to rotate with the very least possible amount of friction.

On the apex of the tower-frame 2 is fitted a cap 24, and between said cap and the yoke-frame is disposed a perforated annulus 25, in which are seated antifriction-balls precisely in the manner described with reference to the annulus 20. Said annulus and antifriction-balls constitute a ball-bearing between the cap and the yoke-frame to cause the latter to rotate easily. The cap 24 is of ordinary construction and is commonly employed in windmills of the type shown and described in this application. On the cap 24 is seated a collar 26, having a smooth upper face to provide a surface on which the antifriction-ball may easily rotate or roll, and a similar collar having a smooth under face is disposed between the balls and the yoke-frame of the windmill to permit the easy rotation of the latter as the wind shifts. This turn-table bearing may be attached to any modern windmill, whether already constructed and in use or whether constructed especially for its use.

Having described my invention, what I claim is—

1. A bearing attachment for windmill-shafts comprising a sleeve or journal-box having a flat base provided with lateral flanges arranged to be attached to the flanges of the half-box of the yoke-frame, cages fitted in the opposite ends of the sleeve or journal-box, and rollers journaled at their opposite ends in the ends of the cages, substantially as described.

2. A bearing attachment for windmill-shafts comprising a sleeve or journal-box having a flat base provided with means for attaching the same to the flanges of the half-box of the yoke-frame, a longitudinal rib formed centrally on the bottom of the flat base, cages fitted in the opposite ends of the sleeve or journal-box, and rollers journaled at their opposite ends in the ends of the cages, substantially as described.

3. A bearing attachment for windmill-shafts comprising a sleeve or journal-box constructed for attachment to the half-box of the yoke-frame, cages fitted in the opposite ends of the sleeve or journal-box and each consisting of two annular heads rigidly held apart by rods and provided on the edges of their adjacent faces with recesses, and rollers loosely journaled at their opposite ends in said recesses, substantially as described.

4. A bearing attachment for windmill-shafts comprising a sleeve or journal-box constructed for attachment to the half-box of the yoke-frame, cages fitted in the opposite ends of the sleeve or journal-box, and rollers journaled at their opposite ends in the ends of the cages, in combination with an annulus adapted to be slipped over the shaft between the end of the sleeve or journal-box and provided with a plurality of perforations, and antifriction-balls seated in said perforations and projecting beyond the opposite faces thereof, substantially as described.

In testimony whereof I have hereunto set my hand in presence of two subscribing witnesses.

RUFUS G. MARCY.

Witnesses:
S. E. HITCHCOCK,
JACOB J. TODD.