(11) Application No. AU 2002254952 B2

(19) AUSTRALIAN PATENT OFFICE

(54) Title
Mounting tray for IDC junction modules

(51)6 International Patent Classification(s)
H01R 13/518 060101BHAU
(2006.01) H04Q 1/14
H04Q 1/14 20060101ALI20
(2006.01) 060101BHAU
H01R 13/518 PCT/EP02/0292
20060101AFI20 9

(21) Application No: 2002254952 (22) Application Date: 2002.03.15

(87) WIPO No: WO02/075857

(30) Priority Data

(31) Number (32) Date (33) Country
201 04 606.7 2001.03.16 DE

(43) Publication Date : 2002.10.03
(43) Publication Journal Date : 2003.03.27

(71) Applicant(s)
3M Innovative Properties Company

(72) Inventor(s)
Lindenbeck, Bernd; Gaertner, Norbert; Denter, Friedrich; Schluter, Dietrich

(74) Agent/Attorney
Spruson & Ferguson, Level 35 St Martins Tower 31 Market Street, Sydney, NSW, 2000

(56) Related Art
US 5806687

(12) INTERNATIONAL APPLICATION PUBLISHED UNDER THE PATENT COOPERATION TREATY (PCT)

(19) World Intellectual Property Organization
International Bureau

(43) International Publication Date
26 September 2002 (26.09.2002)

PCT

(10) International Publication Number
WO 02/075857 A1

(51) International Patent Classification[7]: H01R 13/518, H04Q 1/14

(21) International Application Number: PCT/EP02/02929

(22) International Filing Date: 15 March 2002 (15.03.2002)

(25) Filing Language: English

(26) Publication Language: English

(30) Priority Data:
201 04 606.7 16 March 2001 (16.03.2001) DE

(71) Applicant *(for all designated States except US)*: **3M INNOVATIVE PROPERTIES COMPANY** [US/US]; PO Box 33427, St. Paul, MN 55133-3427 (US).

(72) Inventors; and

(75) Inventors/Applicants *(for US only)*: **LINDENBECK, Bernd** [DE/DE]; Fochrenstrasse 14, 42283 Wuppertal (DE). **DENTER, Friedrich** [DE/DE]; Mittelstrasse 27, 44575 Castrop-Rauxel (DE). **SCHLÜTER, Dietrich** [DE/DE]; Buerboomweg 76, 46284 Dorsten (DE). **GAERTNER, Norbert** [DE/DE]; Margaretenstrasse 22, 42285 Wuppertal (DE).

(74) Agents: **HOFFMANN EITLE** et al.; Arabellastrasse 4, 81925 München (DE).

(81) Designated States *(national)*: AE, AG, AL, AM, AT, AU, AZ, BA, BB, BG, BR, BY, BZ, CA, CH, CN, CO, CR, CU, CZ, DE, DK, DM, DZ, EC, EE, ES, FI, GB, GD, GE, GH, GM, HR, HU, ID, IL, IN, IS, JP, KE, KG, KP, KR, KZ, LC, LK, LR, LS, LT, LU, LV, MA, MD, MG, MK, MN, MW, MX, MZ, NO, NZ, OM, PH, PL, PT, RO, RU, SD, SE, SG, SI, SK, SL, TJ, TM, TN, TR, TT, TZ, UA, UG, US, UZ, VN, YU, ZA, ZM, ZW.

(84) Designated States *(regional)*: ARIPO patent (GH, GM, KE, LS, MW, MZ, SD, SL, SZ, TZ, UG, ZM, ZW),

[Continued on next page]

(54) Title: MOUNTING TRAY FOR IDC JUNCTION MODULES

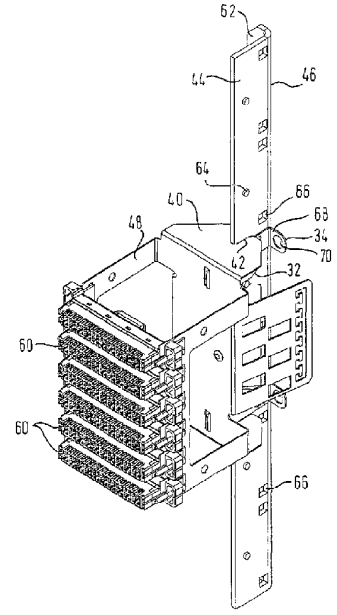

(57) Abstract: A mounting tray (10) for mounting IDC junction modules to a mounting rail (46) in a telecommunications rack, the mounting tray comprising: (a) a tray (14) adapted to hold one or more IDC junction modules (b) at least one transverse positioning member (40) for positioning the tray in a transverse orientation with respect to the mounting rail (46), and attached thereto, (c) at least one detachable fastener (12) that provides detachable attachment of the mounting tray (10) to the mounting rail (46) through one or more fastening means (38, 32) configured to permit attachment to one or more complementary features (64, 66) on the mounting rail (46).

WO 02/075857 A1

Eurasian patent (AM, AZ, BY, KG, KZ, MD, RU, TJ, TM), European patent (AT, BE, CH, CY, DE, DK, ES, FI, FR, GB, GR, IE, IT, LU, MC, NL, PT, SE, TR), OAPI patent (BF, BJ, CF, CG, CI, CM, GA, GN, GQ, GW, ML, MR, NE, SN, TD, TG).

Published:

— *with international search report*

— *before the expiration of the time limit for amending the claims and to be republished in the event of receipt of amendments*

For two-letter codes and other abbreviations, refer to the "Guidance Notes on Codes and Abbreviations" appearing at the beginning of each regular issue of the PCT Gazette.

Mounting Tray for IDC Junction Modules

Field of the Invention

The invention relates to a mounting tray for IDC junction modules.

Background

Telecommunications and data systems often require connection of incoming and outgoing cables by "patch" connections. For such purpose, junction modules may be employed. Many junction modules provide connections for incoming and outgoing cables on one side of the module, and, on the other side, provide connections for patching lines. Junction modules may use different means for making electrical connections to the cables and patching lines, but insulation-displacement-type ("IDC") or "wire-wrap" type connectors are commonly used. Many of these modules may be required provide the needed connections within a distribution system, so it is necessary to organize and house junction modules in a compact and efficient arrangement in racks or frames.

Various appliances or mounting trays have been developed for mounting junction modules to the racks or frames used in telecommunication distribution systems. For example, DE 298 07 669 U1, DE 299 03 640 U1, DE 197 10 000 C1, U.S. Pat. 5,595,507 and DE 38 13 078 A1 describe various mounting trays suitable for mounting several IDC junction modules. DE 89 14 909 U1 describes a tray for a wire-wrap connector.

Summary of the Invention

The invention provides a mounting tray adapted for mounting IDC junction modules to a mounting rail in a telecommunications rack or frame, the mounting tray comprising: (a) a tray for holding one or more IDC junction modules, (b) at least one transverse positioning member for positioning the tray in the desired, transverse orientation with respect to the mounting rail, and, (c) at least one detachable fastener that provides detachable attachment of the mounting tray to the mounting rail through one or more fastening means configured to permit attachment to one or more complementary features on the mounting rail.

The invention further provides telecommunications racks comprising one or more mounting trays in accordance with the invention.

The tray for holding one or more IDC junction modules is adapted to mount IDC junction modules. Various configurations of the tray are possible, for example, one useful configuration of the tray is a trough-like member with a bottom portion, two sidewall portions and two open-end

portions. The sidewalls of such construction can be solid (for example, walls formed by bending a piece of sheet metal), or the walls may have a more open construction, such as a frame-like shape. For example, one frame-like shape comprises a horizontal, top rail connected to two, vertical side rails which are each connected to the bottom portion of the tray. The bottom portion of the tray may also be solid or more open in construction. It is generally preferred that the sidewalls have a more open configuration to economize on materials of construction and permit simple and uncluttered insertion of cables (and their wires) into the IDC junction modules from the side. Along the sidewall portions various accommodation may be provided for latching or mounting IDC junction modules. For example, over-hanging edges, recesses or openings located along the top of the sidewall portions may be used to complementarily communicate with latches, hooks or other features, for example, on IDC junction blocks to fix them (usually detachably) to the mounting tray.

The transverse positioning member is configured to permit positioning of the mounting tray in the desired, transverse orientation with respect to the mounting rail. The transverse positioning member limits the tilting of the mounting tray from its desired transverse orientation to the mounting rail, for example, as may occur if a force were applied to the mounting tray. Accordingly, the transverse positioning member is advantageously configured to complementarily fit in a snug or relatively close fitting arrangement around at least part of a mounting rail to help prevent the member from rotating or tilting with respect to the rail.

For example, in one embodiment, the transverse positioning member comprises at least one slot configured to accommodate at least one leg of a mounting rail. Typically, such leg would be projecting toward the front of the mounting rail (i.e., this direction being the same as the front of the mounting rack when the mounting rail is installed in the mounting rack). In such embodiment, the width of the slot is at least sufficient to accommodate the width of the projecting leg, and the depth of the slot can be easily selected for a particular embodiment to promote maintenance of transverse orientation of the mounting tray. In a preferred embodiment, the mounting tray of the invention has two transverse positioning members, each with a slot configured to accommodate a single projecting leg of a mounting rail.

The tray (a) and the transverse positioning member(s) (b), and detachable fastener (c) can be separate components of the mounting tray that are all connected together to form the mounting tray. Preferably, however, the tray (a) and transverse positioning member(s) (b) form an integral structure, whilst the detachable fastener is a separate component mounted to the integral structure (of the tray and transverse positioning member(s)).
In either case, however, the detachable fastener is in communication with the bottom portion of the tray, on the side opposite the sidewalls. Preferably, the detachable fastener extends away from the bottom portion of the tray in a direction that is substantially perpendicular to the plane of the bottom portion of the tray. It is also preferable that the detachable fastener be in communication with the bottom portion of the tray along its entire length-wise direction (when the tray is configured in a trough-shape).

Various means may be used to attach the detachable fastener to the other components of the mounting tray, although conventional means used in sheet metal constructions are preferred. Particularly preferred are those attachment means that provide good electrical communication between the tray and transverse positioning member and the detachable fastener. Non-limiting examples of useful attachments include screws, bolts and nuts, locking tabs, hooks, pins, rivets, adhesives and latches.

The detachable fastener comprises one or more fastening means configured to be attachable to complementary features on the mounting rail to mount the mounting tray on the mounting rail. The mounting rail can have openings, recesses and/or protuberances along its surface that can serve as the complementary features for attachment of the mounting tray via the fastening means of the detachable fastener. Some fastening means may be latchable means in that they form a latchable attachment to the mounting rail. For example, one or more protuberances on the detachable fastener can be mated with one or more complementary openings (e.g., holes) or closed-ended recesses (e.g., indentations or hollows) on the mounting rail to form a latchable attachment. The converse arrangement is, of course, also useful. One may also use additional fastening devices, like nuts, to secure the connection of the detachable fastener to the mounting rail when a latchable attachment is used. For example, a detachable fastener with a hole could be mated to a complementary feature on the mounting rail, like a threaded stud or bolt. In such case, an additional fastening means like a nut could be tightened on the nut to secure the attachment of the mounting tray to the mounting rail.

Also, the detachable fastener and mounting rail may be each be configured with one or more complementary openings. In such cases, additional, separate attachment devices, like screws, nuts and bolts, pegs and pins, can be used to secure connection between the detachable fastener to the mounting rail. For example, a screw could be inserted through an opening in a detachable fastener and screwed into a threaded bore in a mounting rail to form a secure attachment.

Some racks, for example those designed for wire-wrap type connectors, may have small protuberances (such as pegs) projecting in a perpendicular direction from the surface of the projecting leg of the mounting rail. Typically, such protuberances are only a few millimeters in length. The detachable fastener can be configured with one or more open-ended recesses each opening on an edge of the detachable fastener. Such configuration permits one to "slide" the peg (or other complementary protuberance) into the recess. The dimensions of these recesses can further be configured on the detachable fastener such that each recess accommodates only one of the pegs. It can be useful to configure such open-ended recesses in a funnel-like shape. Such a recess can be formed, or cut, in the detachable fastener from an edge of the fastener, with the open end being wider than the closed end and the recess tapering in width from the open end to the closed end. Most preferably, the width of the closed end of the recess is about the same as the width of the protuberance, thereby providing a tight fit between the protuberance and recess, and further stabilizing the orientation of the mounting tray on the mounting rail (particularly in the longitudinal direction). It is particularly preferred to provide two such open-ended

recesses in a spaced-apart arrangement in the detachable fastener such that they form a longitudinal positioning section between themselves. The length of the longitudinal positioning section is preferably approximately the same as the distance between two adjacent pegs on the mounting rail. This configuration of the detachable fastener enhances the stability capability of the longitudinal positioning of the mounting tray on the mounting rail.

When latchable means (i.e., those employing a protuberance and a hole or closed-ended recess) are used between the detachable fastener and mounting rail, it is preferable to locate the latchable means on the detachable fastener in a portion of the detachable fastener that is relatively flexible or movable with respect to remaining portion of the detachable fastener, thereby permitting easier deflection or movement of the latchable means away from its complementary feature on the mounting rail. One way of providing a relatively flexible portion for the latchable means is to locate it on a leg or tab cut from the remaining portion of the detachable fastener.

A detachable fastener comprising two, spaced-apart, open-ended recesses and at least two other latchable fastening means each located on a leg or tab is particularly preferred. In such an embodiment, the open-ended recesses open on the edge of the detachable fastener that is opposite the attachment point to the bottom portion of the tray. When mounted on a mounting rail, the two recesses surround two, spaced-apart protuberances (e.g., pegs) on the rail thereby further stabilizing the orientation of the mounting tray along the length of the mounting rail. The latchable fasteners are engaged with their complementary features on

the mounting rail to further fix the mounting tray to the mounting rail and limit movement of the tray toward the "front" direction of the mounting rail.

Combinations of various types of fastening means can be used on a single detachable fastener to configure it to a mounting rail having a combination of complementary features, for example, such as pegs, recesses and holes.

It is particularly preferred to provide the mounting tray with fastening sections that may be stamped from one or more of the sidewalls of the tray, configured for attachment of shielding terminals and cable binders.

In a preferred embodiment of the invention for use on racks with single mounting rail systems, (such as those already noted for mounting wire-wrap type connectors), the mounting tray comprises a tray with a bottom portion and two sidewall portions. Provided at each of the open side portions of the tray, is a transverse positioning member. The tray and the transverse positioning members are formed from a single piece of material, such as sheet metal, and the transverse positioning members are configured (for example by cutting) in the shape of flaps or tabs that are bent downward from the tray bottom in a direction opposite to the sidewalls. Preferably, the tabs or flaps are bent straight down so they form approximately 90-degree angles with the tray bottom, but other angles are also useful. Each of the transverse positioning members is provided with a slot that is configured to accommodate the projecting leg of a mounting rail.

The invention for the first time permits IDC modules to be mounted on racks designed for wire-wrap type connections thereby remarkably increasing the flexibility of such telecommunication distribution means (e.g., main distribution frame). Wire-wrap-type telecommunications distribution means typically have racks comprising "L" shaped rails. The main projecting leg of the "L" shaped rail typically projects in a direction toward the front of the rack, and it extends along the longitudinal length of the rail. Mounting trays comprising at least one transverse positioning member with a slot can conveniently accommodate the front, projecting leg of the "L" shaped rail. Accordingly, there is now no need to change the mounting rack, when changing from wire-wrap connectors to IDC connectors in a distribution means. Instead, the invention can be used to mount IDC junction modules in racks provided originally for wire-wrap connectors.

Brief Description of the Drawings

The invention is further illustrated by way of a preferred embodiment as shown in the drawings in which:

Fig. 1 is an exploded view in perspective of a mounting tray of the invention; and

Fig. 2 is a view in perspective of a mounting tray of the invention including IDC junction blocks mounted on a wire-wrap rack-mounting rail.

Detailed Description of the Invention

Referring now to Fig. 1, there is illustrated a preferred embodiment of the mounting tray 10 of the invention. The mounting tray 10 is configured in a two parts, comprising a tray 14 and a detachable fastener 12. The two components are connected to each other by a rivet 16 that passes through an opening in the bottom portion of the tray 18 and an opening in an angled flange 20 in the detachable fastener. For the connection between the detachable fastener 12 and tray 14, the detachable fastener further comprises two tabs 22 extending in the direction of the tray 14, each of which is provided with an opening 24. The bottom portion of the tray 18 has, at corresponding locations, two "U"-shaped recesses 26 each with a tab 28. When the tray is mounted on the detachable fastener, the tabs 28 engage the openings 24 in the tabs 22 on the detachable fastener thereby mounting the tray on the detachable fastener.

As further evident from Fig. 1, the detachable fastener 12, comprises a longitudinal positioning section 30 integrally formed from the sheet metal of the detachable fastener. The longitudinal positioning section 30 comprises two recesses 32, each configured as open-ended slots. The recesses 32 are "funnel-shaped", each comprising a flared insertion portion that tapers to a narrower end portion. The width of the end portion is adapted to fit the diameter of pegs on a mounting rail for a wire-wrap rack 46 (cf Fig. 2). Fig. 2 illustrates how the mounting tray 10 may be positioned in the longitudinal direction of the mounting rail 46 by using the longitudinal positioning section 30 and the pegs 64 on the mounting rail 46. Each recess 32 is arranged on the mounting

rail 46 such that it receives a peg 64, and then the mounting tray 10 is pushed in a toward the rear or back of the mounting rail 46, thereby seating each peg in the narrower, end portion of the recesses 32. Such placement sets the level of the mounting tray 10 at its desired, final mounting location (when the mounting rail 46 is vertically aligned).

Preventing unwanted movement of the mounting tray 10 toward the front side of the mounting rail (or mounting rack) is achieved by two latching tabs 34, one configured on each of the two, side edges of the detachable fastener 12. By providing a slot 36 between each latching tab 34 and the remaining portion of the detachable fastener, the latching tabs 34 will be sufficiently flexible relative to the rest of the detachable fastener to permit the protuberances 38 (configured as shown in Fig. 1 in the rear section of the detachable fastener) to engage and disengage with a corresponding opening or recess in the mounting rail 46 (cf. also Fig. 2).

The features described above enable the mounting tray 10 to be positioned along the longitudinal direction of a mounting rail whilst reliably preventing unwanted movement to the front side of the mounting rail and permitting removal of the mounting tray from the mounting rail.

In the embodiment shown, transverse positioning members 40 are provided to maintain transverse orientation of the mounting tray 10 on the mounting rail 46 and limit or restrict tilting of the tray when it is mounted on the mounting rail 46. In the embodiment shown, transverse positioning members 40 are provided on opposite sides of the bottom portion of the tray 18. They are down swept (for

example by bending) from the bottom portion of the tray 18 in a direction opposite the sidewalls 48 of the mounting tray. Each transverse positioning member comprises a slot 42. A forward projecting leg 44 of the mounting rail is received by the slot 42 such that the mounting tray 10 can be located in a transverse orientation to the mounting rail 46. This orientation defines the lateral location of the mounting tray 10.

In addition to the bottom portion of the tray 18, the mounting tray 14 further comprises two sidewalls 48, which are configured as frames. The upper edge of each frame comprises openings 50 suitable for latching or attaching the latching means on conventional IDC junction blocks, thereby making the sides walls 48 adapted to mount IDC junction modules.

The embodiment of Fig. 1 advantageously provides material savings and a fully fitted mounting tray by having two fastening sections 52 stamped from each sidewall 48 (only one such fastening section 52 is shown in Fig. 1). The fastening sections 52 are swept downward (for example by bending) from the plane of the sidewall 48 toward the bottom of the mounting tray. Each fastening section 52 comprises, openings 54 for latching shielding terminals that shield the exposed braiding of a shielded cable. The cables leading to the IDC junction modules mounted on the mounting tray 10 are, in addition, terminated by means of cable binders at a "T"-shaped web 56 provided in a correspondingly configured recess 58. It is a good practice to limit the "down-sweep" (or bend) of a fastening section 52 to less than 90 degrees relative to the plane of the bottom portion of the tray 18.

Fig. 2 illustrates how the mounting tray 10 can be used to mount IDC junction modules, provided as junction blocks 60, on the mounting rail 46. As described above, the sidewalls 48 of the mounting tray 10 are adapted to mount several junction blocks 60 (at the front side of the mounting tray 10 when installed on the mounting rail 46). The mounting tray 10 is mounted on the mounting rail 46, which comprises a forward extending leg 44 (extending to the front side of the mounting rail when the rail is installed in a wire-wrap rack), and another leg 62 (extending from the forward extending leg 44 at a perpendicular angle). The leg 62 is used to mount the mounting rail 46 in a wire-wrap rack. The mounting tray 10 can be combined with certain features of the mounting rail 46 such that it is now possible to mount IDC junction blocks 60 on wire-wrap racks. Several pegs 64 are provided at a regular spacing along the longitudinal direction of the mounting rail 46. The recesses 32 located at each side of the longitudinal positioning section 30 are spaced apart from each other at a sufficient distance to accommodate two of the regularly spaced pegs 64. One peg 64 is received by each recess 32, thereby eliminating the possibility that the mounting tray 10 can be displaced along the longitudinal direction of the mounting rail 46 (i.e., the up and down direction shown in Fig. 2). Furthermore, latching tabs 34 are provided in a shape and with a spacing (apart from each other) such that their protuberances 38 are latchable in the openings or recesses 66 located in the rear portion of leg 44 of the mounting rail 46. Additionally, a flange 68 with an opening 70 is provided on each latching tab 34, to provide an easily accessible point for engaging the latching tab 34 so it can deflected somewhat toward the right to permit disengagement of the protuberance 38 from the recess 66, thereby enabling the mounting tray 10 to be

removed conveniently from the front side of the mounting rack.

In conclusion, the mounting tray 10 achieves a defined lateral arrangement with respect to a mounting rail in a mounting rack by the transverse positioning section 40 which could also be termed a "guide check". This is achieved by locating the front extending leg 44 in the slot 42 of the transverse positioning section 40.

Thus, the invention describes a mounting tray 10 adapted to mount IDC junction modules 60, comprising at least one rear positioning section 40 for positioning the mounting tray 10 in a transverse direction with regard to a mounting rail 46, and at least one detachable fastening means 34 provided at a rear part of the mounting tray 10 and configured for providing a detachable connection with a complementary fastening means 66 on said mounting rail 46, so that said mounting tray 10 is mountable on a mounting rail 46 including recesses 66 and/or bores and/or holes and/or pegs 64.

Preferably, the rear positioning section for positioning the mounting tray 10 in a transverse direction is oriented substantially perpendicular to the bottom 18 of the mounting tray 10.

According to an embodiment of the invention, the rear positioning section 40 for positioning the mounting tray 10 in a transverse direction with regard to the mounting rail comprises a slot 42 for accommodating the mounting rail 46.

The invention further describes a mounting tray, wherein a rear longitudinal positioning section 30 extending

practically perpendicular to said transverse positioning section 40 is provided, said longitudinal positioning section 30 including preferably at least one recess 32 for locating a peg 64 configured on said mounting rail 46.

Preferably, said recess 32 for locating said peg 64 is configured as a kind of slot, preferably with a flared insertion portion.

According to a further embodiment of the invention, the fastening means of the mounting tray 10 is a bore or a hole which is adapted to receive a screw or a bolt.

The invention further describes a mounting tray, wherein the detachable fastening means is at least one latching means 34 configured for latching with a complementary latching means 66 on the mounting rail 46.

Preferably, said latching means 34 on said mounting tray 10 is configured as a latching tab including a protuberance 38.

According to a further embodiment of the invention, said latching means 34 comprises a downsweep 68 including an engaging section, preferably an opening 70.

The invention further describes a mounting tray, wherein said mounting tray 10 comprises a fastening section 52 for cable ties and/or shielding terminals.

Preferably, said mounting tray 10 comprises practically open side walls 48.

According to a further embodiment of the invention, said mounting tray 10 is configured two-part, an anchor plate 12 preferably comprising said longitudinal positioning section 30 and said latching means 34.

The invention further describes a mounting tray totally made of metal.

According to a further embodiment of the invention, the mounting tray is made from sheet metal.

The invention further describes a mounting tray comprising two parallel profiles or rails, which are connected by a bottom portion.

2002254952 15 Feb 2006

The claims defining the invention are as follows:

1. A mounting tray for mounting IDC junction modules to a mounting rail in a telecommunications rack, the mounting tray comprising:

(a) a tray adapted to hold one or more IDC junction modules,

(b) at least one transverse positioning member for positioning the tray in a transverse orientation with respect to the mounting rail, and

(c) at least one detachable fastener, providing detachable attachment of the mounting tray to the mounting rail through one or more fastening means configured to permit attachment to one or more complementary features on the mounting rail.

2. The mounting tray according to claim 1, wherein the tray and the at least one transverse positioning member are portions of an integral structure.

3. The mounting tray according to claims 1 or 2, wherein the at least one transverse positioning member comprises a slot configured to receive a front projecting leg of the mounting rail.

4. The mounting tray according to any preceding claim, wherein the mounting tray comprises two transverse positioning members, each comprising a slot configured to receive a front projecting leg of the mounting rail.

5. The mounting tray according to any of the preceding claims, wherein each detachable fastener is in a perpendicular orientation with respect to a bottom portion of the tray.

6. The mounting tray according to any of the preceding claims, wherein the detachable fastener is provided with at least one open-ended recess opening to the edge of the detachable fastener that is opposite the tray.

7. The mounting tray according to any of the preceding claims, wherein each detachable fastener comprises a longitudinal positioning section.

2002254952 15 Feb 2006

8. The mounting tray according to claim 7, wherein an open-ended recess is configured on either side of the longitudinal positioning section.

9. The mounting tray according to any of the preceding claims, wherein the fastening means comprises a hole or bore adapted to receive a screw or bolt.

10. The mounting tray according to any of the preceding claims, wherein the fastening means comprises a latchable means.

11. The mounting tray according to claim 10, wherein the latchable means is selected from the group consisting of holes, indentations, hollows, and protuberances.

12. The mounting tray according to any preceding claim, wherein the detachable attachment member comprises at least one latching tab.

13. The mounting tray according to claim 12, wherein the detachable attachment member comprises two latching tabs, each comprising a protuberance.

14. The mounting tray according to any preceding claim, wherein the mounting tray further comprises a fastening section adapted for mounting cable ties and/or shielding terminals.

15. The mounting tray according to any preceding claim, wherein the tray has a trough-like shape with two sidewalls and a bottom portion of the tray.

16. The mounting tray according to claim 15, wherein each sidewall has a frame-like shape with a horizontal, top rail and two, vertical side rails attached to a bottom portion of the tray.

17. The mounting tray according to claim 16, further comprising a fastening section, wherein the sidewalls and the fastening sections were formed from the same piece of sheet metal by stamping and bending.

18. The mounting tray according to any preceding claim, wherein the mounting tray is made of metal.

2002254952 15 Feb 2006

19. The mounting tray according to claim 3, wherein the tray and transverse positioning members are portions of an integral structure, and mounted to such integral structure is a single detachable fastener, in a perpendicular orientation with respect to a bottom portion of the tray, the detachable fastener further comprising a longitudinal positioning section, and on either side of the longitudinal positioning section are provided two, open-ended recesses, each of which opens to the edge of the detachable fastener that is opposite the tray.

20. The mounting tray according to claim 19, wherein the open-ended recesses are funnel-shaped.

21. A telecommunications rack comprising at least one mounting tray according to any of the preceding claims.

Dated 14 February, 2006
3M Innovative Properties Company
Patent Attorneys for the Applicant/Nominated Person
SPRUSON & FERGUSON

[R:\LIBLL]18194.doc:TCW

Fig. 1

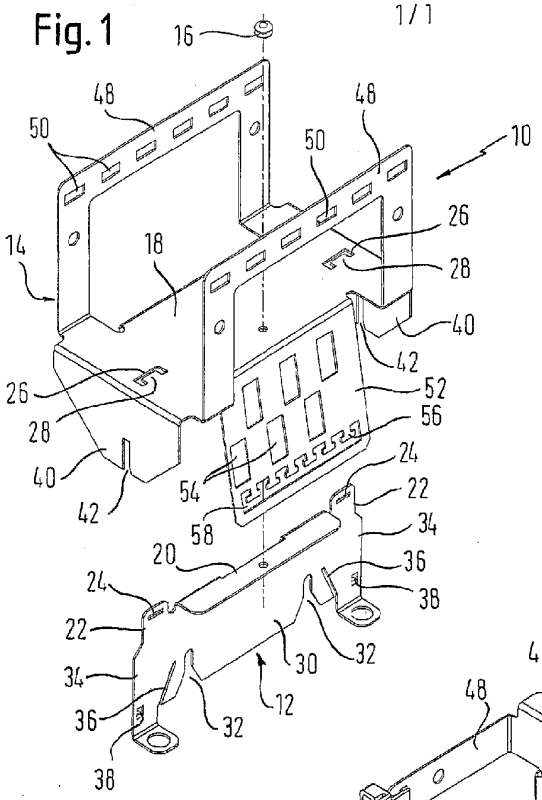
16
48
48
50
50
10
26
28
14
18
40
42
52
56
26
28
40
42
54
24
22
58
34
20
36
24
38
22
34
30
32
36
12
32
38

Fig. 2

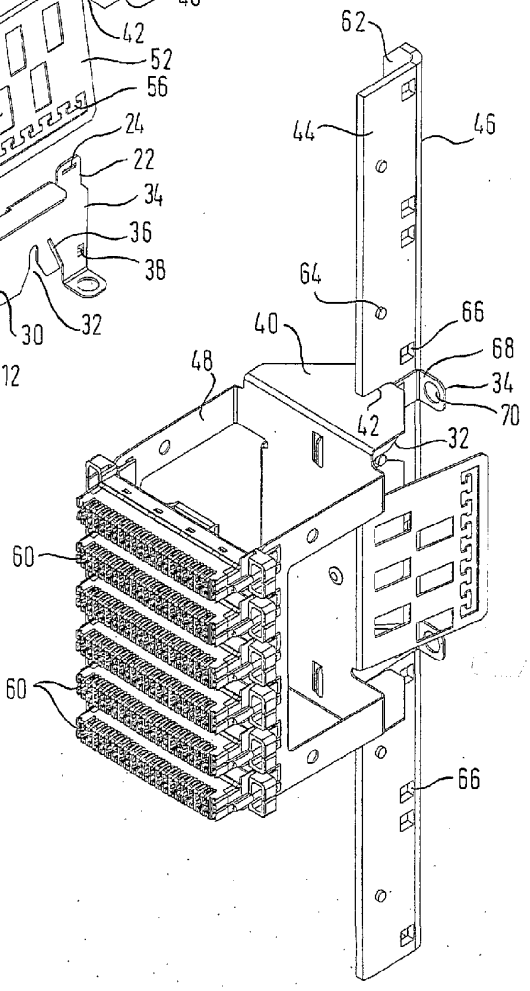
62
44
46
64
66
40
68
48
34
70
42
32
60
60
66