(19) Europäisches Patentamt
European Patent Office
Office européen des brevets

(11) EP 1 775 536 A3

(12) **EUROPEAN PATENT APPLICATION**

(88) Date of publication A3:
23.01.2013 Bulletin 2013/04

(43) Date of publication A2:
18.04.2007 Bulletin 2007/16

(21) Application number: **06021721.3**

(22) Date of filing: **17.10.2006**

(51) Int Cl.:
F25D 23/02 *(2006.01)* ***F25D 25/02*** *(2006.01)*
F25D 23/06 *(2006.01)*

(84) Designated Contracting States:
AT BE BG CH CY CZ DE DK EE ES FI FR GB GR HU IE IS IT LI LT LU LV MC NL PL PT RO SE SI SK TR
Designated Extension States:
AL BA HR MK RS

(30) Priority: **17.10.2005 KR 20050097639**
29.12.2005 KR 20050133858

(71) Applicant: **Samsung Electronics Co., Ltd.**
Suwon-si, Gyeonggi-do, 443-742 (KR)

(72) Inventors:
- **Park, Sung-cheul**
  Gwangju-city (KR)
- **Lee, Byung-moo**
  Gwangju-city (KR)
- **Oh, Jae-sek**
  Gwangju-city (KR)
- **Jeong, Bu-kil**
  Gwangju-city (KR)

(74) Representative: **Grünecker, Kinkeldey, Stockmair & Schwanhäusser**
Leopoldstrasse 4
80802 München (DE)

(54) **Refrigerator**

(57) A refrigerator, with an inner casing (2) forming a drawer type storage compartment (23) and a drawer unit (30) being received in and combined with the drawer type storage compartment (23), the refrigerator having: at least a pair of rail units (40) provided between the inner casing (2) and the drawer unit (70) enabling the drawer unit (30) to slide against the inner casing (2); a support part (7) positioned at the inner casing (2), supporting the rail unit (40), and preventing the rail unit (40) from moving upward and downward; and a combining part combining the rail unit (40) with the support part (7), the combining part enabling the support part (7) to move relative to the rail unit (40) in a direction approximately perpendicular to a surface of the inner casing (2).

FIG. 1

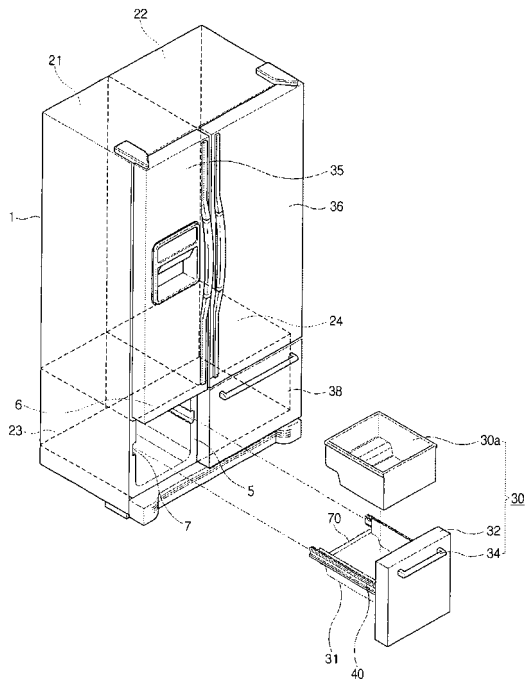

EP 1 775 536 A3

Europäisches Patentamt
European Patent Office
Office européen des brevets

PARTIAL EUROPEAN SEARCH REPORT

under Rule 62a and/or 63 of the European Patent Convention. This report shall be considered, for the purposes of subsequent proceedings, as the European search report

Application Number
EP 06 02 1721

DOCUMENTS CONSIDERED TO BE RELEVANT

Category	Citation of document with indication, where appropriate, of relevant passages	Relevant to claim	CLASSIFICATION OF THE APPLICATION (IPC)
X	US 2003/173882 A1 (KOONS BILL J [US]) 18 September 2003 (2003-09-18) * paragraph [0016] - paragraph [0027]; figures 1-5 *	1-8	INV. F25D23/02 F25D25/02 F25D23/06
A	US 2005/160854 A1 (ROTTER CHAD [US] ROTTER CHAD [US] ET AL) 28 July 2005 (2005-07-28) * paragraph [0043] - paragraph [0065]; figures 1-8 *	1-8	
A	DE 10 2004 014464 A1 (LIEBHERR HAUSGERAETE [DE]) 13 October 2005 (2005-10-13) * paragraph [0023] - paragraph [0029]; figures 1,2 *	1-8	

TECHNICAL FIELDS SEARCHED (IPC)

F25D

INCOMPLETE SEARCH

The Search Division considers that the present application, or one or more of its claims, does/do not comply with the EPC so that only a partial search (R.62a, 63) has been carried out.

Claims searched completely :

Claims searched incompletely :

Claims not searched :

Reason for the limitation of the search:

see sheet C

1

Place of search	Date of completion of the search	Examiner
Munich	20 December 2012	Amous, Moez

CATEGORY OF CITED DOCUMENTS

X : particularly relevant if taken alone
Y : particularly relevant if combined with another document of the same category
A : technological background
O : non-written disclosure
P : intermediate document

T : theory or principle underlying the invention
E : earlier patent document, but published on, or after the filing date
D : document cited in the application
L : document cited for other reasons
.....
& : member of the same patent family, corresponding document

EPO FORM 1503 03.82 (P04E07)

Europäisches Patentamt
European Patent Office
Office européen des brevets

INCOMPLETE SEARCH SHEET C

Application Number
EP 06 02 1721

Claim(s) completely searchable:
1-8

Claim(s) not searched:
9-20

Reason for the limitation of the search:

Rule 62a EPC

ANNEX TO THE EUROPEAN SEARCH REPORT ON EUROPEAN PATENT APPLICATION NO. EP 06 02 1721

This annex lists the patent family members relating to the patent documents cited in the above-mentioned European search report.
The members are as contained in the European Patent Office EDP file on
The European Patent Office is in no way liable for these particulars which are merely given for the purpose of information.

20-12-2012

Patent document cited in search report	Publication date	Patent family member(s)	Publication date
US 2003173882 A1	18-09-2003	US 2003173882 A1	18-09-2003
		US 2006033410 A1	16-02-2006
		US 2007227180 A1	04-10-2007
US 2005160854 A1	28-07-2005	CA 2492681 A1	16-07-2005
		US 2005160854 A1	28-07-2005
		US 2007144408 A1	28-06-2007
DE 102004014464 A1	13-10-2005	CA 2561199 A1	06-10-2005
		CN 1954184 A	25-04-2007
		DE 102004014464 A1	13-10-2005
		EP 1728034 A1	06-12-2006
		JP 2007530900 A	01-11-2007
		KR 20070003970 A	05-01-2007
		RU 2362098 C2	20-07-2009
		US 2007210089 A1	13-09-2007
		WO 2005093348 A1	06-10-2005

EPO FORM P0459

For more details about this annex : see Official Journal of the European Patent Office, No. 12/82