Feb. 15, 1944. A. E. KROGH 2,341,727

GAS ANALYSIS APPARATUS

Filed May 11, 1940 2 Sheets-Sheet 1

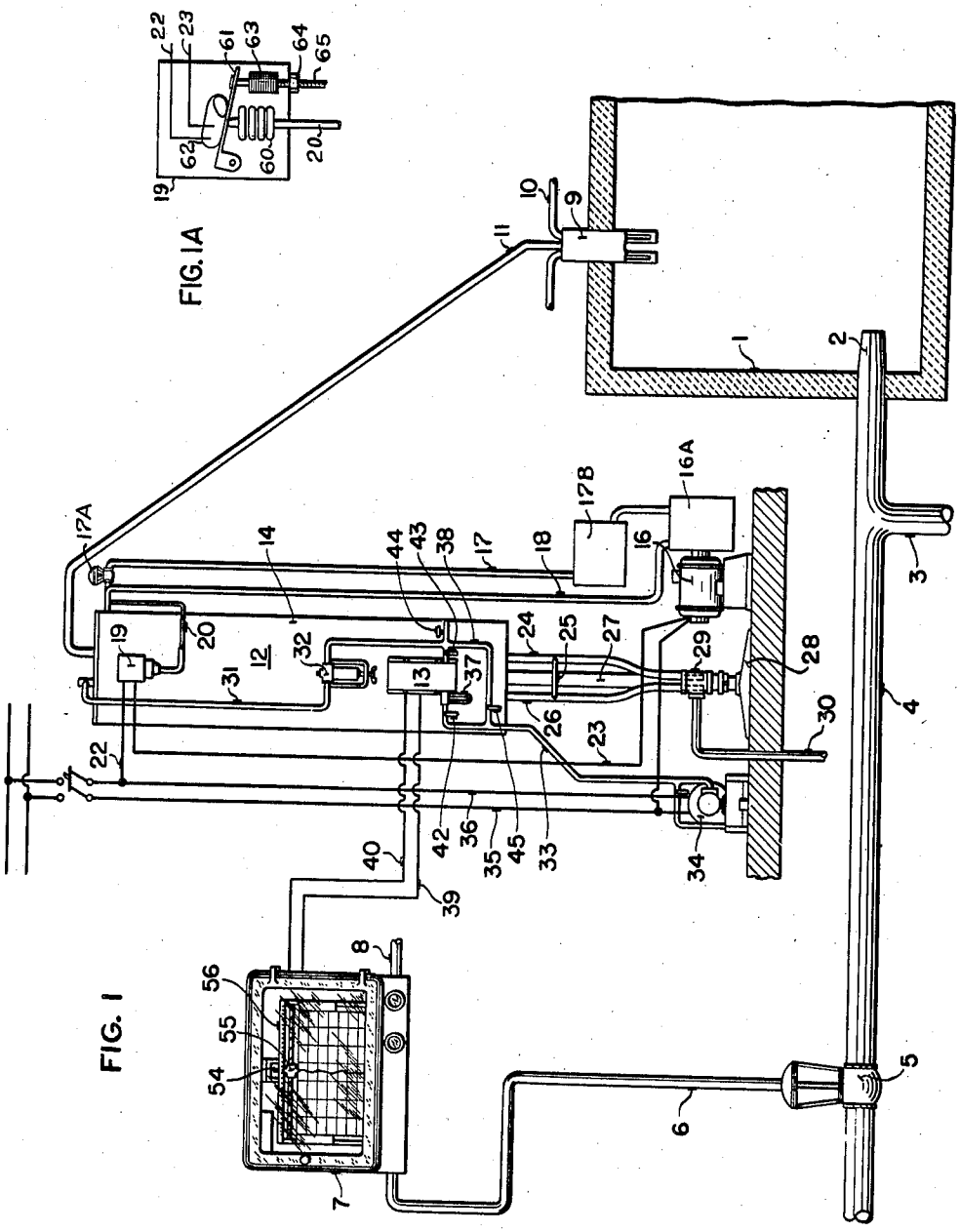

FIG. 1A

FIG. 1

INVENTOR.
ANKER E. KROGH

BY C. B. Spangenberg
ATTORNEY

Feb. 15, 1944. A. E. KROGH 2,341,727

GAS ANALYSIS APPARATUS

Filed May 11, 1940 2 Sheets-Sheet 2

FIG. 2.

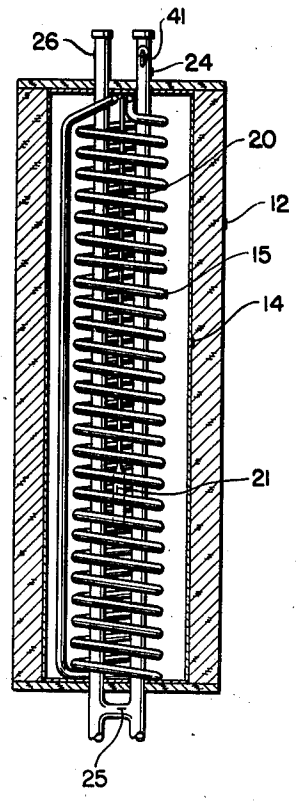

FIG. 3.

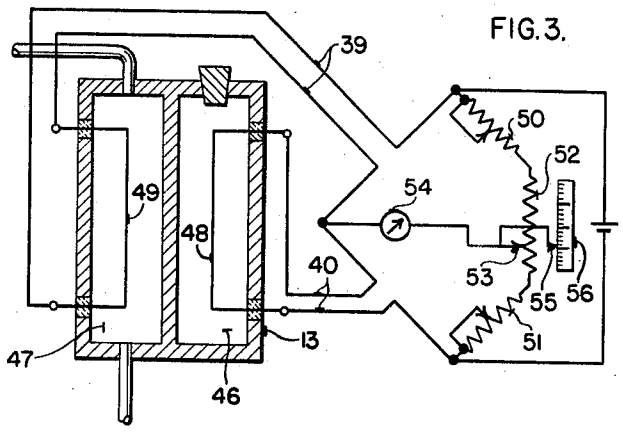

INVENTOR.
ANKER E. KROGH

BY C. B. Shangenberg
ATTORNEY

Patented Feb. 15, 1944 2,341,727

UNITED STATES PATENT OFFICE

2,341,727

GAS ANALYSIS APPARATUS

Anker E. Krogh, Philadelphia, Pa., assignor to The Brown Instrument Company, Philadelphia, Pa., a corporation of Pennsylvania

Application May 11, 1940, Serial No. 334,677

2 Claims. (Cl. 73—51)

The present invention relates to control instruments and more particularly to a system for analyzing the gases in a furnace and controlling the fuel to the furnace in response to the analysis of the gas.

In various types of furnaces it is desirable to keep either an oxidizing or a reducing atmosphere depending upon the use to which the furnace is put. In ordinary boiler furnaces it has been found that for maximum efficiency it is necessary to keep the CO_2 content of the exhaust gases at some predetermined percentage. In either case various instruments that have been developed for analyzing gases are used to analyze the furnace or exhaust gases and to control the ingredient which affects the analysis. Systems of this type often have an objectionable lag between the time a sample of the gas in question is taken and the time that the result of the analysis is reflected in an operation of the control device. This lag is often due to the slowing down of the sample of gas as it flows through a series of filters between the point at which the sample was taken and the point at which an analysis is made of the gas.

It is an object of the present invention to provide a means for rapidly and efficiently cleaning a sample of gas to be analyzed without affecting the flow of the gas. It is a further object of the invention to remove dirt and moisture from a continuously flowing sample of gas without subjecting the gas to any retarding influence.

It is a further object of the invention to pass a sample of gas going from a point of origin to a point of analysis through a cooling or refrigerating unit so that the gas will have its temperature lowered. In so lowering the gas temperature the humidity of the gas is increased and the excess moisture will be precipitated out. At the same time this moisture will carry the particles of dirt entrained in the gas along with it. By controlling the temperature to which the gas sample is reduced, the gas, before it enters the analyzing space, may be made to have any desired relative humidity. This feature is of importance since each of various types of analyzing apparatus function best when the gas to be analyzed is at some particular relative humidity. Thus a clean gas of the proper humidity is introduced to the analyzing space.

While the apparatus is described herein as being used to analyze and control a furnace atmosphere, the invention is applicable for any use to which an analyzing apparatus may be placed, or for any use in which it is desired to clean a gas.

The various features of novelty which characterize my invention are pointed out with particularity in the claims annexed to and forming a part of this specification. For a better understanding of the invention, however, its advantages and specific objects obtained with its use, reference should be had to the accompanying drawings and descriptive matter in which I have illustrated and described a preferred embodiment of the invention.

In the drawings:

Fig. 1 shows a system for analyzing a gas and controlling the analysis thereof;

Fig. 1A is a view of the temperature controller;

Fig. 2 is a sectional view showing the inside of the refrigerator tank used in this system; and

Fig. 3 is a diagrammatic wiring diagram of a thermal conductivity measuring system.

Referring to Figure 1, there is shown a furnace 1 whose atmosphere is to be measured, the furnace being supplied with fuel through a burner 2 that is in turn supplied with air through pipe 3 and fuel through pipe 4. When the atmosphere of the furnace varies from the predetermined atmosphere that is desired the fuel-air ratio is changed by opening or closing a valve 5 in the fuel supply line 4. This valve is of the air operated type that has an air pressure applied to its diaphragm through a pipe 6. The air pressure applied to the valve diaphragm is varied in response to the analysis of the furnace atmosphere made by means of an instrument 7 which may be of the air-controlled potentiometer type shown in Harrison Patent 2,112,091. This instrument is supplied with air under pressure through a line 8 and in response to measurements made of the furnace atmosphere varies the pressure applied through line 6 to the valve 5.

A sample of the furnace atmosphere is taken through a water cooled outlet 9 that is supplied with cooling liquid through the pipe 10. The sample of gas is drawn from outlet 9 through a pipe 11 to a refrigerator tank 12 which serves to cool the gas and precipitate out moisture and dirt and the gas is then passed through a thermal-conductivity analyzing cell 13.

The refrigerating unit indicated generally at 12 consists of a heavily insulated tank 13 which is filled with a suitable liquid such as calcium-chloride brine. Within the tank is a refrigerating coil 15 that is supplied with refrigerant through an expansion valve 17A that is located in the inlet pipe 17 to the coil 15. This pipe is

supplied from a suitable condenser 17B. The fluid in the refrigerating system is compressed by a compressor 16A driven through a motor 16. The refrigerant is returned from coil 15 to the system by a pipe 18. The temperature that is maintained within the tank 14 is controlled by means of the temperature controller 19 connected by capillary 20 to a temperature responsive bulb 21 that is located in the brine. The controller 19 may be of the type shown and described in Cunningham Patent 2,014,050, or in Shipley Patent 2,080,836 but is shown diagrammatically herein in Figure 1A as comprising a bellows 60 connected to the end of capillary which bellows expands and contracts as the temperature of the bulb 21 changes. The movement of the bellows 60 serves to tilt a support 61 for a mercury switch 62 around its pivot to open or close the switch. The bellows acts against the force of a spring 63 whose force may be adjusted by means of a nut 64 acting on a screw threaded member 65 attached to the lower end of the spring. Changing the force of the spring serves to change the control point of the instrument or the temperature it will tend to maintain. As the temperature of the brine rises above some predetermined value the temperature controller 19 serves to close the switch 62 to complete a circuit between lines 22 and 23 to energize compressor unit 16 to lower the temperature of the tank.

A sample of air from the line 11 passes into the tank 14 through a pipe 24 that is connected by a short pipe 25 with an exit pipe 26. The pipes 24 and 26 along with a third pipe 27 serve as legs to support the tank 14 by means of a base 28. The legs comprising pipes 24, 26 and 27 are held together by means of a hollow sealing member 29 which has a drain pipe 30 extending from it. After leaving the tank 14 through the pipe 26, the sample of gas passes through pipe 31 and a secondary filter 32, which may or may not be necessary, to the cell 13 and from there is exhausted through pipe 33. A constantly running motor driven pump 34 is used to continuously draw a sample of the air from the furnace through the refrigerating unit and the analyzing cell to exhaust it either to the atmosphere or back into the furnace as the case may be. The pump drive motor is preferably of the variable speed type so that its speed may be varied in to keep a constant but easily adjusted flow of gas through the sampling line. The amount of this flow is visually shown by means of a draft gauge 37 that is located in pipe 33 on the exhaust side of the cell 13. A by-pass line 38 is provided around the cell 13 so that the cell may be disconnected if necessary. The cell is connected to the instrument 7 through suitable wiring 39 and 40. Suitable valves are provided along the sampling line so that various of the units may be disconnected if desired. For example, a valve 41 is provided in the pipe 24 to shut off the supply of gas from pipe 11. Valves 42 and 43 are provided in lines 31 and 33 so that the flow of gas may be shut off through the cell 13 and the cell removed from the system. A drain valve 44 is provided in the line just in front of the cell 13 so that the system can be drained or blown out if necessary, and a valve 45, in the by-pass 38, is normally closed during the operation of the system.

The cell 13 and the instrument 7 form a gas concentration measuring system that may be of any desired type depending upon the gas that is to be kept at some predetermined value within the furnace. The system can be used to either maintain an oxidizing or a reducing atmosphere in the furnace 1 but it may also be used to maintain a predetermined carbon dioxide content of the exhaust gases of a furnace.

The gas concentration measuring device 13 consists of a pair of compartments 46 and 47, the former of which is sealed as shown and contains a sample of the gas the concentration of which it is desired to measure, or a sample of any suitable comparison gas in accordance with the well-known conductivity principle of gas analysis. This compartment 46 also contains a resistance wire 48 which has a substantial temperature coefficient and forms one arm of a Wheatstone bridge. The other compartment 47 of the measuring device is fed by the tube 31 with the sample of gas to be tested and is connected with the exhaust tube 33. Because of its connections with the furnace 1, a continuous sample of gas therefrom may pass through the chamber 47 and over a resistance wire 49 therein which also has a substantial temperature coefficient and forms another arm of the Wheatstone bridge. The resistances 50 and 51 form the other arms of the Wheatstone bridge and are connected at their respective ends by a resistance 52 with which is associated a contact 53.

A galvanometer 54 is inserted in the bridge circuit to detect any unbalance thereof as the quality of the gas flow through chamber 47 varies. The measuring device could, of course, be of the deflectional type in which the deflections of the pointer constitute a measure of the gas composition but, preferably this instrument is of the automatic self-balancing, or null type, in which the contact 53 is continuously moved to a position in which the bridge circuit is balanced and a pointer 55, associated therewith, may indicate on a scale 56 the value of the gas concentration. While the adjustment of valve 5 could be manually changed in accordance with the deflections of the galvanometer in the deflectional type, and of the pointer 5 in the null type, it is preferred to adjust the valve automatically. Accordingly, the galvanometer 54 is herein shown designed to form part of a suitable relay or control mechanism designated generally by the reference numeral 7 and is shown as being of the type described in Harrison Patent 2,112,091, above mentioned. In said mechanism, deviation of the galvanometer pointer, due to unbalance of the Wheatstone bridge, will be detected and the contact 53 moved in the proper direction until the bridge is rebalanced. Air pressure varied in accordance with the position of contact 53 is applied to the diaphragm of valve 5 to vary the opening thereof.

In the operation of the system a continuous sample of gas is drawn from the furnace to the cell 13 passing, on its way, through the refrigerating unit 12. This unit serves to cool down the gas and in so doing increases its relative humidity to a point where excess moisture will precipitate from the gas and drop down through pipes 24 and 26 to the sealing unit 29 where it will be discharged through the exhaust pipe 30. As the moisture precipitates out of the gas sample it will carry along with it any dirt or dust that may be in the sample, thus permitting only clean gas to go to the cell 13. As the gas passes from the pipe 26 through pipe 31 to the cell 13 it is outside of the refrigerated zone and will be warmed sufficiently so that its relative humidity is decreased to a point where the conduc-

tivity cell 13 can most efficiently analyze the gas. By varying the temperature which is maintained within the tank 13, more or less of the entrained moisture in the gas sample can be removed and the amount of heating of the gas that is accomplished as it passes through the pipe 31 can be varied. Therefore, gas of any desired relative humidity may be had in the cell 13 so that this cell will work with the maximum efficiency. The filter 32 may or may not be necessary depending upon the type of gas that is being measured, but in any event, the large amount of dirt and moisture that is removed from the gas sample by means of the refrigerating process will leave the gas so clean that the effect of the filter 32 on the flow of the sample is negligible and it will last indefinitely without having the filter material changed. Thus it is seen that a continuous sample of gas is drawn upwardly from the furnace to the measuring instrument and that the analysis of this sample is quickly made so that the control valve 5 will be operated practically as soon as the gas sample has been drawn from the furnace. This short period between the time a sample is taken and the time a control impulse is given to the valve 5 means that a more accurate control is obtained than has heretofore been obtained by a system in which there was a lag between the time that the sample was withdrawn from the furnace and the time that a control impulse was given to the valve as a result of the measurement of that sample.

While in accordance with the provisions of the statutes, I have illustrated and described the best form of my invention now known to me, it will be apparent to those skilled in the art that changes may be made in the form of the apparatus disclosed without departing from the spirit of my invention as set forth in the appended claims, and that in some cases certain features of my invention may sometimes be used to advantage without a corresponding use of other features.

Having now described my invention, what I claim as new and desire to secure by Letters Patent is:

1. In a measuring system, means to create a continuous sample flow of gas to be analyzed and means to clean said gas without resistance to its flow comprising a pair of vertically extending in-flow and out-flow pipes through which said gas flows, a fluid connection between said pipes, the lower end of said pipes being immersed in a sealing liquid and means surrounding said pipes to cool the gas flowing therethrough to a predetermined degree which is below its dew point, said connection being adjacent the lower end of said surrounding means, said surrounding means comprising a tank and a refrigerating coil in said tank, and means to adjust the temperature of said refrigerating coil to vary the moisture precipitated and therefore the relative humidity of the gas.

2. In a gas analyzing system, means to create a continuous sample flow of gas to be analyzed and means to clean and remove moisture from said gas comprising a pair of vertically extending inflow and outflow pipes through which said gas flows, cooling means surrounding said pipes to cool the gas flowing therethrough to a predetermined degree which is below its dew point, a trap receiving the lower ends of said pipes for removing condensate from the pipes, a fluid connection between the pipes near the lower ends thereof, and means to adjust the temperature of said cooling means to vary the moisture precipitated and therefore the relative humidity of the gas.

ANKER E. KROGH.