Aug. 22, 1939. R. J. BRANDT 2,170,006

BASE CONSTRUCTION

Filed Sept. 27, 1937

Fig. 1

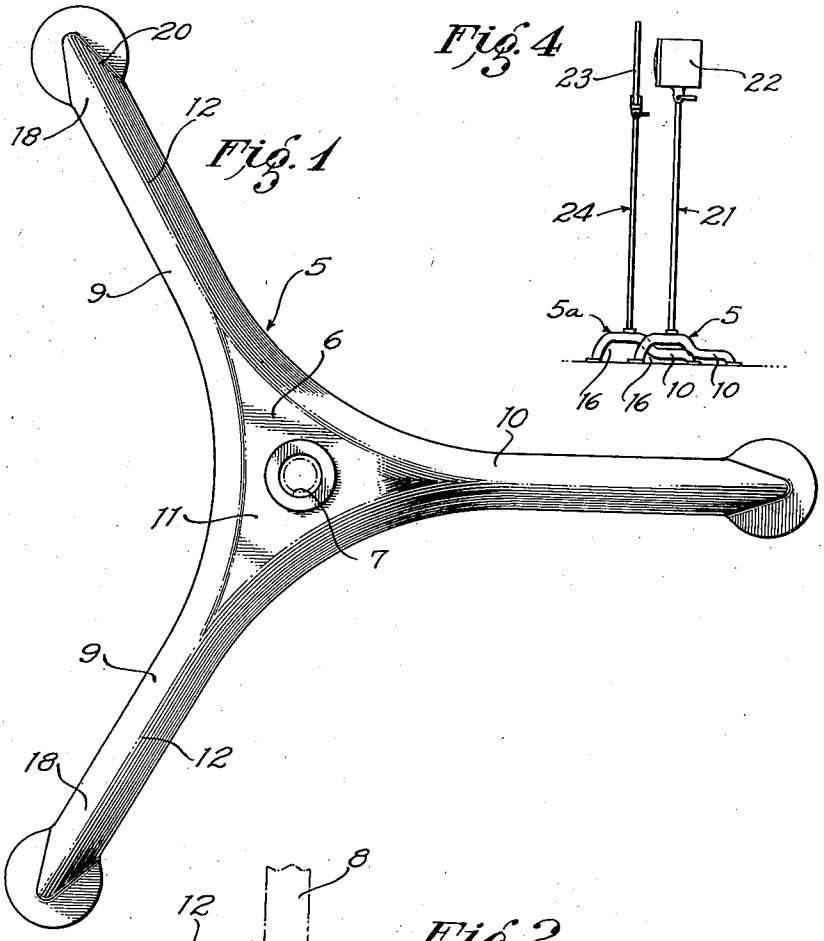

Fig. 4

Fig. 2

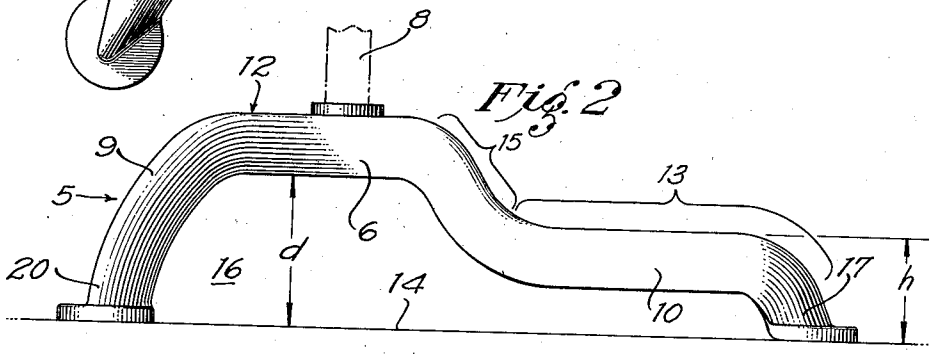

Fig. 3

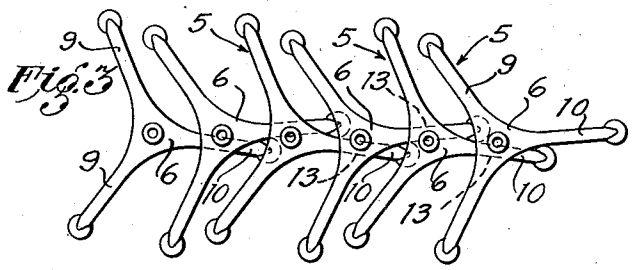

ROBERT J. BRANDT,
INVENTOR.

BY

ATTORNEY

Patented Aug. 22, 1939 2,170,006

UNITED STATES PATENT OFFICE

2,170,006

BASE CONSTRUCTION

Robert J. Brandt, Los Angeles, Calif.

Application September 27, 1937, Serial No. 165,922

1 Claim. (Cl. 248—194)

My invention relates to a base or tripod especially adapted for use as the supporting part of a standard for supporting lamps, masks, or screens extensively employed in the motion picture industry in conjunction with the illumination of sets.

In the lighting of a set during the photographing of a motion picture it is customary practice to place lamps around the set, such lamps being supported by standards. Also, where natural or selected lighting effects are desired it is a practice to support in front of the lamps, screens or mask through which the light from the lamp passes. For example, in front of the lamp a mask comprising a series of bars may be placed so that the light which passes to the set will be in the form of bars representing the light which passes though a Venetian blind into a room. Likewise, if the shadow of prison bars is desired upon a set, a suitable mask is prepared and such mask is supported before the lamp by means of a standard.

It is an object of my invention to provide a base for a standard of the character hereinabove described, such base being so formed that adjacent standards, for example, a light standard and a mask or screen supporting standard, may be placed close together, thereby making it possible to quickly and easily adjust a mask or screen in front of, and suitably close to, a lamp.

It is a further object of the invention to provide a base for a standard so formed that adjacently placed bases of the type herein described may be disposed in a nested or overlapping relation, this making it possible to dispose the bases in such position that the bodies or standard supporting parts thereof will lie close together. As hereinbefore described, a feature of this construction is that a standard supporting a screen or mask may be placed very close to a standard supporting a lamp. Likewise, the construction herein disclosed makes it possible to store lamps and other standards in a smaller space than is ordinarily required, for the reason that the bases of the standards may be placed in the described overlapping or nested relation.

A further object of the invention is to provide a base of the character hereinabove described having an arm which lies very close to the floor, and having other arms which are spaced from the floor at such distance that an opening or space will be left thereunder to receive an arm of a similarly formed base, it being a feature of the invention that the raised arm extends horizontally, or has horizontal portions, so as to provide steps onto which a workman may climb in adjusting the device supported by the standard of which the base forms a part.

Further objects and advantages of the invention will be brought out in the following part of the specification.

Referring to the drawing which is for illustrative purposes only,

Fig. 1 is a plan view of a base embodying my invention.

Fig. 2 is a side view of the base show in Fig. 1.

Fig. 3 is a plan view showing how a number of these bases may be stored in nested relation.

Fig. 4 is a schematic elevational view showing the manner in which standards employing my new form of base may be used.

The base 5 shown in the drawing comprises a substantially central body 6 having a threaded opening 7 in which an upwardly extending pipe or staff 8 may be secured. The body 6 is preferably of triangular form and has extending therefrom a pair of arms 9, referred to as forwardly extending arms for the reason that they project in a direction opposite from a third arm 10 which is referred to as the rearwardly extending arm. The arms 9 project horizontally from the body 6 in the plane of such body so that the upper face 11 of the body 6 will be a continuation of the upper faces 12 of the arms 9. Also, the arms 9 are disposed at angles of divergence of less than 180°, and preferably at an angle of 120° to each other and to the third arm 10.

As shown in Fig. 2, the main portion 13 of the arm 10, referred to as the outer portion of such arm 10 lies relatively close to the floor 14 and is substantially parallel thereto. The inner portion 15 of the arm 10 curves upwardly to meet the body 6 which is disposed at such height from the floor 14 that the dimension d from the lower face of the body 6 to the floor 14 will be slightly greater than the dimension h from the upper face of the outer portion 13 of the arm 10 to the floor 14. The arms 9, being disposed in the plane of the body 6 are likewise at a distance d from the floor, the result being that an opening or space 16 is formed between the body 6, the arms 9 and the floor 14, of sufficient vertical dimension that the outer portion 13 of the arm 10 of one base 5, may pass under the arms 9 or body 6 of an adjacent base 5, as clearly shown in Fig. 3 wherein the bases 5 are placed in consecutive order with the arm 10 of each base extending under the arms 9 or body 6 of the base 5 adjacent thereto.

At the extremity of the rearwardly extending arm 10 a relatively short foot 17 is formed for

engagement with the floor 14, and the outer ends 18 of each of the arms 9 are curved downwardly to form legs 20 for engagement with the floor 14. Fig. 3 discloses the manner in which the bases of a plurality of standards may be placed in nested relation in a storage space, thereby making it possible to store such standards and the equipment supported thereby in a minimum area.

In Fig. 4 I show a standard 21 having a lamp 22 supported at the upper end thereof and having a base 5 forming the lower part of the standard 21. A mask 23 is supported in the position shown in Fig. 4 so that the light which passes forwardly from the lamp 22 will be intercepted by the mask 23. To support such mask 23 as shown a standard 24 is employed which has a base 5*a*. By extending the arm 10 of the base 5*a* through the opening 16 of the base 5 of Fig. 4, it is possible to place the standard 24 relatively close to the standard 21 and accordingly to support the mask 23 as close as may be desired to the front of the lamp 22. Owing to the fact that the upper faces 12 of the forwardly extending legs 9 constitute extension of the upper face 11 of the body 6, either arm 9 and that portion of the body 6 lying adjacent thereto form a step in spaced relation to the floor and on which a workman may stand during the time he is making an adjustment of means supported by a standard, such for example as the lamp 22 or the mask 23.

Although my invention has been disclosed herein in simple and practical form, it is recognized that the principles of the invention may be embodied in equivalent parts having different physical appearance; accordingly, I desire it understood that the invention is not limited to the details disclosed herein but that the same should be accorded the whole scope of the hereto appended claim.

I claim as my invention:

A standard base of the character described, comprising: a substantially central body having a pair of arms extending forwardly therefrom and a third arm extending rearwardly therefrom, the major portion of said third arm being disposed substantially parallel to the floor, the inner end of said third arm bending upwardly to engage said body, the lower face of said body being at a slightly greater height from said floor than the upper face of said outer portion of said third arm, and said pair of arms extending horizontally outwardly from said body in the plane of said body so that said major portion of said third arm will pass under the body and under the pair of arms of a like base resting on the floor adjacent said base, there being leg members formed at the other ends of said pair of arms for engaging said floor.

ROBERT J. BRANDT.