June 2, 1931. C. I. HAYES 1,808,721

METHOD FOR HEAT TREATMENT

Filed May 25, 1929

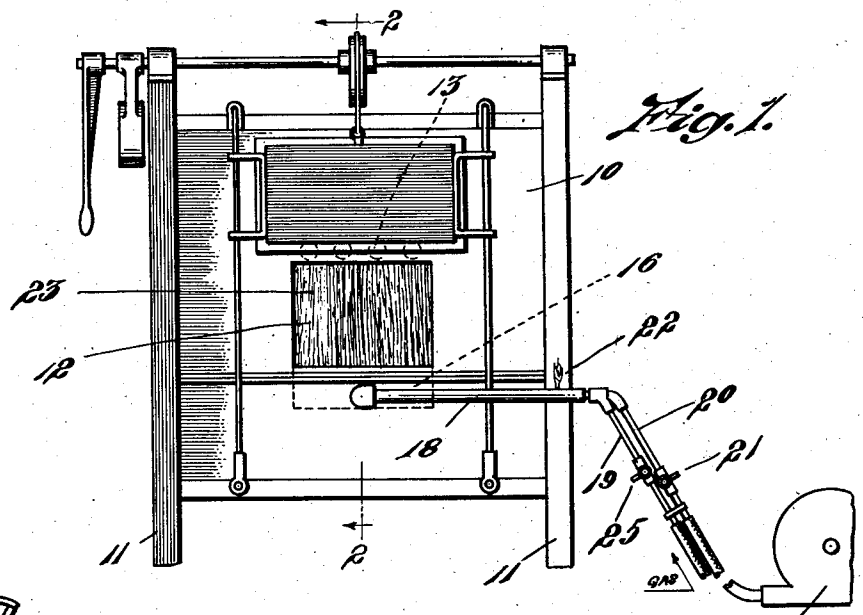


Fig. 1.

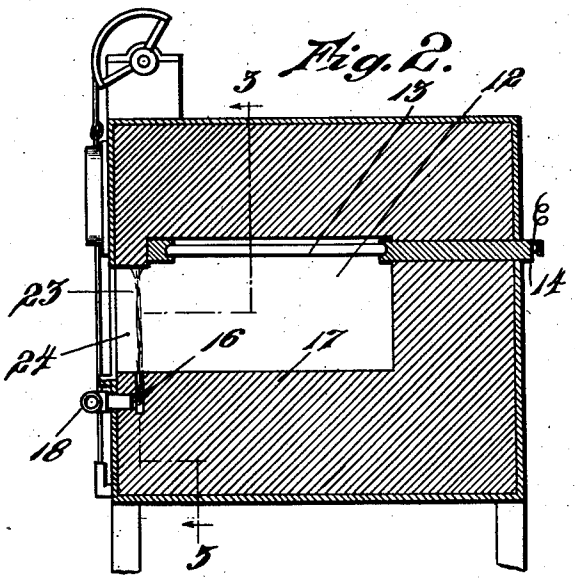


Fig. 2.

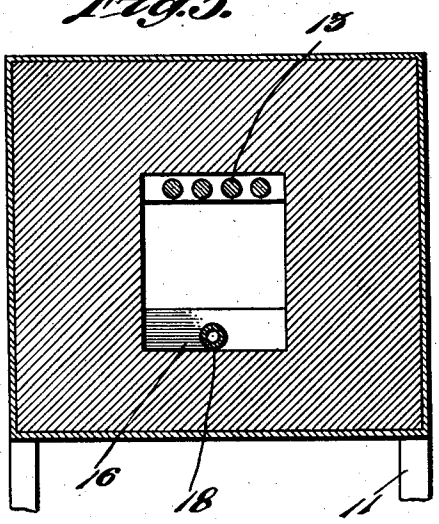


Fig. 3.

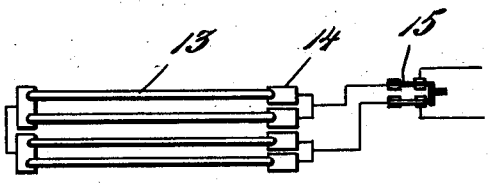


Fig. 4.

INVENTOR.
Carl I. Hayes
BY Barlow & Barlow
ATTORNEYS.

Patented June 2, 1931 1,808,721

# UNITED STATES PATENT OFFICE

CARL I. HAYES, OF PROVIDENCE, RHODE ISLAND

## METHOD FOR HEAT TREATMENT

Application filed May 25, 1929. Serial No. 365,975.

The present invention relates to a novel method for heat treating metals, and is a continuation in part of copending application Serial No. 277,231, filed May 12, 1928, for "electric furnace".

The novel method relates broadly to the heat treatment of metals in an enveloping atmosphere of controlled constituency and to control of the metal during heat treatment by providing a transparent, colorless, gaseous curtain for the heating chamber through which the heat treated metals may be readily inserted and removed, and through which the progress of the heat treatment may be visually observed.

The invention may be carried out in various way, but for the purpose of the present disclosure one example of an apparatus is shown in the accompanying drawings, in which:

Figure 1 is a front view of the electrically heated furnace showing one means by which gases may be introduced to form a thin film or curtain across the entrance to the furnace chamber.

Figure 2 is a central sectional view on line 2—2 of Figure 1, showing one arrangement of electrical heating units and showing a slit or slot in the lower wall of the chamber thru which curtain forming gases may be introduced.

Figure 3 is a section on line 3—3 of Figure 2 showing one arrangement of electrical heating units and a slot in the lower wall of the chamber for introducing a thin film of gases to form a curtain across the mouth of the work-receiving chamber.

Figure 4 is a diagrammatic view illustrating one arrangement of a group of heating units electrically connected together.

Heretofore, in the treatment of metals by heat, particularly when subjecting such metals to high temperatures, it has been difficult to control the metal enveloping atmosphere within the heating chamber so as to correspond to the metal undergoing the heat treatment. Thus, steels normally require an inert or non-reactive atmosphere, in order to eliminate oxidation and the resultant scaling and pitting; high speed steels, however, may be hardened by heat treatment in an atmosphere containing a slight, definite, excess of carbon monoxide.

Applicant therefore provides a furnace for heat treatment which permits an accurate control of the metal enveloping atmosphere, and also facilitates heat treatment control by using a colorless, transparent, gaseous curtain through which the metal may be inserted and removed, and through which the heat treating may be observed.

With reference to the drawings, the invention may be practiced by providing a furnace 10, supported on legs 11, which is built of suitable refractory material and within which is formed a work-receiving chamber 12 which may be heated either by gas or electricity in any suitable way; that herein shown being arranged to be heated by an electric current passing thru a group of resistance bars 13, in which group the circuit wires are connected to the terminal rods 14 and the current is controlled by a switch 15; the chamber 12 may therefore be heated to a high degree for hardening, tempering, annealing or to any desired degree for otherwise treating metals by the application of heat thereto.

It is preferred to use an electric heater for the furnace chamber 12 because the heat can be better regulated and will better maintain constant temperatures.

The essential feature of my present invention is the provision of means for introducing a film of gases to form a transparent, colorless curtain across the mouth or entrance of the furnace chamber which will seal or exclude atmospheric air from the chamber 12 and will fill the chamber so as to produce the desired atmospheric conditions therein; one means of accomplishing this result is to form a narrow nozzle slot or opening 16 in the lower wall 17 of this chamber, the slot extending across the throat of the chamber from side to side thereof, to provide a relatively long discharge jet or nozzle. This nozzle slot is connected to a tube or pipe 18 providing a gas combustion chamber which has attached a gas feeding pipe 19 and an air introducing pipe 20 lead-

ing from the blower 26. The openings in these pipes are controlled and varied to suit the conditions under which the furnace is operating.

When the air and gas is introduced thru these pipes 19 and 20 to mix in the larger combustion tube or chamber 18, the mixture is ignited thru the vent hole 22 in the pipe 18. The products of combustion from the gas thus ignited are thus forced under high pressure into the nozzle 16.

These products spread throughout the length of the nozzle slot and are forced upwardly to form a thin film or sheet 23 across the throat 24 of the chamber 12, the pressure of these gases serving to exclude the outside air from the work receiving chamber; also a portion of these gases when striking the opposite wall of the entrance opening flow into the chamber 12 to fill the same. The continuous projection of additional gases maintains the atmosphere-excluding sheet, and also maintains a continuous, regulated circulation of gases with the heating chamber. The oxygen which is first found in the chamber thus mixes with the curtain gases and is dissipated so that the proper atmospheric condition within the chamber is obtained and continuously maintained, the work subsequently introduced being prevented from oxidizing while being subjected to the heat in the chamber. The heating chamber may be provided with a door, if desired.

It is found in practice that varying the proportions of the air and gas used to form this curtain by the valves 21 and 25, respectively regulates and maintains the proper or desired atmospheric conditions within the furnace so as to produce different desired effects upon the work being treated. Also it is found that these atmospheric conditions within the furnace may be varied without appreciably affecting the temperature of the chamber, and that the provision of a transparent, colorless curtain permits a close visual supervision of the heat treatment.

Methods of forming the gaseous curtain other than by combusting gaseous fuel, such as burning liquid or solid fuel to produce the desired gaseous constituents, may obviously be used, as such variations in procedure are within the scope of the invention as defined in the appended claims.

I claim:

1. A method of heat treating comprising mixing combustible and oxygen bearing substances in predetermined proportions, combusting the mixture in a combustion chamber and utilizing the gaseous products of said combustion in a heat treating chamber as an enveloping atmosphere for the material to be heat treated.

2. A method of heat treating comprising mixing combustible and oxygen bearing substances in predetermined proportions, combusting the mixture in a combustion chamber to obtain gaseous products containing carbon monoxide and utilizing said gaseous products of combustion in a heat treating chamber as an enveloping atmosphere for the material to be heat treated.

3. A method of visual inspection and control for heat-treatment of metals in a furnace having an opening therein, comprising mixing combustible gases and oxygen bearing gases in predetermined proportions, combusting said gases, and projecting said combusted gases as a transparent colorless curtain across said opening to exclude atmospheric air.

4. A method of heat treating a metal in a furnace having an opening, comprising mixing combustible gases and oxygen bearing gases in predetermined proportions, combusting said gases, projecting said combusted gases as a transparent curtain across said opening to exclude atmospheric air and utilizing said combusted gases as an enveloping atmosphere for material in said furnace to be heat-treated.

5. A method of heat treating a metal in a furnace having an opening, comprising mixing combustible gases and oxygen bearing gases in predetermined proportions, combusting said gases to produce a resultant gas containing carbon monoxide, projecting said combusted gases as a transparent curtain across said opening to exclude atmospheric air and utilizing said combusted gases as an enveloping atmosphere for material in said furnace to be heat-treated.

6. In a method of heat treating, the steps of combusting predetermined proportions of combustible and oxygen bearing substances in a combustion chamber to obtain products of combustion of predetermined constituency, utilizing the products of combustion in a heat treating chamber as an enveloping atmosphere for material to be heat treated, and subjecting the material to be heat treated and the enveloping atmosphere to regulated heat.

7. In a method of heat treating, the steps of combusting predetermined proportions of combustible and oxygen bearing substances in a combustion chamber to obtain products of combustion containing a predetermined percentage of carbon monoxide, utilizing the products of combustion in a heat treating chamber as an enveloping atmosphere for material to be heat treated, and subjecting the material to be heat treated and the enveloping atmosphere to regulated heat.

8. A method of heat treating material in a furnace having an opening, comprising mixing predetermined proportions of combustible gases and oxygen bearing gases, combusting the gases to produce products of

combustion of predetermined constituency, utilizing part of said products of combustion as an enveloping atmosphere for material in said furnace to be heat treated, projecting part of said products of combustion as a transparent curtain across said opening to exclude atmospheric air, and subjecting the material to be heat treated and the enveloping atmosphere to regulated heat.

9. A method of heat treating material in a furnace having an opening, comprising mixing predetermined proportions of combustible gases and oxygen bearing gases, combusting the gases to produce products of combustion containing CO and of predetermined constituency, utilizing part of said products of combustion as an enveloping atmosphere for material in said furnace to be heat treated, projecting part of said products of combustion as a transparent curtain across said opening to exclude atmospheric air, and subjecting the material to be heat treated and the enveloping atmosphere to regulated heat.

In testimony whereof I affix my signature.

CARL I. HAYES.

## DISCLAIMER

1,808,721.—*Carl I. Hayes*, Providence, R. I. METHOD FOR HEAT TREATMENT. Patent dated June 2, 1931. Disclaimer filed April 19, 1938, by the assignee, *Harold C. Field;* the patentee approving and concurring.

Hereby enters this disclaimer of claims 1 and 6 of said Letters Patent.

[*Official Gazette May 24, 1938.*]