US 20100229448A1

(19) United States

(12) Patent Application Publication

Houde-Walter et al.

(10) Pub. No.: US 2010/0229448 A1

(43) Pub. Date: Sep. 16, 2010

(54) **REMOVABLE FOREGRIP WITH LASER SIGHT**

(75) Inventors: **Susan Houde-Walter**, Rush, NY (US); **Jeffrey Mock**, Rochester, NY (US); **Christopher Gagliano**, Rochester, NY (US); **William R. Houde-Walter**, Rush, NY (US)

Correspondence Address:
Stephen B. Salai, Esq.
Harter Secrest & Emery LLP
1600 Bausch & Lomb Place
Rochester, NY 14604-2711 (US)

(73) Assignee: **LaserMax, Inc.**, Rochester, NY (US)

(21) Appl. No.: **12/772,460**

(22) Filed: **May 3, 2010**

Related U.S. Application Data

(63) Continuation-in-part of application No. 12/334,111, filed on Dec. 12, 2008.

(60) Provisional application No. 61/013,906, filed on Dec. 14, 2007.

Publication Classification

(51) **Int. Cl.**

F41G 1/35	(2006.01)
F41C 23/16	(2006.01)
F41G 1/34	(2006.01)

(52) **U.S. Cl.** **42/72**; 42/115; 42/114

(57) **ABSTRACT**

A sight assembly removably attachable to a firearm includes a foregrip, a quantum cascade laser disposed within the foregrip, and a power source operably connected to the quantum cascade laser.

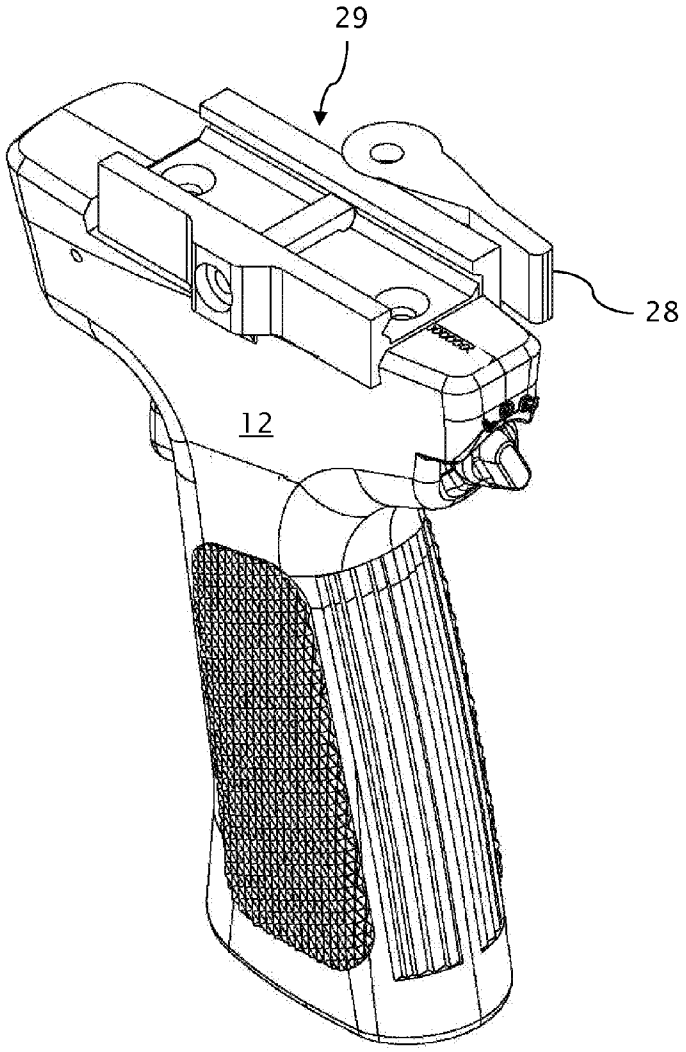

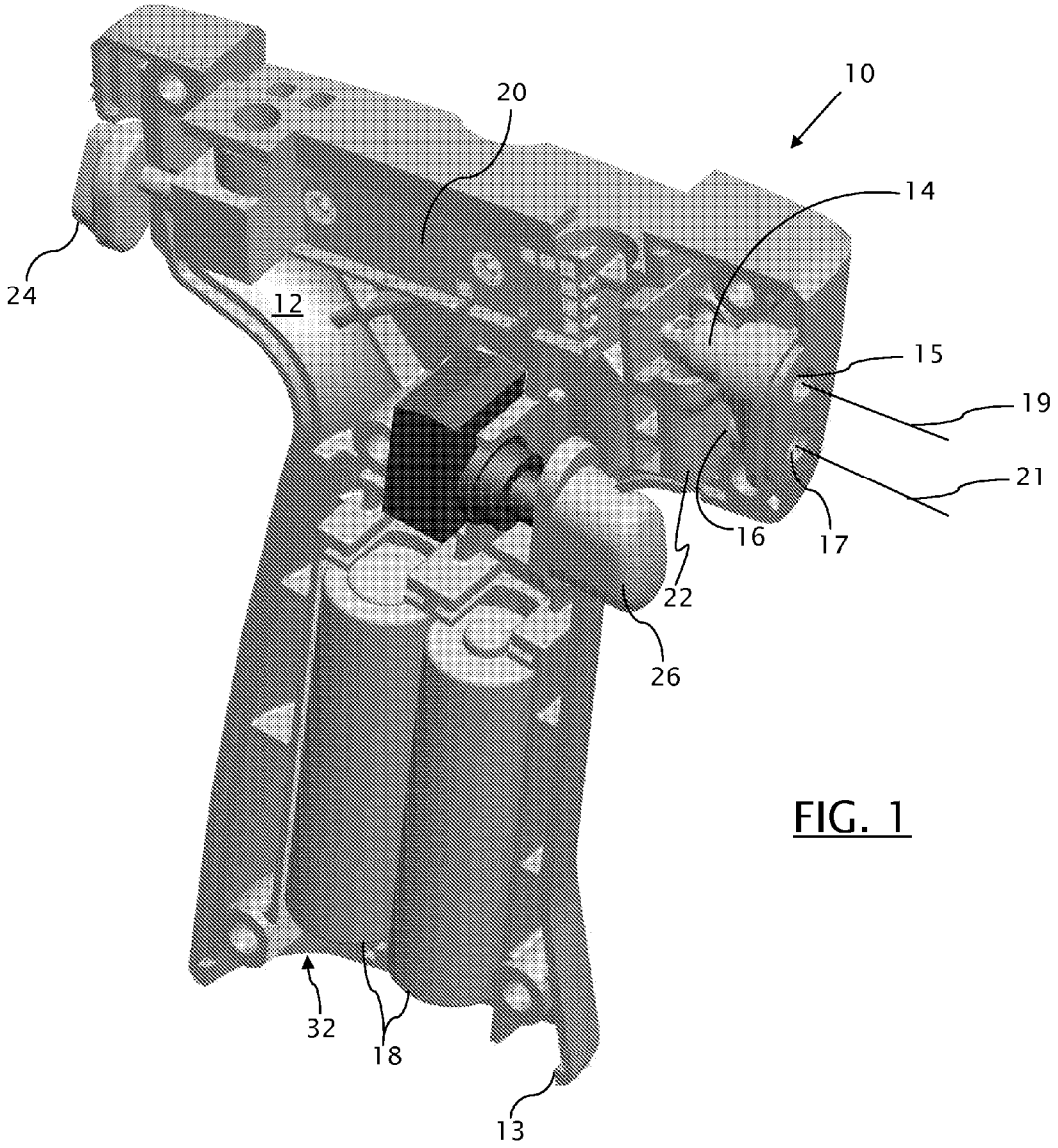

FIG. 1

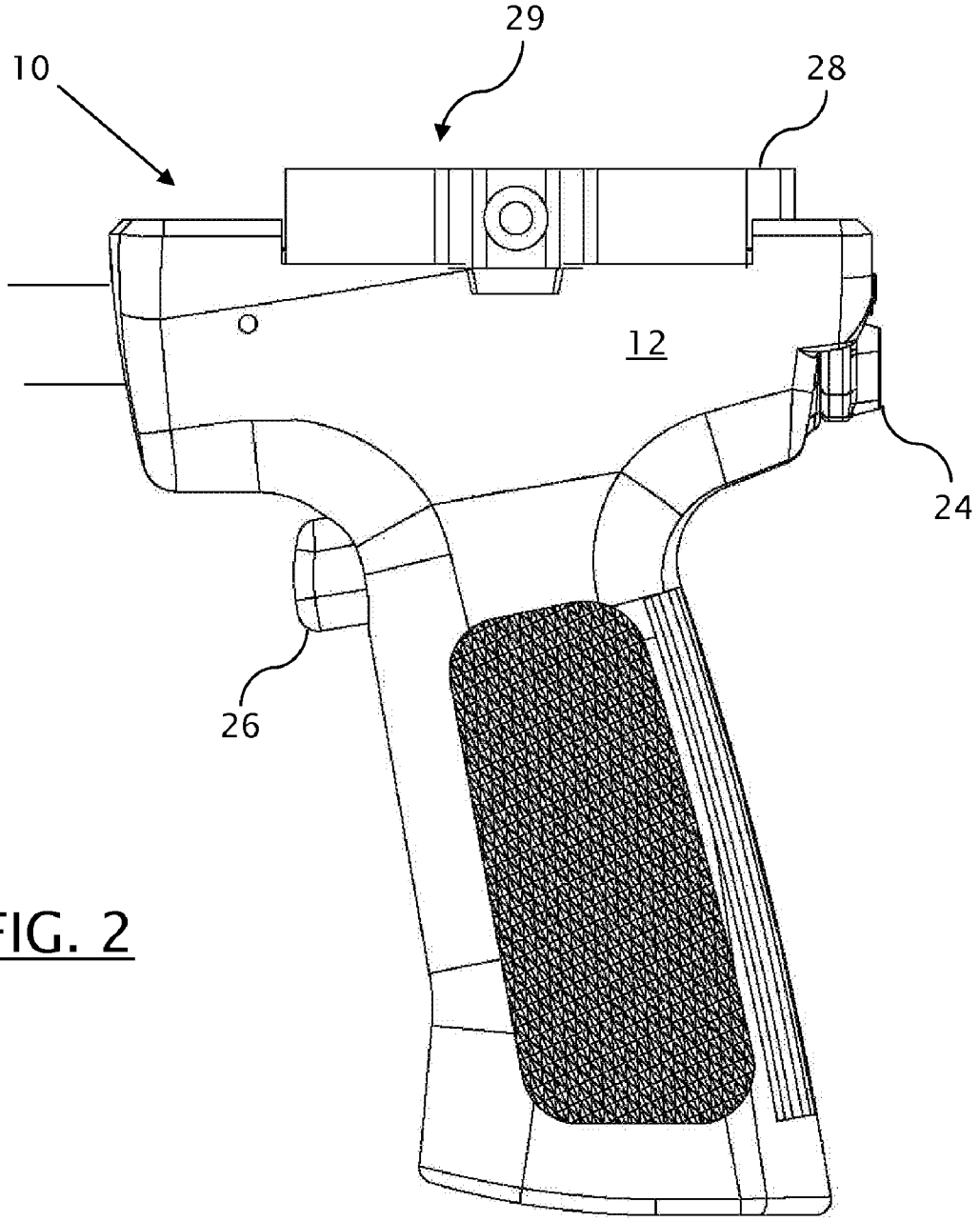

FIG. 2

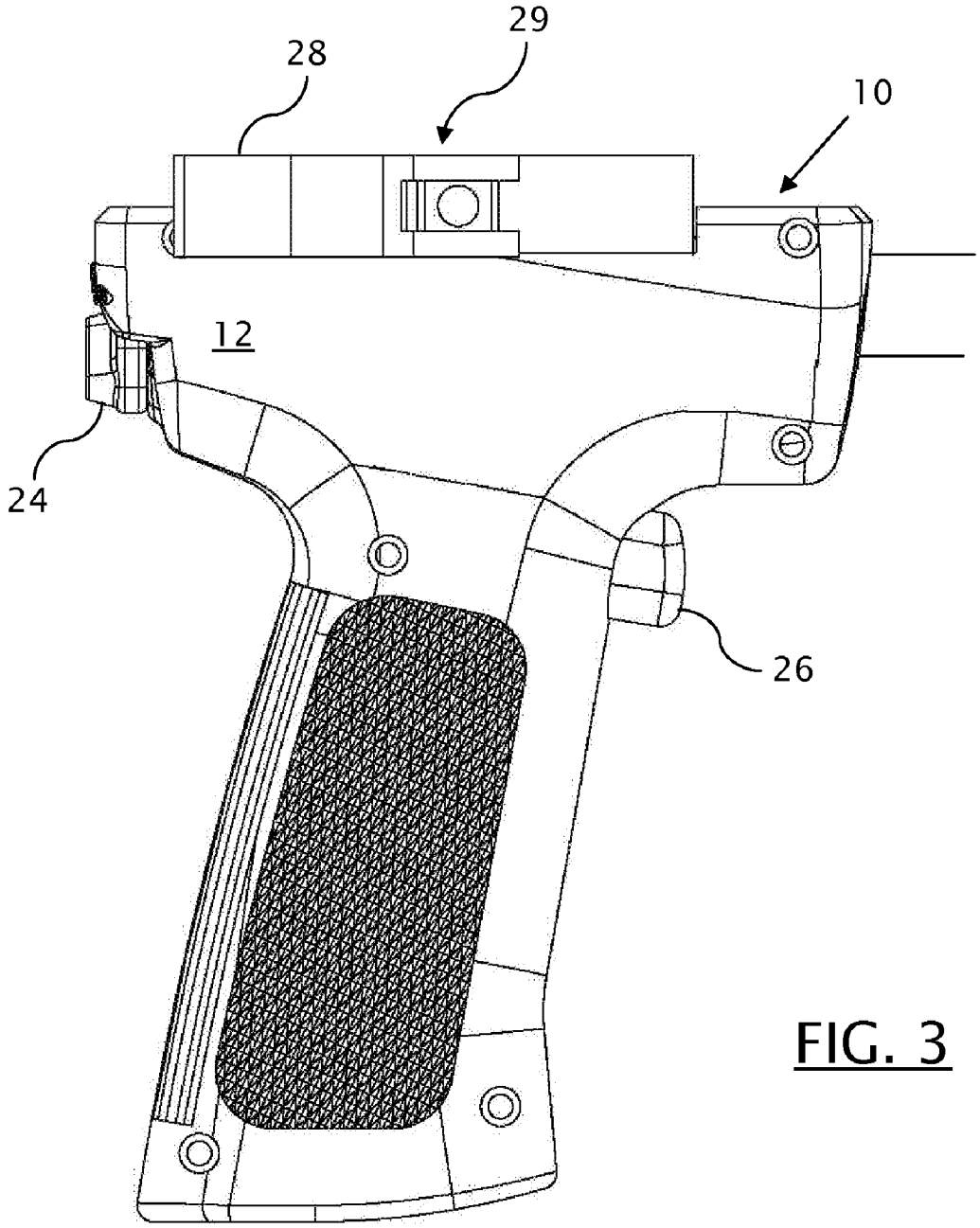

FIG. 3

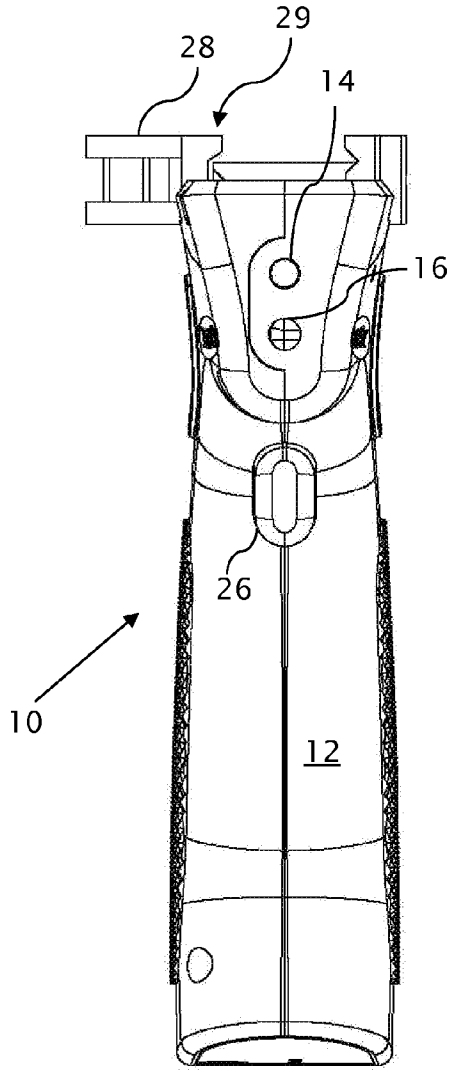

FIG. 4

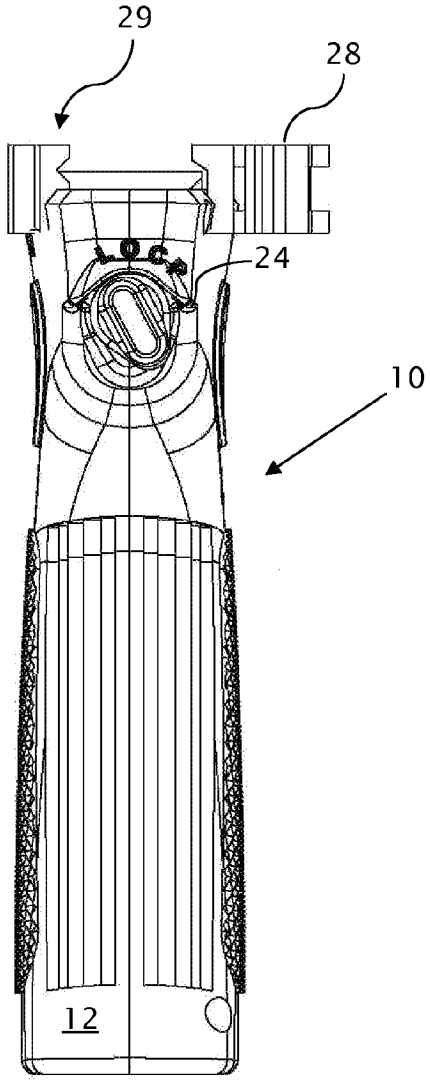

FIG. 5

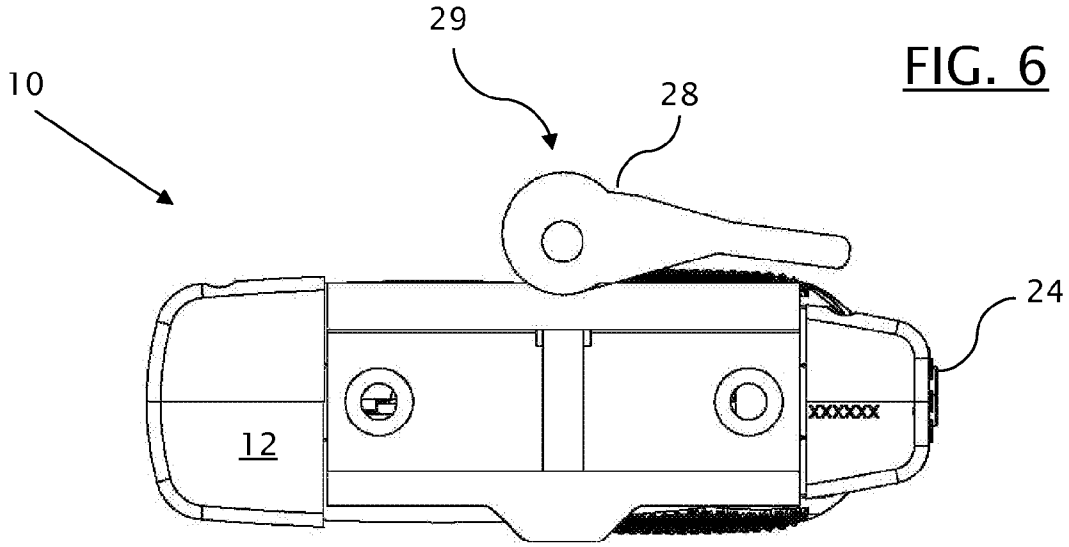

FIG. 6

FIG. 7

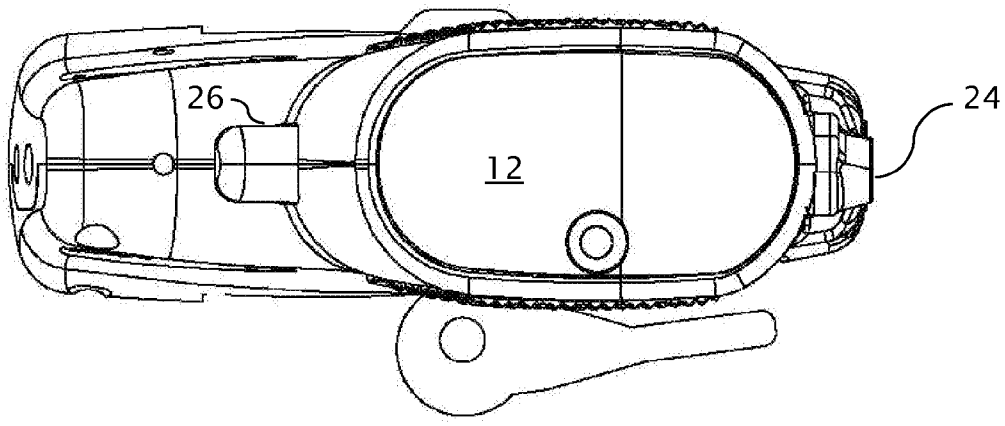

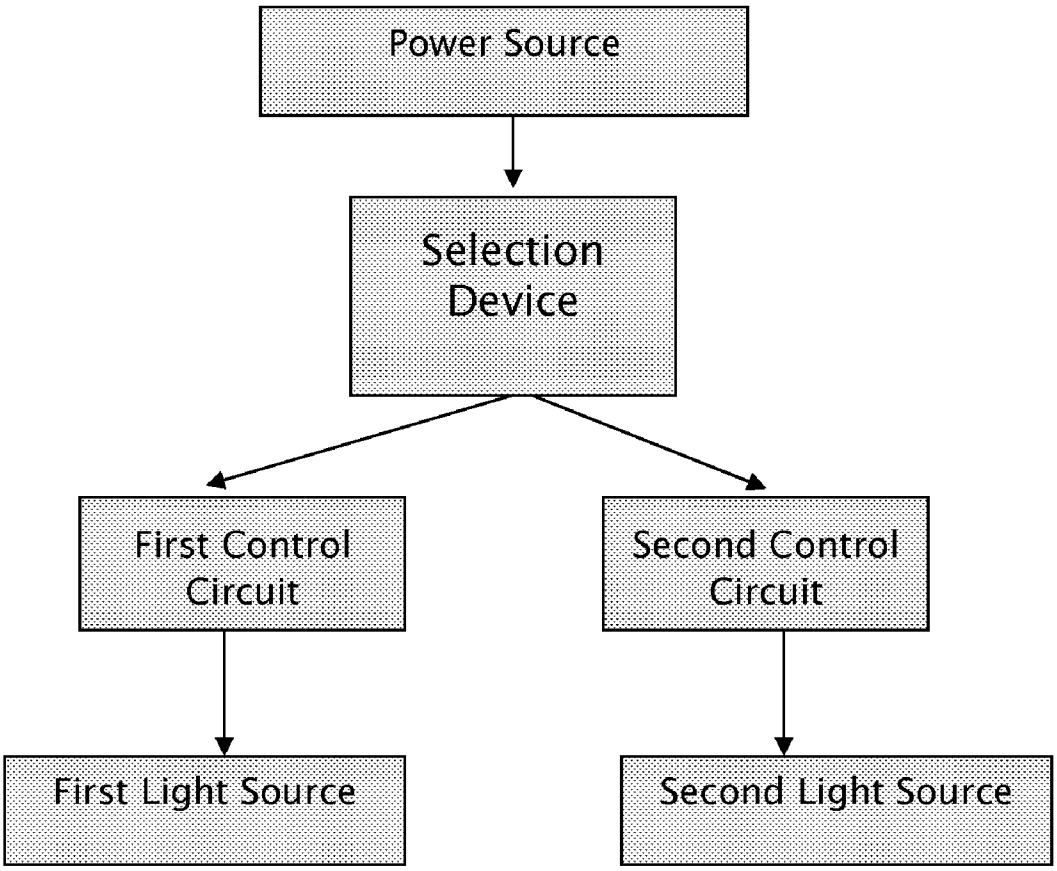
Power Source
Selection Device
First Control Circuit
Second Control Circuit
First Light Source
Second Light Source

FIG. 8

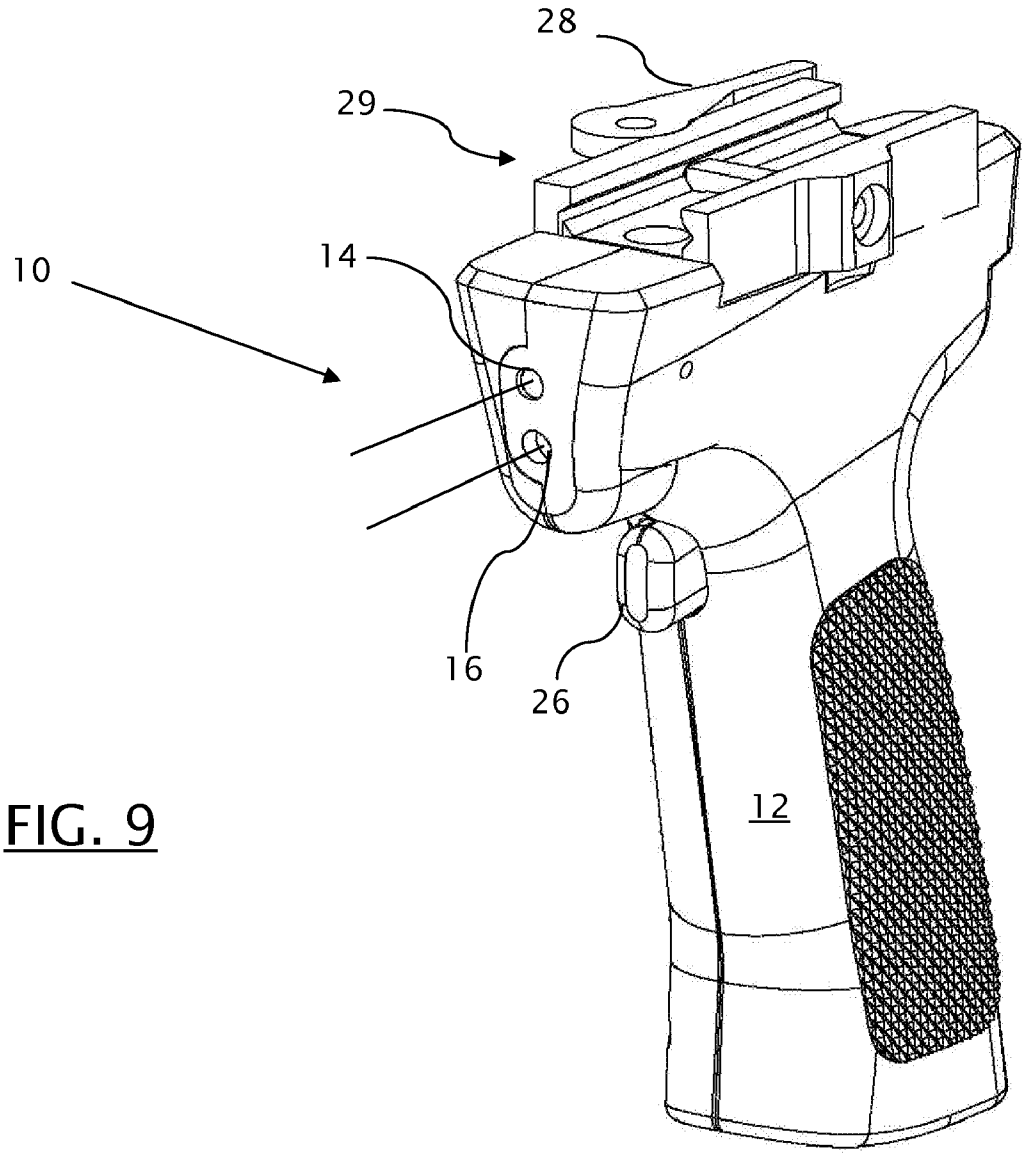

FIG. 9

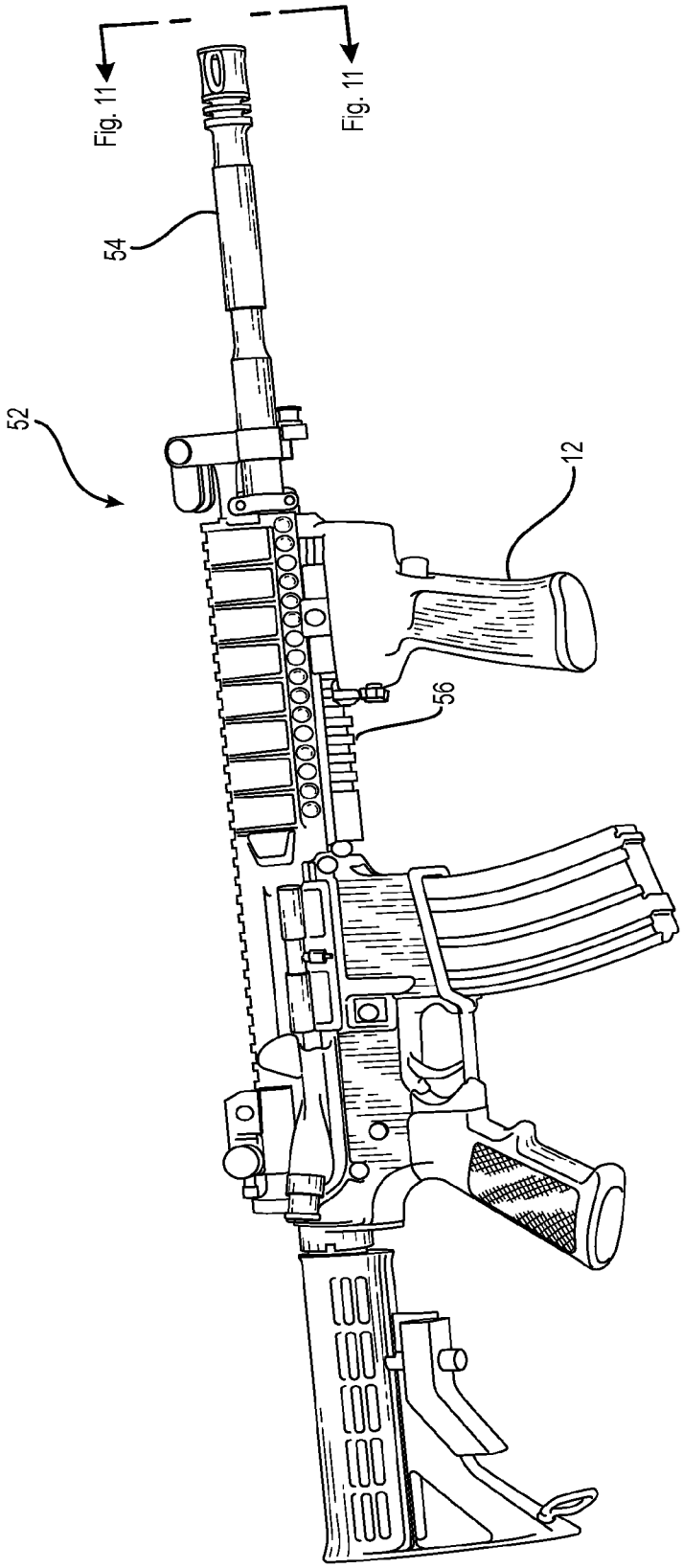

FIG. 10

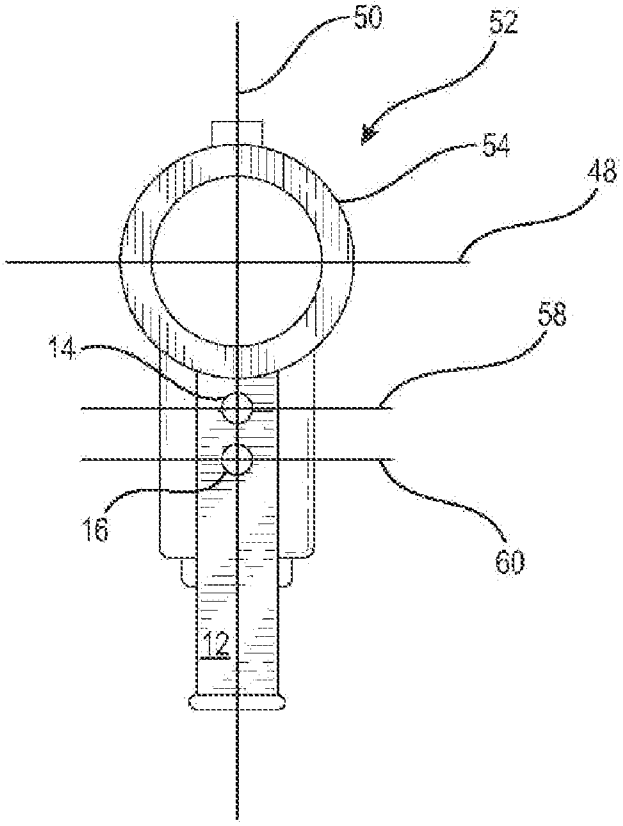

FIG. 11

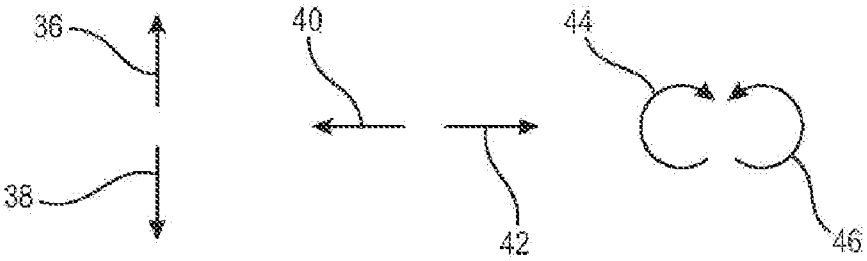

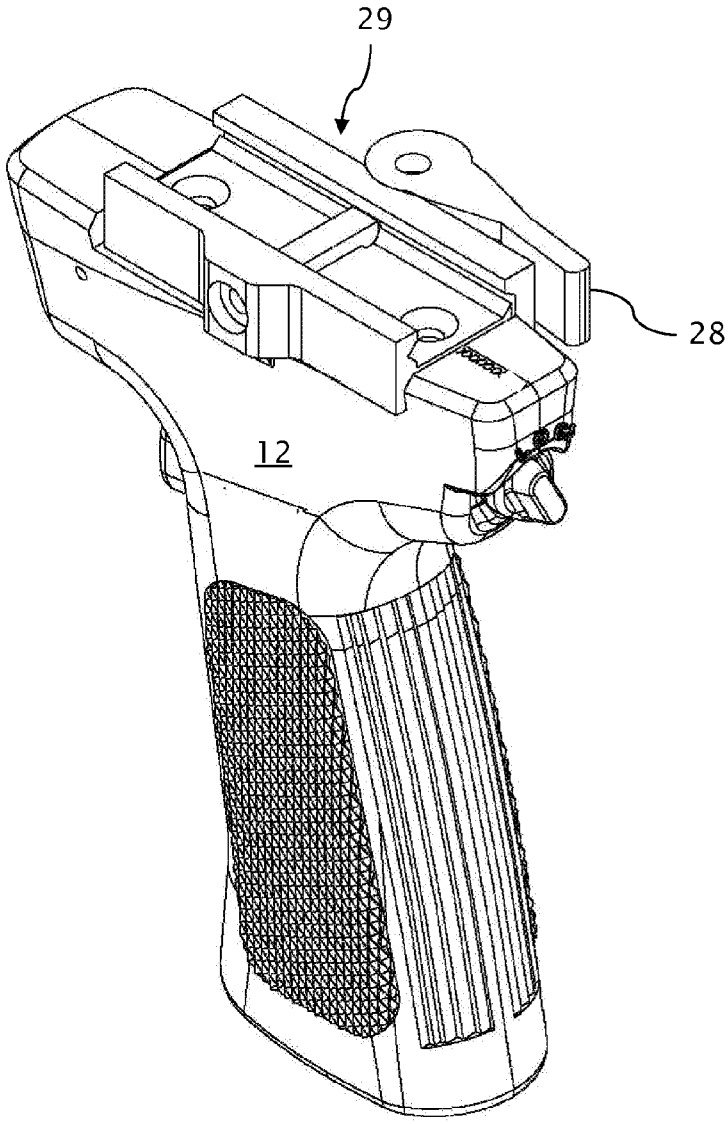

FIG. 12

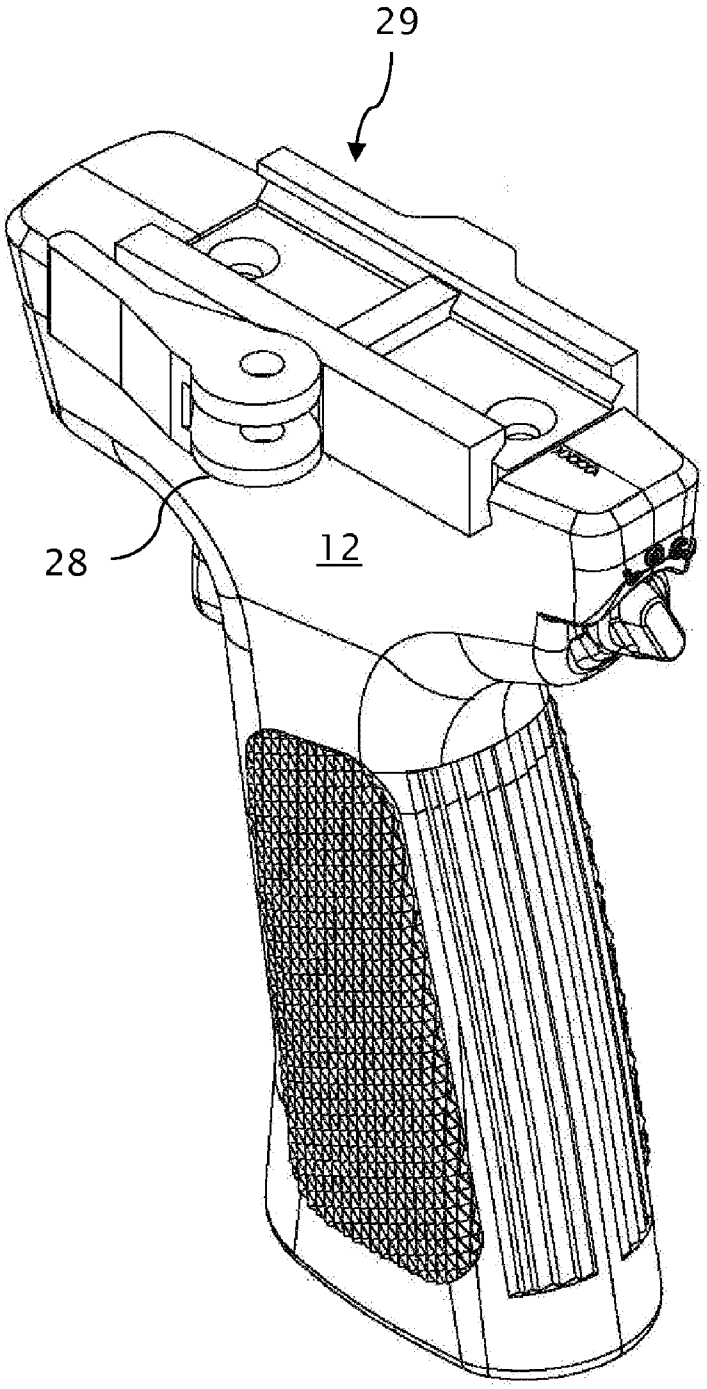

FIG. 13

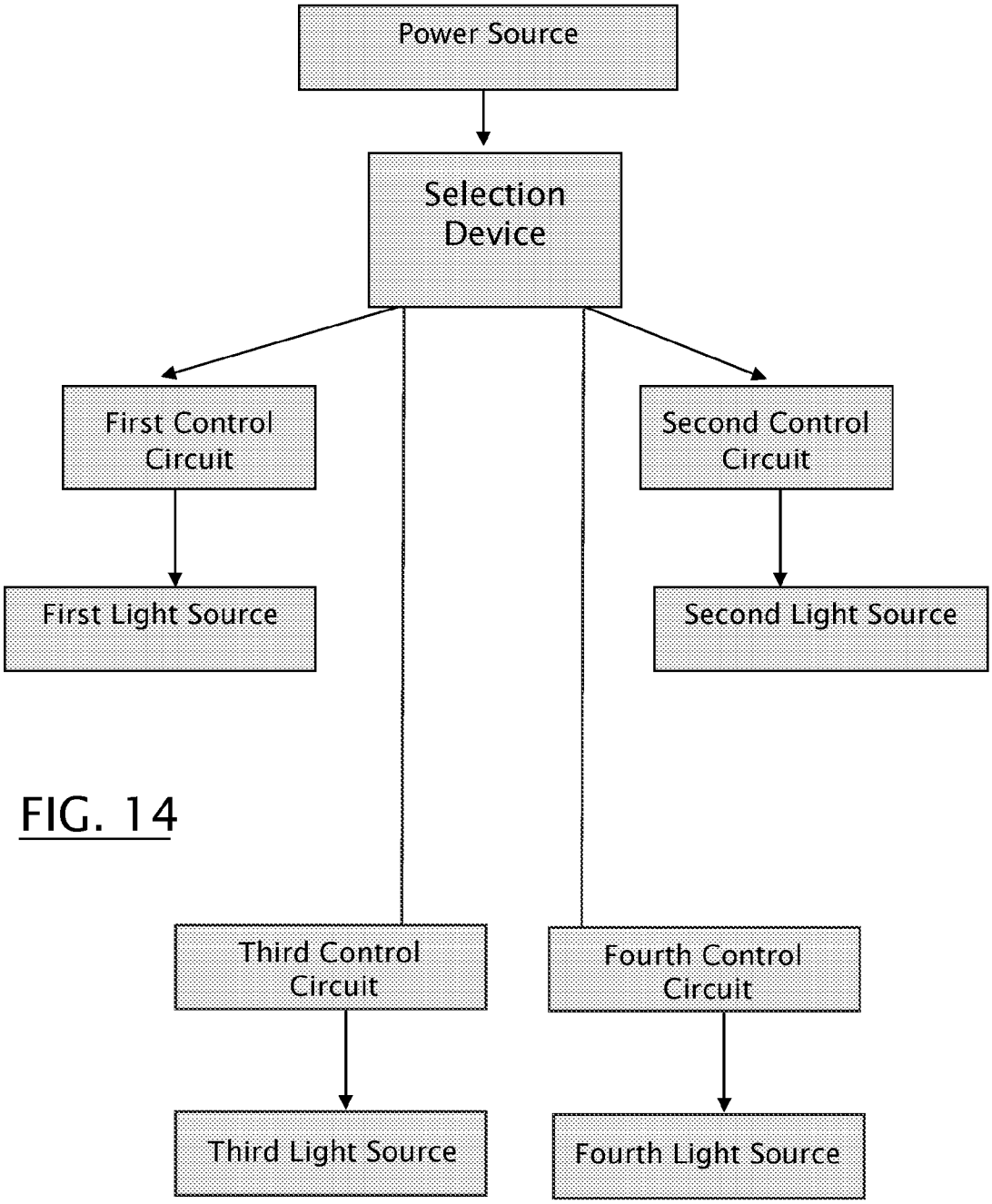
Power Source
Selection Device
First Control Circuit
Second Control Circuit
First Light Source
Second Light Source
Third Control Circuit
Fourth Control Circuit
Third Light Source
Fourth Light Source

FIG. 14

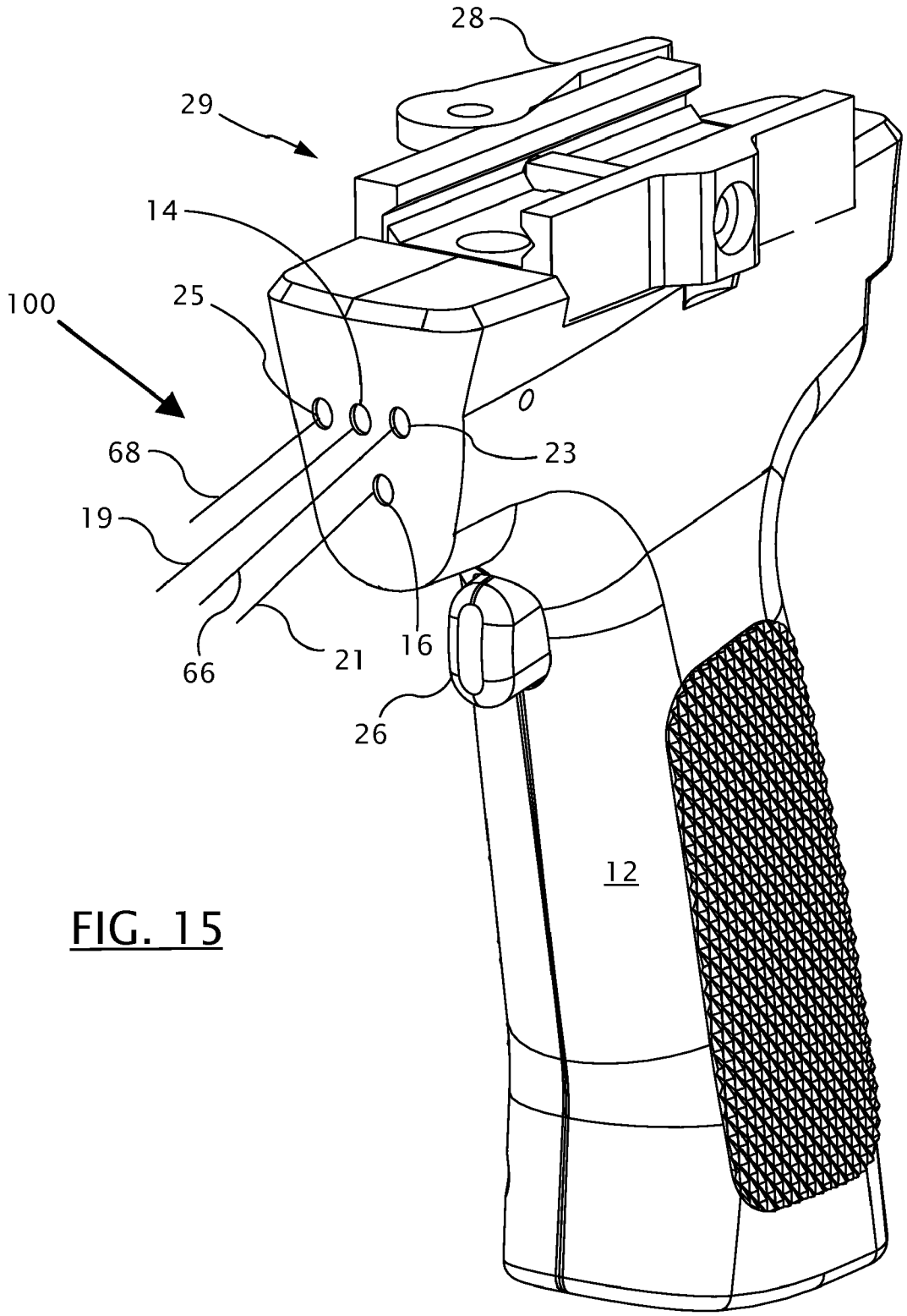

FIG. 15

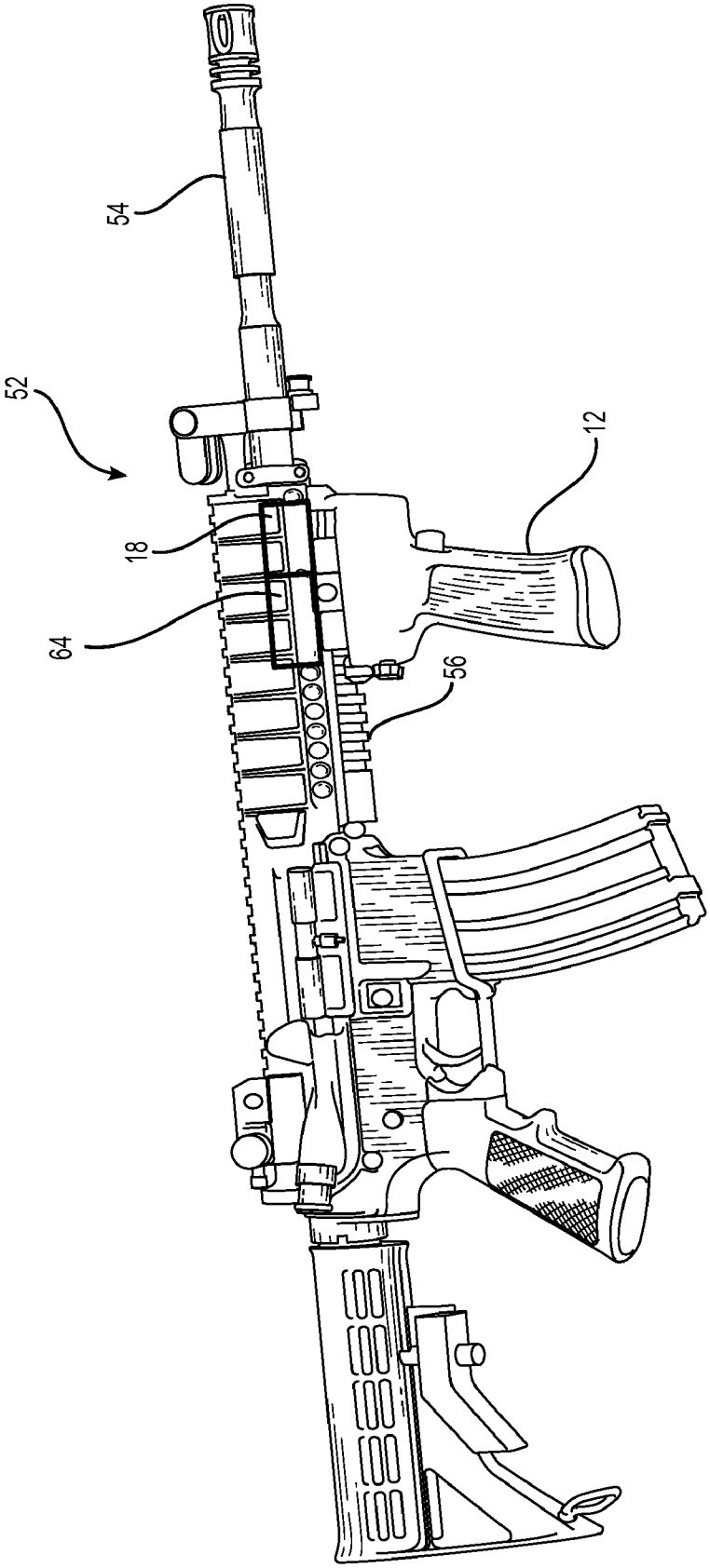

FIG. 16

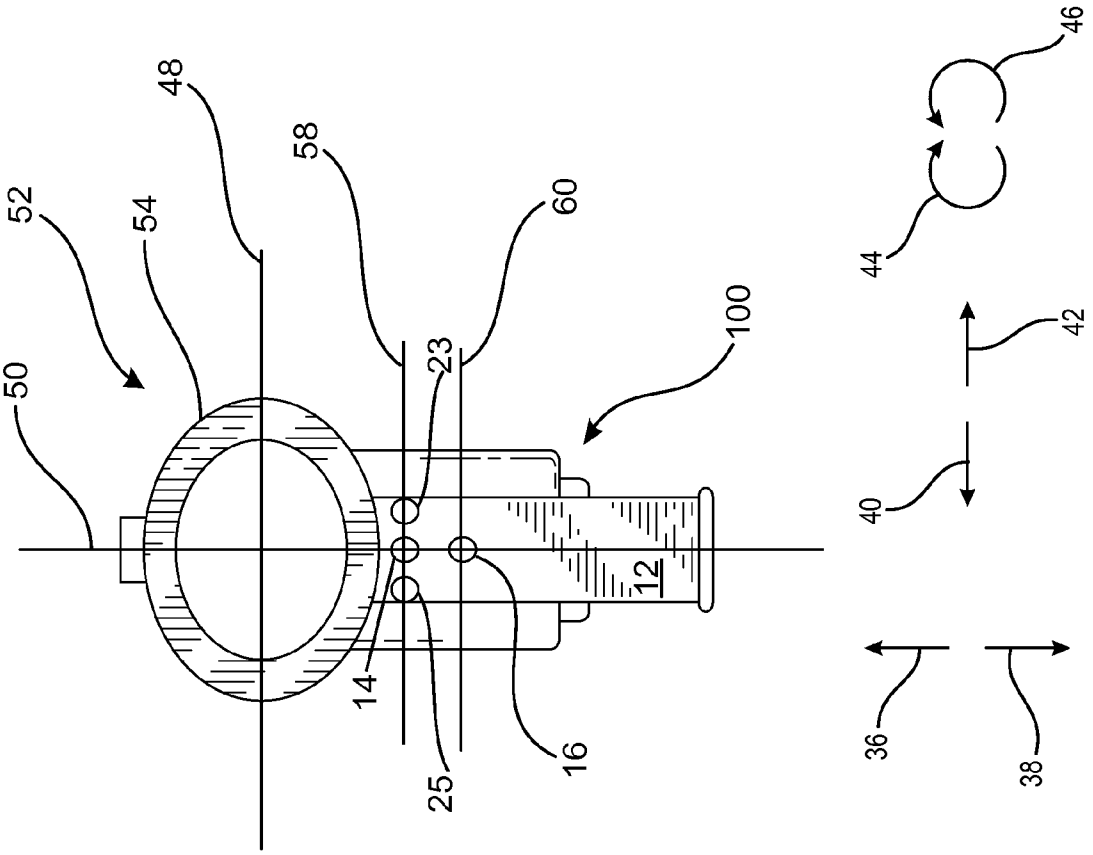

FIG. 17

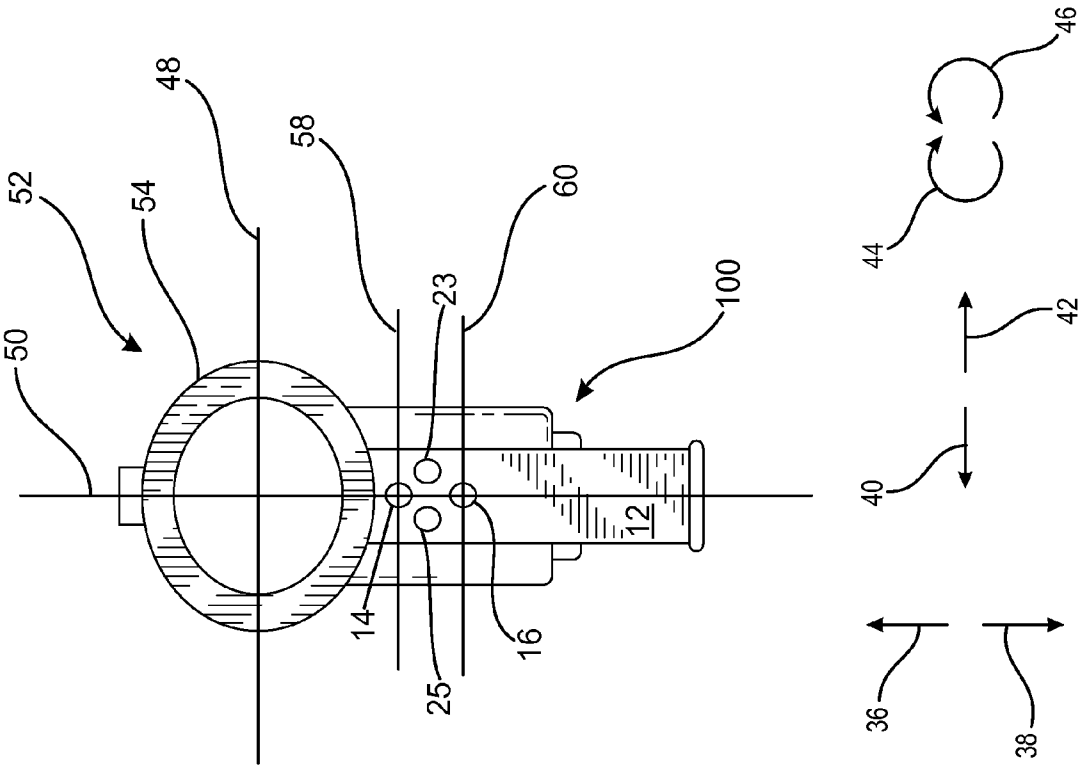

FIG. 18

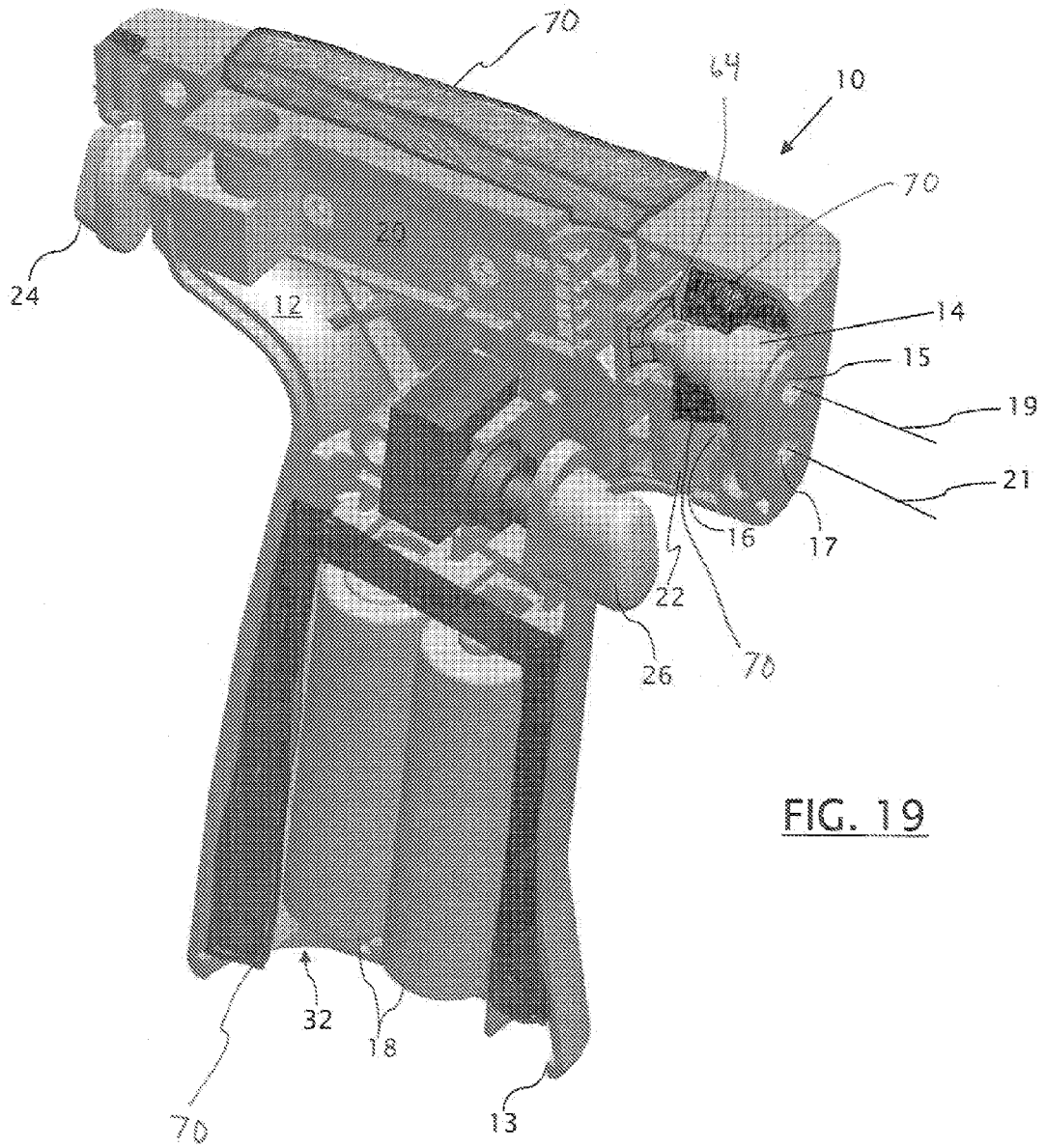

FIG. 19

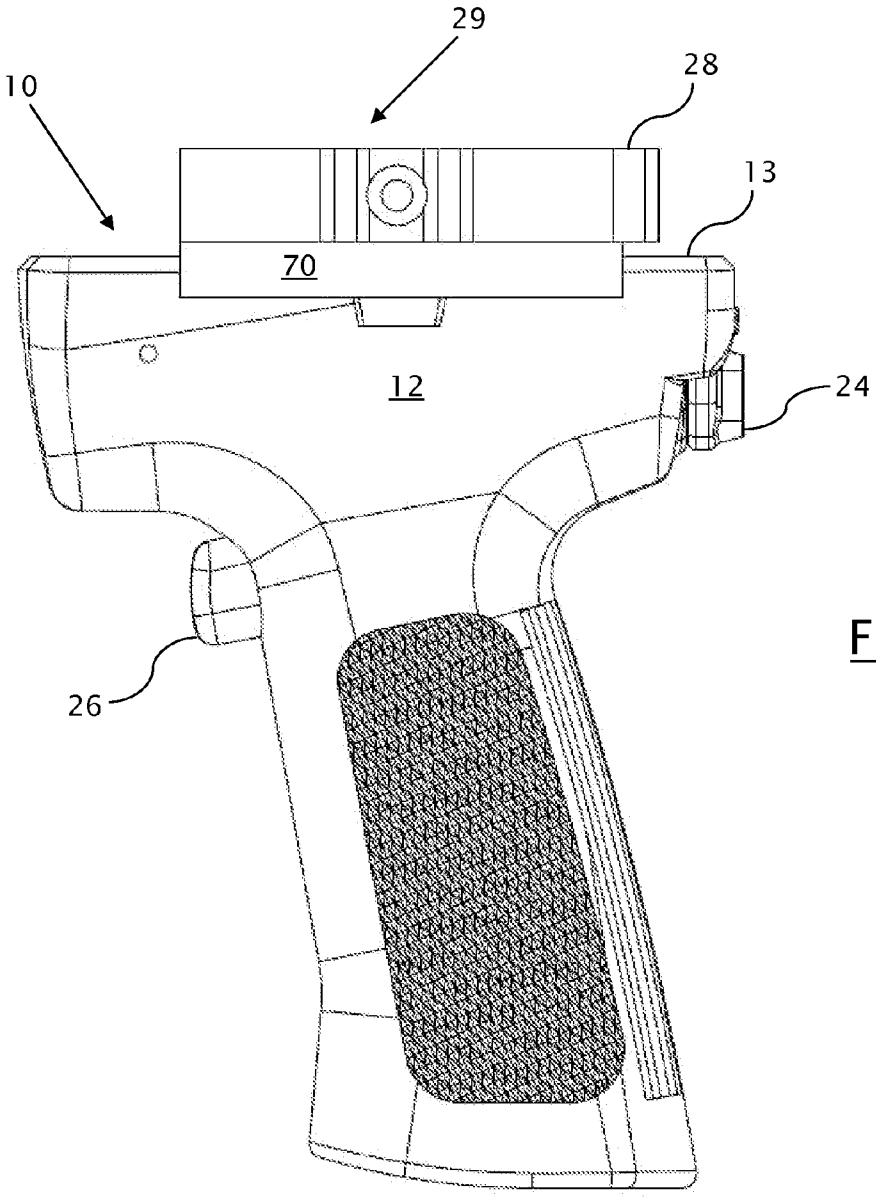

FIG. 20

REMOVABLE FOREGRIP WITH LASER SIGHT

CROSS-REFERENCE TO RELATED APPLICATIONS

[0001] The present application is a continuation-in-part of U.S. patent application Ser. No. 12/334,111, filed on Dec. 12, 2008, which claims the benefit of U.S. Provisional Patent Application No. 61/013,906, filed on Dec. 14, 2007. The entire disclosure of each of these applications is expressly incorporated herein by reference.

STATEMENT REGARDING FEDERALLY SPONSORED RESEARCH OR DEVELOPMENT

[0002] Not applicable.

REFERENCE TO A "SEQUENCE LISTING"

[0003] Not applicable.

BACKGROUND OF THE INVENTION

[0004] 1. Field of the Invention

[0005] The present invention relates to firearms, and, in particular, to sight assemblies used with firearms.

[0006] 2. Description of Related Art

[0007] It is now common in law enforcement and certain military operations for weapons to be equipped with a laser sighting device, that is, a laser mounted on the weapon that propagates a relatively narrow, intense laser light beam to a target so as to produce a spot on the target essentially where the projectile will intercept the target if the weapon is discharged. This enables the weapon to be aimed precisely by pointing the weapon so that the spot lies on the target at the point where the person using the weapon wants the projectile to strike the target. Such a laser sighting device is disclosed, for example, in Toole et al. U.S. Pat. No. 5,435,091. Laser sights are particularly effective as sighting devices because the lasers do not require users to align an eye with a sighting device, which can limit or obscure the user's view of the targets or their surroundings.

[0008] Laser sights have been mounted from conventional accessory mounts, such as Picatinny rails, in the same way that scopes and other accessories have been mounted on firearms. Typically, the laser sight modules include receptors for engaging the accessory mounts on the firearms. For example, dovetail-type receptors have been formed in laser sight modules for engaging Picatinny rails on the firearms. Laser sights have been mounted from different types of accessory mounts on the firearms, including from other types of rails, using mating receptors and have also been mounted on firearms using clamping devices or other forms of attachment for engaging firearm barrels, frames, or other components that are not otherwise intended as accessory mounts.

[0009] Often, it is desirable to mount the laser sights so that the sights can be removed and transferred between firearms, generally with as little adjustment as possible. Again, rails, particularly Picatinny-type rails, have been used for this purpose. The rails can be formed integral with the firearm frames or clamped or otherwise attached to the firearm barrels or frames.

[0010] Both the accessory mounts presented on firearms and the receptors for engaging them tend to offset the laser sights from the barrels. Alternative adapter structures used for attaching laser sights to firearm components that are not otherwise arranged as mountings also tend to offset the laser sights from firearm barrels. Among the accessory mounts, rail mounts, such as Picatinny rails, offset laser sights by the space occupied by the rails themselves and any attachments for fixing the rails to the firearm barrels or frames. In addition, the receptors used for engaging the rails can take up more space and displace the laser sights farther from firearm barrels. The known laser sights mounted in this way are also exposed to jarring and can encumber the handling or operation of firearms, particularly as the laser sights are mounted at increasing offset from firearm barrels. In addition, known laser sights are only configured to emit a single laser and are not configured to operate multiple lasers using a single control circuit.

[0011] In addition to the drawbacks discussed above, known sight assemblies for firearms also suffer from limited functionality. In particular, while known sight assemblies may include, for example, locating lasers, markers, or other signal emitters, such signal emitters are typically inefficient and potentially dangerous for use in combat, law enforcement, reconnaissance, or other like areas. For instance, the beams, lasers, signals, or other such signals emitted by known signal emitters may be visible by conventional night vision goggles or other like viewing devices. Such viewing devices are widely available and used by both U.S. troops and opposition groups. Thus, the signals emitted by sight assemblies equipped with known signal emitters are detectable by opposition groups, making stealth operation, targeting, identification, or other operations difficult if not impossible.

[0012] In addition, some known signal emitters, such as thermal markers or other devices emitting radiation, pulse signatures, or other signals in the thermal band, may have a relatively limited range. For example, the signals emitted by known devices are not easily detected beyond a range of approximately one km. While this limited range may be relevant in a tightly confined, troop-focused combat arena, signals emitted by such thermal markers or other known signal emitters may not be easily seen from great distances, thus making locating, for example, troops utilizing weapons having a sight assembly with such a signal emitter difficult.

[0013] Accordingly, the disclosed systems and methods are directed toward overcoming one or more of the problems set forth above.

SUMMARY OF THE INVENTION

[0014] In an exemplary embodiment of the present disclosure, a sight assembly for a firearm includes a foregrip removably attachable to the firearm, a first light source disposed within the foregrip, and a different second light source disposed within the foregrip. The assembly also includes a power source electrically connected to the first and second light sources, and a control circuit configured to control activation of the first and second light sources.

[0015] In such an exemplary embodiment, a position of the first light source is adjustable relative to a position of the second light source. In addition, the assembly further includes an adjustment assembly configured to position the first and second light sources relative to the foregrip, a selection device configured to allow activation of at least one of the first light source and the second light source at a time, and an activation device configured to activate the one of the first light source and the second light source. Activating the one of the first light source and the second light source produces one of a continuous laser beam and a pulsed laser beam.

[0016] In such an exemplary embodiment, the first and second light sources include one of a green laser, a red laser, an infra-red laser, an infra-red LED, a white and colored LED, a class 3A laser having an output of less than 5 mW, a search light, a traveling light, and a guide light. In addition, the assembly also includes a locking assembly configured to substantially immobilize the foregrip with respect to the firearm. Moreover, the power source comprises at least one battery and the at least one battery comprises one of a plurality of AA batteries and a DL-123 battery. In addition, the power source is disposed within the foregrip and the control circuit is disposed within the foregrip, the first light source is a laser, and the second light source is an LED.

[0017] In another exemplary embodiment of the present disclosure, a method of manufacturing a sight assembly for a firearm includes adjustably mounting a first light source and a second light source within a foregrip of the firearm and connecting the first and second light sources to a control circuit configured to activate the first and second light sources in response to a control signal.

[0018] In such an exemplary embodiment, the control circuit is configured to direct power to one of the first and second light sources while the other of the first and second light sources is deactivated. The exemplary method further includes mounting a selection device to the foregrip, the selection device being configured to allow activation of at least one of the first light source and the second light source at a time, mounting an activation device to the foregrip, the activation device being configured to activate the one of the first light source and the second light source. Such an embodiment also includes defining a power source compartment within the foregrip, the power source compartment being configured to receive a removable power source. Such an embodiment also includes defining a storage compartment within the foregrip configured to receive a removable sight assembly adjustment tool, and securing an adjustment assembly to the foregrip, the adjustment assembly configured to enable adjustment of the first light source relative to the second light source.

[0019] In still another exemplary embodiment of the present disclosure, a method of activating a component of a sight assembly for a firearm includes connecting a foregrip to a mounting rail of the firearm, selecting between a first light source and a second light source disposed substantially within the foregrip, and activating the selected light source.

[0020] In such an exemplary embodiment, activating the selected light source includes sending a control signal to the selected light source via a control circuit electrically connected to the first and second light source, and the control signal originates at an activation device mounted to the foregrip. In addition, activating the selected light source includes directing a beam of light in the direction of a target and manipulating an activation device mounted to the foregrip. The activation device is substantially noise-free. Moreover, in such an exemplary embodiment, selecting between the first light source and the second light source includes manipulating a selection device mounted to the foregrip, and the selected light source comprises a warning laser and includes a mechanism configured to assist in removably attaching the foregrip to the firearm wherein the clamping mechanism is reversible and further includes a third light source disposed within the foregrip.

[0021] In still another exemplary embodiment, the first light source comprises a laser and the second light source comprises a range finder wherein at least one of the first and second light sources includes a laser having an output of greater than 5 mW. In addition, at least one of the first and second light sources includes a laser having friend or foe data encoding. Such exemplary embodiment activates the one of the first light source and the second light source produces one of a continuous laser beam and a pulsed laser beam. In another embodiment of the present disclosure, the at least one battery comprises one of a plurality of AA batteries and a DL-123 battery.

[0022] In still another embodiment of the present disclosure, a sight assembly for a firearm includes a foregrip removably attachable to the firearm, and a first light source disposed within the foregrip, a vertical axis of the first light source being collinear with a vertical axis of a firearm barrel when the foregrip is attached to the firearm. Such an embodiment further includes a second light source disposed within the foregrip, a vertical axis of the second light source being collinear with the vertical axis of the firearm barrel when the foregrip is attached to the firearm. In addition, the foregrip is removably attachable to a rail of the firearm and the foregrip is removably attachable beneath the firearm barrel. The first light source includes a laser, and the sight assembly further includes a second light source disposed within the foregrip. In an exemplary embodiment, the second light source is a travelling light and an adjustment tool is disposed within a power source compartment of the foregrip. The assembly further includes a plurality of AA batteries disposed within the power source compartment and a reversible clamping mechanism configured to assist in removably attaching the foregrip to the firearm. In addition, the foregrip is removably attachable to a plurality of different firearm rails.

[0023] In such an exemplary embodiment, the foregrip further includes a selection device configured to transition the first light source between a continuous and a pulsed mode of operation. In another embodiment, the foregrip further includes an activation device configured to operate the first light source in one of a momentary mode and a latched mode.

[0024] In another exemplary embodiment of the present disclosure, a sight assembly removably attachable to a firearm includes a foregrip, a quantum cascade laser disposed within the foregrip, and a power source operably connected to the quantum cascade laser.

[0025] In such an exemplary embodiment, the quantum cascade laser produces a beam having a wavelength between approximately 2 μm and approximately 30 μm. In addition, the power source is disposed external to the foregrip. In such an exemplary embodiment, the assembly further includes a heat shield disposed between the quantum cascade laser and a portion of the foregrip such as, for example, an outer surface of the foregrip housing grasped by an operator of the firearm. In another exemplary embodiment, the assembly includes a heat shield disposed between the quantum cascade laser and a barrel of the firearm.

[0026] In such an exemplary embodiment, the assembly includes a cooling element thermally connected to the quantum cascade laser. The cooling element is active and is disposed within the foregrip. Such an exemplary assembly further includes a second light source with the foregrip different than the quantum cascade laser.

[0027] In a further exemplary embodiment of the present disclosure, a sight assembly removably attachable to a firearm includes a quantum cascade laser adjustably mounted within a foregrip, a second light source disposed within the

foregrip, and a power source electrically connected to the quantum cascade laser and the second light source. In such an exemplary embodiment, a position of the second light source is adjustable relative to a position of the quantum cascade laser. Such an exemplary embodiment further includes an adjustment assembly configured to position the quantum cascade laser and the second light source relative to the foregrip, and the adjustment assembly positions the quantum cascade laser in unison with the second light source. In such an exemplary embodiment, the quantum cascade laser and the second light source would be co-aligned.

[0028] In such an exemplary embodiment, the assembly also includes a cooling element thermally connected to the quantum cascade laser, the power source is disposed within or external to the foregrip, and a position of at least one of the quantum cascade laser and the second light source can be adjusted while the foregrip is connected to the firearm.

[0029] In another exemplary embodiment of the present disclosure, a sight assembly for a firearm includes a quantum cascade laser disposed within a foregrip, and a second light source disposed within the foregrip. In such an assembly, a vertical axis of at least one of the quantum cascade laser and the second light source is co-linear with a vertical axis of a firearm barrel when the foregrip is attached to the firearm.

[0030] In such an exemplary embodiment, the quantum cascade laser and the second light source are aligned with the vertical axis of the barrel. In addition, such an exemplary assembly also includes a third light source disposed within the foregrip. A horizontal axis of the third light source is collinear with a horizontal axis of at least one of the quantum cascade laser and the second light source.

[0031] In still another exemplary embodiment of the present disclosure, a sight assembly for a firearm includes a foregrip and a first light source disposed within the foregrip. The first light source emits a beam having a wavelength between approximately 2 μm and approximately 30 μm. The sight assembly also includes a second light source different from the first light source adjustably mounted with respect to the first light source within the foregrip.

BRIEF DESCRIPTION OF THE DRAWINGS

[0032] FIG. **1** is a cross-sectional view of a sight assembly according to an exemplary embodiment of the present disclosure.

[0033] FIG. **2** is a diagrammatic illustration of a side of the sight assembly of FIG. **1** according to an exemplary embodiment of the present disclosure.

[0034] FIG. **3** is another diagrammatic illustration of a side of the sight assembly of FIG. **1** according to an exemplary embodiment of the present disclosure.

[0035] FIG. **4** is still another diagrammatic illustration of a front of the sight assembly of FIG. **1** according to an exemplary embodiment of the present disclosure.

[0036] FIG. **5** is yet another diagrammatic illustration of a back of the sight assembly of FIG. **1** according to an exemplary embodiment of the present disclosure.

[0037] FIG. **6** is another diagrammatic illustration of a top of the sight assembly of FIG. **1** according to an exemplary embodiment of the present disclosure.

[0038] FIG. **7** is still another diagrammatic illustration of a bottom of the sight assembly of FIG. **1** according to an exemplary embodiment of the present disclosure.

[0039] FIG. **8** is a sight assembly control schematic according to an exemplary embodiment of the present disclosure.

[0040] FIG. **9** is an isometric illustration of the sight assembly of FIG. **1** according to an exemplary embodiment of the present disclosure.

[0041] FIG. **10** is an isometric illustration of the sight assembly of FIG. **1** removably attached to a firearm according to an exemplary embodiment of the present disclosure.

[0042] FIG. **11** is an illustration of a firearm barrel axis in vertical alignment with an axis of a light source according to an exemplary embodiment of the present disclosure.

[0043] FIG. **12** is an isometric illustration of the sight assembly of FIG. **1** according to another exemplary embodiment of the present disclosure.

[0044] FIG. **13** is an isometric illustration of the sight assembly of FIG. **1** according to still another exemplary embodiment of the present disclosure.

[0045] FIG. **14** is a sight assembly control schematic according to another exemplary embodiment of the present disclosure.

[0046] FIG. **15** is an isometric illustration of a sight assembly according to another exemplary embodiment of the present disclosure.

[0047] FIG. **16** is an isometric illustration of the sight assembly FIG. **15** removably attached to a firearm according to an exemplary embodiment of the present disclosure.

[0048] FIG. **17** is an illustration of a firearm barrel axis in vertical alignment with an axis of light sources according to another exemplary embodiment of the present disclosure.

[0049] FIG. **18** is an illustration of a firearm barrel axis in vertical alignment with an axis of light sources according to still another exemplary embodiment of the present disclosure.

[0050] FIG. **19** is a cross sectional view of a sight assembly according to a further exemplary embodiment of the present disclosure.

[0051] FIG. **20** is a diagrammatic illustration of a side of the sight assembly of FIG. **19** according to an exemplary embodiment of the present disclosure.

DETAILED DESCRIPTION OF THE DRAWINGS

[0052] FIGS. **1-7**,**9-13** and **15-20** illustrate sight assemblies according to exemplary embodiments of the present disclosure. As shown in FIG. **1**, an exemplary sight assembly **10** includes, for example, a foregrip **12** configured to be removably attached to a firearm of any type. The assembly **10** also includes a first light source **14** and a second light source **16**, and both of the light sources **14**, **16** are disposed within the foregrip **12**. As will be described in greater detail below, exemplary sight assemblies of the present disclosure may also include three, four, or more light sources. In an exemplary embodiment, the foregrip **12** may define a housing **13**, and at least the first light source **14** and the second light source **16** may be disposed substantially within the housing **13** of the foregrip **12**. In such an exemplary embodiment, each component of the light sources **14**, **16** may be disposed within the housing **13** and the housing **13** may define one or more orifices **15**, **17** through which light beams **19**, **21**, signals, or other like radiation emitted from the light sources **14**, **16** may exit the housing **13**.

[0053] The light sources **14**, **16** can comprise, for example, any of a variety of lasers. Typically, the light sources **14**, **16** are self-contained, and one or more of the light sources **14**, **16** may include a lens. The light sources **14**, **16** can comprise, for example, any combination of a green laser, a red laser, a quantum cascade laser (QCL), an infra-red laser, an infra-red light emitting diode (LED), a white and colored LED, a laser

having an output of approximately 5 mW (it is understood that lasers having an output greater than approximately 5 mW or less than approximately 5 mW may also be used), a search light, a laser having an output of greater than 5 mW, a guide light, a travelling light, a warning laser, a range finder, an illuminating light such as a flashlight, and a communication laser. The light sources **14**, **16** can also comprise a laser capable of and/or otherwise having friend or foe data encoding. In an exemplary embodiment, one or more of the light sources **14**, **16** may emit a thermal beam, pulse, or signal, and in such an exemplary embodiment, a thermal imager may be used to view the thermal beam, pulse, or signal.

[0054] In exemplary embodiments of the sight assemblies described herein wherein at least one of the light sources **14**, **16** comprises a QCL, the QCL may be configured to emit a beam, pulse, signal, and/or other type of radiation having a wavelength between approximately 2 μm and approximately 30 μm. The QCLs described herein may be, for example, a laser emitting structure disposed within, adjustably mounted within, and/or otherwise retained by the housing **13** of the foregrip **12**. Such QCLs may be configured, via one or more lenses, to produce a beam extending along a focused beam path extending from the QCL external to the housing **13**. Alternatively, such lenses may be omitted, and the beam, pulse, or signal produced by the QCL may be widely divergent or otherwise dispersed due to the nature and configuration of the QCL itself.

[0055] In an exemplary embodiment, the QCL may be selected to operate in ambient temperature conditions while producing a beam or other such signal having a wavelength between approximately 2 μm and approximately 30 μm, with preferred wavelengths of approximately 2 μm to approximately 5 μm (mid-range) or approximately 8 μm to approximately 30 μm (long-range). It is further contemplated that the exemplary light sources **14**, **16** may comprise a plurality of QCLs, thereby providing for a sight assembly configured to produce beams having a plurality of different useful wavelengths.

[0056] Any of the QCLs employed by the sight assemblies described herein may be operably connected to an appropriate driver (not shown) to provide and/or otherwise produce such desired wavelengths. It is understood that such a driver can be constructed to provide either pulsed or continuous wave operation of the QCL. The rise/fall time of the pulse, compliance voltage, and current provided to the QCL maybe selected to minimize power consumption and heat generation of the QCL. These parameters may also be selected to produce a desirable beam or signal signature for friend or foe identification. It is further understood that such a driver may be located within the housing **13** or external to the housing **13**, and may be operably connected to the QCL by any known means. Such a driver may include a pulse generator, amplifier, pulse switcher, and/or any other known driver components.

[0057] In further exemplary embodiments of the present disclosure, the light sources **14**, **16** may comprise one or more carbon dioxide lasers. Such lasers may be useful in any of the law enforcement, combat, reconnaissance, and/or other applications described herein. In still a further exemplary embodiment of the present disclosure, one or more of the light sources **14**, **16** may comprise a short wavelength infrared laser (SWIR). Such a laser may emit a signal or beam having a wavelength between, approximately 0.9 μm and approximately 2.5 μm.

[0058] It is also understood that, in exemplary embodiments in which the light source **14**, **16** comprise a QCL, such a QCL can be tuned to provide a signal or beam having a specific wavelength, and/or to provide a signal having a pulse or other signature easily recognizable by U.S. or other friendly/allied forces. Tuning of the signal or beam emitted by the QCL can be accomplished by any known means such as, for example, by locating a diffracting grating in the signal or beam path. Such a grating can be adjustable to allow selected transmission of a plurality of wavelengths, or fixed to transmit only a single wavelength. Although the signature of the beam, pulse, or signal emitted by the QCL may be preset, the signature, wavelength, frequency, pulse pattern, and/or other identifiable and distinguishable characteristics of the signal or beam may be easily tunable in the field and/or during use. These characteristics may be useful in friend or foe identification and other applications. In addition, to this grating, the driver discussed above may also be configured to assist in tuning and/or otherwise controlling the output of the QCL.

[0059] FIG. **15** illustrates an exemplary sight assembly **100** including, for example, more than two light sources **14**, **16**. As shown in FIG. **15**, the sight assembly **100** may include a first light source **14**, second light source **16**, third light source **23**, and fourth light source **25**. Although the sight assembly **100** illustrated in FIG. **15** includes four light sources, it is understood that other exemplary sight assemblies of the present disclosure may include three such light sources or five or more light sources. The light sources **14**, **16**, **23**, **25** shown in FIG. **15** may comprise any of the variety of different light sources described above with respect to light sources **14**, **16**. In particular one or more of the light sources **14**, **16**, **23**, **25** may comprise a QCL.

[0060] The housing **13** of the foregrip **12** can be, for example, substantially fluid-tight such that the light sources **14**, **16**, **23**, **25** can be operable in wet conditions. In an exemplary embodiment, the foregrip **12** may be rated for substantially complete submersion in a liquid for a period of at least thirty minutes. In such an exemplary embodiment, the liquid may comprise, for example, fresh water or salt water. The assembly **10** may also be configured to withstand a substantial level of shock, vibration, and/or other contact typical of rugged use. For example, the assembly **10** may be configured for use in harsh environments such as, for example, jungles, swamps, deserts, rocky terrain, and/or other law enforcement, combat, or self-defense environments. In an exemplary embodiment, the assembly **10** may be configured to successfully pass National Institute of justice drop tests, and may meet or exceed all applicable military specifications.

[0061] An adjustment assembly **22** can be disposed proximate the light sources **14**, **16**, **23**, **25** and can be configured to position the light sources **14**, **16**, **23**, **25** relative to the foregrip **12**. The adjustment assembly **22** can also be configured to position the light sources **14**, **16**, **23**, **25** relative to each other. In an exemplary embodiment, the adjustment assembly **22** may be configured to position the light sources **14**, **16**, **23**, **25**, in unison, relative to the foregrip **12**. The adjustment assembly **22** may be useful in adjusting the path of the light beams **19**, **21**, **66**, **68** emitted by the light sources **14**, **16**, **23**, **25**, and exiting the housing **13**.

[0062] To assist in adjusting the beam paths, the adjustment assembly **22** may be configured to manipulate the light sources **14**, **16**, **23**, **25** in any useful direction such as, for example, in the direction of arrows **36**, **38**, **40**, **42** (FIGS. **11**, **17**, and **1 8**). In addition, the adjustment assembly **22** may be

configured to rotate the light sources **14**, **16**, **23**, **25** in the clockwise direction of arrow **44** and/or in the counterclockwise direction of arrow **46**. Accordingly, two or more of the light sources **14**, **16**, **23**, **25** may be aligned in unison (i.e., co-aligned) or, alternatively, the light sources **14**, **16**, **23**, **25** may each be aligned independently. For example, the adjustment assembly **22** may be used to align or otherwise calibrate a light source operating in the visible spectrum to a desired impact point of the firearm **52**. The adjustment assembly **22** may then be used to align a QCL or other light source to the same impact point as the visible spectrum light source. In this way, the adjustment assembly **22** may be used to calibrate and/or align each of the light sources **14**, **16**, **23**, **25** relative to one another.

[0063] In an exemplary embodiment in which the light sources **14**, **16**, **23**, **25** comprise a QCL, the QCL may be co-aligned with one or more of the other light sources operating in the visible spectrum (approximately 0.4 μm to approximately 0.7 μm). In such an exemplary embodiment, the adjustment assembly **22** may enable the user to align the QCL and the visible spectrum light source at the same time. Thus, the separate beams emitted by the various light sources **14**, **16**, **23**, **25** may be aligned to converge at the impact point of the firearm **52** with a single adjustment. In such an exemplary embodiment, the adjustment assembly **22** may also be used to align or calibrate these separate beams relative to one another as discussed above. The adjustment assembly **22** may include, for example, one or more screws, pneumatic devices, piezoelectric devices, solenoids, gears, motors, and/or other components configured to assist in positioning an optical device in an enclosed and/or portable environment.

[0064] In the exemplary embodiment shown in FIG. **1**, the adjustment assembly **22** may be manually adjusted by using one or more sight assembly adjustment tools (not shown). The sight assembly adjustment tool may be utilized to manipulate the adjustment assembly **22** when the housing **13** is closed and/or substantially sealed. In such an exemplary embodiment, the sight assembly adjustment tool may be configured to access and/or otherwise engage the adjustment assembly **22** via, for example, one or more substantially fluid-tight channels defined by the housing **13** of the foregrip **12**. In an alternative exemplary embodiment, the adjustment tool may be utilized to manipulate the adjustment assembly **22** while the housing **13** is opened and the adjustment assembly **22** is easily accessible. In still another exemplary embodiment, the adjustment assembly **22** may be electromechanically adjusted without the use of a sight assembly adjustment tool. In such an exemplary embodiment, the foregrip **12** may include one or more buttons, knobs, levers, and/or other interfaces allowing the user to electromechanically manipulate the adjustment assembly **22** and to thereby position the light sources **14**, **16** relative to the foregrip **12**.

[0065] As shown in FIGS. **11**, **17**, and **18**, when the foregrip **12** is connected to an exemplary firearm **52** of the present disclosure, at least one of the light sources **14**, **16**, **23**, **25** may be disposed along and/or otherwise aligned with a vertical axis **50** of a barrel **54** of the firearm **52**. In an additional exemplary embodiment, at least two of the light sources **14**, **16**, **23**. **25** may be disposed along and/or aligned with the vertical axis **50** of the barrel **54** when the foregrip **12** is mounted to the firearm **52**. For example, the vertical axis **50** of the barrel **54** may pass through and/or be collinear with the vertical axis of at least one of at least two of the light sources **14**, **16**, **23**, **25** when the foregrip **12** is connected to the firearm **52**. In an additional exemplary embodiment, the light sources **14**, **16**, **23**, **25** may be disposed within the foregrip **12** such that the horizontal axes **58**, **60** of at least two of the light sources **14**, **16**, **23**, **25** are positioned as close to the horizontal axis **48** of the barrel **54** as possible when the foregrip **12** is connected to the firearm **52**. In such an exemplary embodiment, the horizontal axes **58**, **60** of two or more light sources **14**, **16**, **23**, **25** may be coplanar or may be in parallel planes. Such an exemplary embodiment may assist in alleviating the barrel offset deficiencies found in prior art foregrip sight assemblies. It is also understood that the adjustment assembly **22** may be configured to move the light sources **14**, **16**, **23**, **25** in the direction of arrows **36**, **38**, **40**, **42** and/or to pivot the light sources **14**, **16**, **23**, **25** in the direction of arrows **36**, **38**, **40**, **42**, in order to achieve the configurations discussed above. Additionally, a longitudinal axis of at least one of the light sources **14**, **16**, **23**, **25** may be aligned substantially coplanar with and/or substantially parallel to a longitudinal axis of the barrel **54** by manipulating the adjustment assembly **22**.

[0066] A selection device **24** of the assembly **10** can be mounted to the foregrip **12** such that the device **24** can be actuated by a finger of the user. The selection device **24** can be configured to allow activation of the light sources **14**, **16**, **23**, **25** as desired. For example, the selection device **24** can be a switch configured to be manipulated so as to only allow activation of one of the light sources **14**, **16**, **23**, **25** at a time. Alternatively, the selection device **24** can be a button, rotatable knob, and/or other operator interface configured to select more than one of the light sources **14**, **16**, **23**, **25** for activation at one time. For example, the selection device **24** may be manipulated to select either the first light source **14**, the second light source **16**, or both of the light sources **14**, **16**, **23**, **25** for activation by the user. The selection device **24** may also have a setting for pulsed activation of the light sources **14**, **16**, **23**, **25** and a different setting for continuous activation of light sources **14**, **16**, **23**, **25**. In an exemplary embodiment, the selection device **24** may have a first setting to turn on one of the light sources **14**, **16**, **23**, **25**. In such an embodiment, the selection device **24** may also have a second setting for operating the other light sources **14**, **16**, **23**, **25** in a continuous mode, a third setting for operating the other light sources **14**, **16**, **23**, **25** in a pulsed mode, and a fourth setting in which the light sources **14**, **16**, **23**, **25** are turned off. In such an embodiment, the one of the light sources **14**, **16**, **23**, **25** may be an LED and the other light sources **14**, **16**, **23**, **25** may be a laser of the type described above.

[0067] An activation device **26** of the assembly **10** can be disposed at a front end of the foregrip **12** to allow activation of the light sources **14**, **16**, **23**, **25** selected for use. The activation device **26** can have a configuration similar to a trigger or a depressible switch. In such an embodiment, the activation device **26** may be configured to energize and/or otherwise activate one or more of the light sources in the mode specified by the selection device **24**.

[0068] In addition to controlling the light sources **14**, **16**, **23**, **25** in a continuous mode or in a pulsed mode, the activation device **26** may have two or more configurations or settings, enabling the activation and/or operation of the light sources **14**, **16**, **23**, **25** either momentarily when the activation device **26** is in a first setting or continuously when the activation device **26** is in a second setting. In an exemplary embodiment, when the activation device **26** is in the second setting, components of the activation device **26** may be in a latched configuration such that the selected light source **14**,

16, **23**, **25** may be activated without continuous manipulation of the activation device **26** by the user. In such an exemplary embodiment, the assembly **10** may be operated substantially hands-free by the user in the latched configuration. In addition, in each of the embodiments discussed herein, the activation device **26** may be operated substantially noise-free for stealth applications.

[0069] A locking assembly **28** can be disposed proximate the section of the foregrip **12** configured for mounting to the firearm, and can be configured to assist in substantially immobilizing the foregrip **12** during use and/or attachment to the firearm. The locking assembly **28** can be any conventional locking assembly known in the art. The locking assembly **28** may assist in, for example, using the foregrip **12** in combat, law enforcement, self-defense, and/or other rugged environments or applications. The foregrip **12** may also include a clamping mechanism **29** configured to assist in removably attaching the foregrip **12** to a firearm. In an exemplary embodiment, the locking assembly **28** may be a component of the clamping mechanism **29**. The clamping mechanism **29** may enable the user to mount and/or otherwise connect the foregrip **12** to any one of a plurality of commercially available mounts based on user preference. As shown in FIG. **10**, in an exemplary embodiment, the foregrip **12** may be mounted on a picatinny rail **56** of a firearm **52**. In additional exemplary embodiments, however, the foregrip **12** may be connected to other known rails such as, but not limited to, dove tail rails and T-rails. In addition, the clamping mechanism **29** and/or the locking assembly **28** may be disposed on either side of the foregrip **12** based on user preference. Such a configuration may enable the foregrip **12** to be easily removably attachable to the picatinny rail **56** or other rails of the firearm **52** between uses. In particular, the clamping mechanism **29** may be reversible in that at least a portion of the components of the clamping mechanism **29** may be disposed on either side of the foregrip **12** based on user preferences. For example, the foregrip **12** illustrated in FIG. **12** shows the clamping mechanism **29** disposed on a first side of the foregrip **12** while the foregrip **12** illustrated in FIG. **13** shows the clamping mechanism **29** disposed on the second side of the foregrip **12**. The functionality of the clamping mechanism **29** is substantially the same regardless of which side of the foregrip **12** the clamping mechanism **29** is disposed on.

[0070] The assembly **10** further includes a power source **18** electrically connected to the light sources **14**, **16**, **23**, **25**. The power source **18** can be any source of power known in the art such as, for example, one or more batteries. In an exemplary embodiment, the power source **18** can comprise a plurality of AA batteries. In an additional exemplary embodiment, the power source **18** can comprise a DL-123. The power source **18** may be, for example disposable and/or rechargeable. In an exemplary embodiment, the power source **18** may be configured to power a QCL of the type described above. Accordingly, the power source **18** may be operably connected to the driver discussed above and/or any of the control circuits described herein. Thus, the amount of power from the power source **18** directed to the light sources **14**, **16**, **23**, **25** described above may be controlled and/or otherwise varied in order to alter their output. For example, one or more of the light sources **14**, **16**, **23**, **25** described herein may be operated in different modes to conserve energy. For example, a high power mode (approximately 100% of required voltage and/or current) may be utilized during operation while a low power mode (approximately 10% to approximately 15% of required voltage and/or current) may be utilized for training and/or safety reasons. The driver and/or control circuitry described herein may be configured to effect these different modes of operation. It is understood that any type of power source **18**, preferably portable and sufficiently small in size for use with any of the firearms discussed herein, can be utilized, and such power source **18** may further include N-type batteries and/or lithium/manganese dioxide batteries.

[0071] Although FIGS. **1** and **19** illustrate a power source **18** disposed within the foregrip **12**, in additional exemplary embodiments, such as the exemplary embodiment illustrated in FIG. **16**, the power source **18** may be disposed outside of the foregrip **12**. In an exemplary embodiment, the power source **18** may be disposed on and/or otherwise mounted to the firearm **52** to which the foregrip **12** is connected. Exemplary embodiments comprising one or more QCLs may have significantly greater power requirements than other exemplary embodiments in which one or more QCLs are not used. In such exemplary embodiments, a larger power source **18** may be required, and such power source **18** may not fit, within in, for example, the housing **13** of the foregrip **18**.

[0072] The foregrip **12** can define a power source compartment **32**. The power source compartment **32** can be sized and/or otherwise configured to receive the power source **18**, and the compartment **32** can be configured such that the power source **18** can be easily removed and/or replaced by the user. The foregrip **12** can also define a storage compartment configured to store and/or otherwise receive a removable sight assembly adjustment tool. In an exemplary embodiment of the present disclosure, the storage compartment may be defined by a portion of the housing **13**. In an alternative exemplary embodiment, the storage compartment may be defined by a lid, cap, and/or other closure device of the power source compartment **32**. In such an alternative exemplary embodiment, the sight assembly adjustment tool may be stored within, for example, a cap of the power source compartment **32**.

[0073] The assembly **10**, **100** may also includes a control circuit **20** configured to control activation of the light sources **14**, **16**, **23**, **25** in response to a control signal. The control circuit **20** can comprise, for example, a first control circuit associated with the first light source **14**, a second control circuit associated with the second light source **16**, a third control circuit associated with the light source **23**, and/or a fourth control circuit associated with the fourth light source **25**. The control signal can be sent by the activation device **26** mounted to the foregrip **12**.

[0074] FIG. **8** illustrates a control schematic associated with the control of the sight assembly **10** and FIG. **14** illustrates control schematic associated with the control of the sight assembly **100**. In particular, the power source **18** can provide power to the light sources **14**, **16**, **23**, **25** via the selection device **24**. Distribution of the power provided by the power source **18** (and, thus, activation of the light sources **14**, **16**, **23**, **25**) can be governed by first, second, third, and/or fourth control circuits each of which are contained within the control circuit **20**. The control circuit **20** may include more or less than the four control circuits described herein, and the number of control circuits within the control circuit **20** may correspond to the number of light sources employed by the sight assembly.

[0075] In an exemplary embodiment, the control circuit **20** may include a universal circuit board capable of being configured to control multiple similar or dissimilar light sources

14, **16**, **23**, **25**. In such an exemplary embodiment, the circuit board may be configured at the time the assembly **10**, **100** is being manufactured. In addition, it may be desirable to maximize the output power of one or more of the light sources **14**, **16**, **23**, **25** within the limits of applicable regulations and tolerances. Such regulations and/or tolerances may be dictated by, for example, the class to which the light source belongs. Accordingly, the circuit board may enable the user to calibrate the light sources **14**, **16**, **23**, **25** such that their respective outputs are at the appropriate levels, respectively.

[0076] In an exemplary embodiment in which at least one of the light sources **14**, **16**, **23**, **25** comprises a QCL, a cooling element may be disposed in thermal contact with the QCL. FIG. **19** illustrates an exemplary embodiment in which such a cooling element **64** may be disposed within the housing **13**, while FIG. **16** illustrates an additional exemplary embodiment in which the cooling element **64** may be disposed outside of the foregrip **12** such as, for example, on a portion of the firearm **52** to which the foregrip **12** is connected. Regardless of its location, the cooling element **64** maybe employed to maintain one or more of the QCLs described herein at a desirable operating temperature. Certain configurations of the cooling element **64** may require, for example, energy input thus, in an exemplary embodiment, at least a portion of the cooling element **64** may be operably connected to the power source **18**.

[0077] The cooling element **64** may assist in cooling the QCL to a specified and/or desired operating temperature range. For example, the cooling element **64** may assist in cooling the QCL to approximately room temperature, or between approximately 65° Fahrenheit and approximately 75° Fahrenheit. The cooling element **64** may comprise a thermal electric cooler or any other cooler known in the arts. For example, the cooling element **64** may be either a passive device or an active device. Exemplary passive cooling element **64** may include, heat sinks, phase change elements, radiators, and/or one or more fins configured to dissipate thermal energy from the QCL. Active cooling elements **64**, on the other hand, may include Peltier modules, and/or Stirling devices.

[0078] In addition to the uses described herein, it is understood that the sight assemblies **10**, **100** may be used to communicate, for example, information pertaining to the location of the target, the location of friendly forces, the location of a perimeter or territory, the location of an injured or distressed soldier, and/or other useful identification or location information to one or more remote detectors or receivers. One or more of the beams, pulses, or signals emitted by the sight assemblies **10**, **100** may be used to locate, identify, and/or distinguish such targets, perimeters, troops, territories, locations, or other items of interest. A remote receiver may be configured to receive and interpret such emissions for use in the desired application. Such receivers may be located, for example, on or in the foregrip **12**, on the firearm **52** to which the foregrip **12** is attached, and/or in a remote troop base, post, or control center. Such friendly beams, pulses, or signals may be easily distinguishable from similar foe signals based on the characteristics or properties thereof. The signal, beam, pulse, and/or other emissions of the light sources **14**, **16**, **23**, **25** may be distinguished from other like emissions having, for example, like frequencies, pulse signatures, information and/or any other identifiable or distinguishable characteristics or properties. It is understood that such emissions may be in the thermal band, and that one or more receivers may comprise a thermal imager configured to receive and display such emissions for viewing.

[0079] The inclusion of light sources **14**, **16**, **23**, **25**, such as, for example, a QCL into a foregrip **12** was heretofore impractical due to the difficulties associated with operating a QCL. For instance, due to their inherent inefficiencies, known QCL chips and/or materials generate substantial amounts of heat. Such heat may make it uncomfortable to use QCLs in connection with hand-held devices, such as foregrips **12** or firearms **52**, without utilizing adequate thermal management techniques to minimize the danger of operating a QCL in close proximity to the operator. An exemplary method of minimizing this risk is to pulse the QCL during operation as opposed to leaving it on continuously. Alternatively, as will be discussed below, one or more heat shields may be employed.

[0080] In addition, QCLs are particularly sensitive to heat and must be maintained at a relatively low temperature for peak efficiency. As a result, it may be desirable to mount, locate and/or operate QCLs as far away from sources of heat as possible. Since barrels and/or other components of firearms produce significant amounts of heat during use, operating a QCL in the proximity of such components is not generally acceptable.

[0081] The sight assemblies **10**, **100** described herein overcome these obstacles, and many of the deficiencies of known sight assemblies, by utilizing a robust power supply sized for use with a QCL and/or by providing for cooling of the QCL during operation. Such cooling can be achieved through the use of a cooling element **64** thermally connected to the QCL and operative to maintain the QCL at a desirable operating temperature for peak efficiency.

[0082] To assist in thermally insulating the QCL from the barrel or other components of the firearm **52** that may be at elevated temperatures, and to thermally insulate the operator from the QCL itself during use, the sight assemblies **10**, **100** described herein may also employ a thermal barrier between, for example, the QCL and the barrel **54** and/or rail **56** of the firearm **52**. Such a barrier may be created by, for example, distancing the QCL from the barrel **54** and/or the rail **56**. In addition, any of the cooling elements **64** may assist in forming such a barrier, and one or more heat shields **70** may be also be utilized to form such a barrier. Such heat shields **70** may insulate the QCL from, for example, the barrel **54**, and may further assist in maintaining the QCL within its peak operating temperature range. Such heat shields **70** may also insulate the QCL from, for example, the hand of a soldier using the firearm **52** to which the foregrip **12** is attached.

[0083] The heat shields **70** may comprise an insulating foam, gel, fabric, honeycomb-like structure, or other like material or structure configured to block the transmission of heat to and/or from the QCL. In an exemplary embodiment, a honeycomb-like structure may be at least partially filled and/or otherwise combined with an insulating foam, gel, fabric, or other like material to form a heat shield **70**. It is understood that any combination of the above materials or structures may be employed in the exemplary heat shield embodiments described herein.

[0084] One or more heat shields **70** may be disposed between the QCL and the barrel **54** or rail **56** of the firearm **52** to which the foregrip **12** is attached. A heat shield **70** may be disposed within the foregrip housing **13** or external thereto. For example, a heat shield **70** may be disposed proximate and/or connected to the underside of the barrel **54** external to

the foregrip housing **13**. Such a heat shield **70** may extend along at least a portion of the barrel **54**. In another exemplary embodiment, a heat shield **70** may be disposed proximate or connected to a top portion of the housing **13**, either internal or external thereto. For example, as shown in FIG. **20**, a heat shield **70** may be disposed external to the housing **13**, between the housing **13** and the mount **28**.

[0085] In another exemplary embodiment, a heat shield **70** may be thermally connected to the QCL within the housing **13**, and/or may be disposed between the QCL and one or more walls of the housing **13** to substantially prohibit heat from passing from the barrel to the QCL. A heat shield **70** may substantially surround the QCL on one, two, three, or more sides. In an additional exemplary embodiment, a heat shield **70** may substantially surround the entire QCL within the housing **13**. In such an exemplary embodiment, the heat shield **70** may still permit the QCL to emit a beam, pulse, or signal as desired. In addition, a heat shield **70** may be positioned to block heat from passing from the QCL to the hand or other body part of an operator during use. Accordingly, at least a portion of the heat shield **70** and/or an additional heat shield **70** may be disposed between, for example, the QCL and the portion of the housing **13** grasped or held by the operator during use. In an exemplary embodiment, one or more heat shields **70** may substantially conform to an interior surface or portion of the housing **13**. For example, one or more heat shields **70** may be connected to and/or supported by one or more walls of the housing **13**.

[0086] Other embodiments of the disclosed assembly **10**, **100** will be apparent to those skilled in the art from consideration of this specification. For example, additional embodiments of the disclosed assembly **10** may include a shot counter configured to indicate the number of times the firearm has been discharged. It is intended that the specification and examples be considered as exemplary only, with the true scope of the invention being indicated by the following claims.

1. A sight assembly removably attachable to a firearm, the sight assembly comprising:
(a) a foregrip;
(b) a quantum cascade laser disposed within the foregrip; and
(c) a power source operably connected to the quantum cascade laser.

2. The assembly of claim **1**, further including a heat shield disposed between the quantum cascade laser and a portion of the foregrip.

3. The assembly of claim **1**, wherein the quantum cascade laser produces a beam having a wavelength between approximately 2 μm and approximately 30 μm.

4. The assembly of claim **1**, further including a heat shield disposed between the quantum cascade laser and a barrel of the firearm.

5. The assembly of claim **1**, wherein the power source is disposed external to the foregrip.

6. The assembly of claim **1**, further including a cooling element thermally connected to the quantum cascade laser.

7. The assembly of claim **6**, wherein the cooling element is active.

8. The assembly of claim **6**, wherein the cooling element is disposed within the foregrip.

9. The assembly of claim **1**, further including a second light source with the foregrip different than the quantum cascade laser.

10. A sight assembly removably attachable to a firearm, the sight assembly comprising:
(a) a quantum cascade laser adjustably mounted within a foregrip;
(b) a second light source disposed within the foregrip; and
(c) a power source electrically connected to the quantum cascade laser and the second light source.

11. The assembly of claim **10**, wherein a position of the second light source is adjustable relative to a position of the quantum cascade laser.

12. The assembly of claim **10**, further including an adjustment assembly configured to position the quantum cascade laser and the second light source relative to the foregrip.

13. The assembly of claim **12**, wherein the adjustment assembly positions the quantum cascade laser in unison with the second light source.

14. The assembly of claim **10**, further including a cooling element thermally connected to the quantum cascade laser.

15. The assembly of claim **10**, wherein the power source is disposed external to the foregrip.

16. The assembly of claim **10**, wherein a position of at least one of the quantum cascade laser and the second light source can be adjusted while the foregrip is connected to the firearm.

17. A sight assembly for a firearm, comprising:
(a) a quantum cascade laser disposed within a foregrip; and
(b) a second light source disposed within the foregrip, a vertical axis of at least one of the quantum cascade laser and the second light source being co-linear with a vertical axis of a firearm barrel when the foregrip is attached to the firearm.

18. The assembly of claim **17**, wherein the quantum cascade laser and the second light source are aligned with the vertical axis of the barrel.

19. The assembly of claim **17**, further including a third light source disposed within the foregrip, a horizontal axis of the third light source being collinear with a horizontal axis of at least one of the quantum cascade laser and the second light source.

20. A sight assembly for a firearm, comprising:
(a) a foregrip;
(b) a first light source disposed within the foregrip, the first light source emitting a beam having a wavelength between approximately 2 μm and approximately 30 μm; and
(c) a second light source different from the first light source adjustably mounted with respect to the first light source within the foregrip.

21. The assembly of claim **20**, wherein the second light source emits a beam having a wavelength between approximately 0.9 μm and approximately 2.5 μm.

* * * * *